A DIRECT METHOD OF MEASURING POWER IN COMMUNICATION CIRCUITS

by

HOWARD PAUL BECKENDORF

A THESIS

submitted to the

OREGON STATE AGRICULTURAL COLLEGE

in partial fulfillment of
the requirements for the
degree of

MASTER OF SCIENCE

June 1935

19 July 35 Grigsby Author 7,72 Library est. 7.45

APPROVED:

Associate Professor of Communication Engineering

In Charge of Major

Head of Department of Electrical Engineering

Chairman of School Graduate Committee

Chairman of College Graduate Council.

INDEX

A DIRECT METHOD OF MEASURING POWER IN COMMUNICATION CIRCUITS

SYNOPSIS

This paper covers an investigation of a direct method of measuring power in communication circuits by the application of the quadrant electrometer. This electrostatic device has been used commercially to a limited degree over a period of years to measure current, voltage and power, the magnitudes of which have usually been many times those used in communication work. The physical design of the conventional laboratory electrometer was considerably altered to make the device compact and portable. This paper also includes the theory of operation of electrostatic measuring apparatus and describes a commercially practicable instrument.

The purpose of this investigation was to determine the suitability of an electrostatic wattmeter for the measurement of power in communication or other circuits operating at low power levels and at frequencies at least within the audio range.

It was found that the instrument as constructed was sensitive to power as low as a few milliwatts, and that at the audio frequencies investigated it indicated the true power of the circuit regardless of the phase angle or proportionality of current to load resistance. Furthermore, since the power taken from the circuit to operate the wattmeter was negligible the original circuit conditions were not appreciably affected by its use.

INTRODUCTION

General

At the present time power is seldom measured directly in communication circuits although such measurements can be made with a low voltage cathode ray oscillograph (2). Several thermionic-tube power-measuring devices and special circuits (3,6,11,26,27) have also been developed for this purpose. These methods have not had wide use, however, because they are essentially laboratory instruments and as such are not portable or practicable for commercial work in the field since they do not give an immediate, continuous, direct reading such as is obtained with the conventional type of power wattmeter. The dynamometer type of power wattmeter takes many times the power in most communication circuits to operate the moving element and is therefore not applicable to low-level circuits.

Power in communication circuits is usually determined indirectly by measuring the current flowing through, or voltage across, a circuit of known constants and then substituting these values in a power equation (2). In an alternating-current circuit where the current and voltage are usually out of phase by some angle θ, the power dissipated is equal to the product of the voltage and in-phase component of current, $P = EI \cos \theta$. The current through a known value of resistance can be measured with a thermocouple instrument, or the resistance, if unknown, can be measured with a conventional or a modified Wheatstone bridge circuit, and the power determined by $P = I^2R$. Sometimes, how-

ever, the resistance is difficult to measure; for example the resistance offered by a loudspeaker varies with the current used and the existing acoustical conditions. Thus it can be seen that there exists a very definite need for a simple, continuously indicating, direct-reading wattmeter for communication work, a fact which is substantiated by the statement of an engineer (4) of one of the outstanding manufacturers of radio and electrical laboratory apparatus: "We do not know of a wattmeter of the conventional type which can be used to measure low power at audio frequencies. So far as we know nothing of the sort is available on the market. There is, however, a very definite field for a very simple and fool-proof wattmeter."

The requirements of such an instrument are four in number:

1. The instrument must be accurate.
2. It should be versatile in application and direct and simple in operation.
3. The power taken by the instrument should be negligible compared to the power level of the circuit.
4. It should be portable and self-contained.

In selecting the type of movement for a direct-reading wattmeter to measure low power at audio frequencies the electrometer principle was selected because it met the third requirement more satisfactorily than did the dynamometer type of instrument. In general (24) the electrostatic method for the measurement of power has several advantages over the dynamometer method, the chief ones being:

1. A single instrument may be used for currents and voltages

of any magnitude.

2. The current taken by the voltage circuit is exceedingly small, being for normal frequencies less than one microampere.
3. The instrument has no frequency error.
4. Its sensitivity can be increased many times when it is used for measurements at very low power factors by increasing the voltage drop across the quadrants.

Historical

The electrometer has been used in various forms since the early part of the nineteenth century when T. G. Behrens (13) devised the symmetrical electrometer in 1806, which was later modified by J. G. von Bohnenberger. Until 1857 the quadrant electrometer was very different from the instrument used today by the physicist. It was formed of a semi-circle (20) (although only one quadrant was ever used), usually of ivory divided into degrees and minutes from 0° to 180°, the graduation beginning at the bottom of the arc. The index consisted of a straw moving on the center of the disk and carrying, at the other extremity, a small pith ball. It was supported by a perpendicular pillar of brass or other conducting substance. When the instrument was in a perpendicular position and not electrified, the index hung by the side of the pillar, perpendicular to the horizon, but when the prime conductor was electrified it imparted the same kind of electric charge to the index, repelled it, and caused it to rise on the scale toward an angle of 90°

or to a position at right angles with the pillar. The angle of repulsion measured on the graduated arc supplied a rough estimate of the magnitude of the voltage (16).

In 1857 (13) Lord Kelvin turned his great mathematical and inventive skill to the subject of electrometers and produced two forms which have persisted with only detailed improvements to the present day. The first form was derived from the attracted disc electrometer but had the very important addition of a "guard ring" which made its indications of absolute value.

The second type of electrometer was developed from the symmetrical electrometer mentioned above. In this type a single gold leaf was suspended midway between two vertical metal plates between which a battery was connected. When a voltage was applied to the leaf it moved toward the plate of opposite polarity, the magnitude of its movement being read on a scale calibrated to indicate volts. Lord Kelvin (13) greatly improved this type of instrument in his quadrant electrometer, the essential features of which are shown in Figure 1. A flat circular metal box was cut into four equal sections or quadrants, A, B, C, D, and each section supported on an insulating pillar and provided with a terminal, the opposite quadrants A and D, and B and C being electrically connected. A light, flat, figure-of-eight shaped aluminum vane, U, shown by the dotted lines, was suspended by a bifilar cocoon-silk suspension exactly in the center of the quadrants and normally symmetrically between them as shown. Conduction to the moving vane was by means of a fine platinum wire hanging from the center of the vane and dipping into sulphuric acid.

FIGURE I.

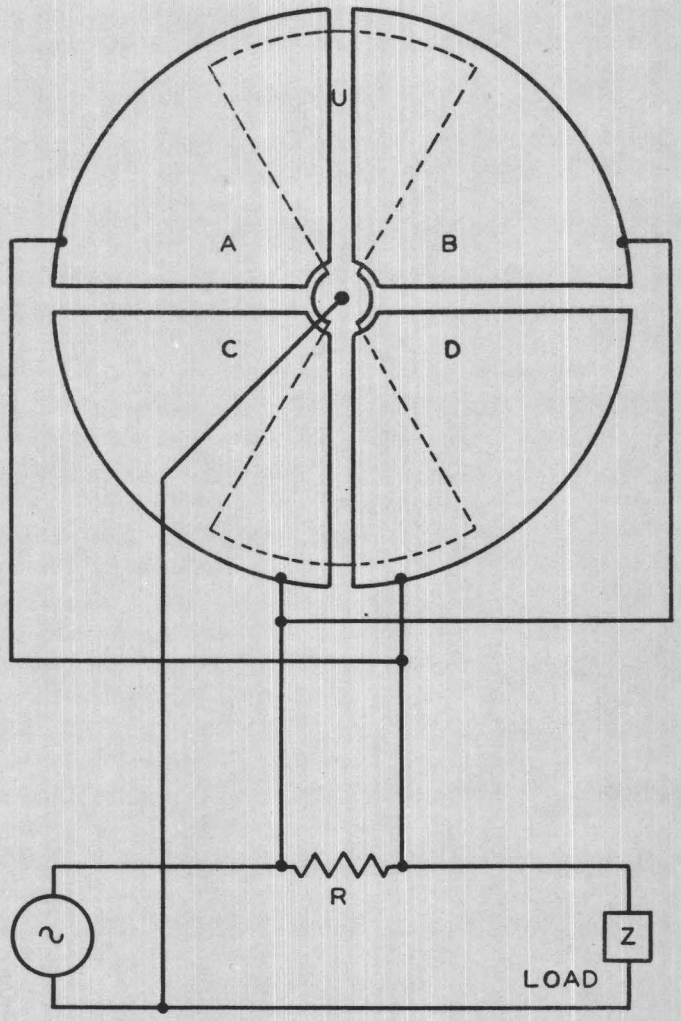

FUNDAMENTAL ELECTROMETER CONNECTIONS FOR MEASURING POWER.

The invention of the quartz fiber by Professor C. V. Boys has enabled quadrant electrometers to be made of much greater sensitiveness owing to its extremely small and constant control. Among them that of Dr. F. Dolezalek (8,9,10) has been very successful because of its high sensitivity and low electrostatic capacity.

Specific Problem

Owing to the care required in its use the ordinary quadrant electrometer is seldom employed except for laboratory purposes (21). Since the sole support for the moving vane is the fiber suspension at its center, the instrument must be accurately leveled and the vane perfectly balanced and centered between the quadrant leaves. For a practical communication wattmeter, especially to answer requisite number four, that of portability, the free suspension type of electrometer was out of the question. Accordingly two fundamentally different methods of support were tried, first a suspension type with guiding jewels both at the top and bottom of the vane-mounting shaft, and second, a coiled hairspring type with jewel guiding and supporting bearings. The former instrument was quite irratic in electrical characteristics and relatively insecure mechanically. The latter type with cap and ring jewel pivot supports had enough friction to make it very inconsistent in reading and in returning to zero, and was not as sensitive as seemed necessary to make a usable device. When cone pivots and cone jewel bearings were substituted, the instrument performed quite satisfactorily.

THEORY OF THE QUADRANT ELECTROMETER

General

The quadrant electrometer depends upon electrostatic repulsions and attractions for its torque. When two parallel, plane metal surfaces are at a distance d centimeters apart, they attract or repel each other with a force $F = V^2A / 8\pi d^2$, where F is in dynes, V is the difference of potential in electrostatic units, and A the area of one plate in sq. cm., the effect of the edges being neglected.

The order of magnitude of the forces available in instruments of the electrostatic type (14) may be illustrated by the following example:

Let $A = 40$ sq. cm.

$V = 35$ volts

$d = 0.4$ cm.

$V = 35$ volts $= 35 \times 10^8$ electromagnetic units

$= (35 \times 10^8) / (3 \times 10^{10})$ electrostatic units

$= 0.117$ electrostatic units

$$F = V^2A / 8\pi d^2 = \frac{(0.117)^2 \times 40}{8 \times 3.1416 \times (0.4)^2} = 0.136 \text{ dyne.}$$

Considering one gram to be equal to 980 dynes this force is comparable to the weight of 0.14 milligram. The forces available to operate instruments of this nature are therefore very small and an exceedingly sensitive moving element is necessary to obtain usable deflections.

The theory of the quadrant electrometer was developed by J. C. Maxwell (18) who obtained the relation between the deflection and the

potentials of the moving vane (or needle) and quadrant pairs. The deflection depends upon the forces of attraction and repulsion between the charges on the vane and the quadrants, and the counter torque produced by twisting the suspension, or in this case, bending a coiled hairspring. When the instrument is connected as a voltmeter it may be used idiostatically or heterostatically but when used as a wattmeter to indicate power the latter method must be employed (17).

Let V_1 and V_2 be the potentials of the two sets of quadrants and V_3 the potential of the moving vane, V_3 generally being greater than V_1 or V_2. If c is the capacitance per unit angle of the condenser formed by a portion of the vane within the quadrant, and the deflection of the vane is increased by $d\theta$, so that an angular portion $d\theta$ passes from each quadrant of one pair to the quadrants of the other pair, then the corresponding increment of energy (14) is

$$dW = \tfrac{1}{2}c\ d\theta\ (V_3 - V_2)^2 - \tfrac{1}{2}c\ d\theta\ (V_3 - V_1)^2$$

or

$$d\theta/dW = c\ (V_1 - V_2)\ (V_3 - \frac{V_1 + V_2}{2})$$

Since $dW/d\theta$ is the moment of the force producing the deflection θ, it must be equal to the moment of torsion, or bending, resisting the deflection. The resistive moment in either type of spring may be considered proportional to the angle, for small angles, therefore

$$dW/d\theta = c_1\theta.$$

Combining the constants

$$\theta = \frac{1}{D}\ (V_1 - V_2)\ (V_3 - \frac{V_1 + V_2}{2})$$

According to Maxwell (18) D in this equation is a constant but Orlich and Schultz (15) showed that it is not a constant except for very

small deflections and for some special electrometers. In most electrometers D varies with the vane potential and the potential difference between the quadrants. When the electrometer is used as a deflection instrument this variation must be taken into account, and Kouwenhoven (15) expanded the simple equation into one which contains ten constants and described in detail their experimental determination. Since the electrometer in this investigation is not being used as a separate deflection instrument but as an integral part of a circuit adjusted and calibrated to read power, the theory of constant determination will not be included here.

The Electrometer as an Electrostatic Wattmeter

When the quadrant electrometer is used to measure the power taken by a load the readings are modified by the effect of the power expended in the resistance R, Figure 1, used for obtaining the necessary potential difference across the quadrants. The general theory of the quadrant electrometer used as an electrostatic wattmeter leads to the equation (22)

$$W = NK\,(D/R) + \tfrac{1}{2}(N - 2)\,RA^2$$

where W = watts expended in the load in which the power factor may have any value,

$N = (R_1 + R_2) / R_2$ = multiplying factor of the dividing resistance used to supply the vane; R_1 = resistance between vane connection and one side of the circuit in which the power is being measured, R_2 = resistance between vane con-

nection and quadrant side of the circuit,

K = the constant of the instrument,

D = the deflection produced,

R = the resistance through which the main current passes to produce the difference of potential between the quadrants,

A = current through R.

If N = 1, the vane being supplied at the full voltage, the instrument measures half the watts lost in R in addition to the load.

If N = 2 the instrument measures the load directly, as the term depending on the energy loss in R vanishes.

If N is greater than 2 then the instrument measures 1/N of the watts dissipated in the load, less the watts lost in R multiplied by some factor. This factor is less than unity if N is less than 4, and greater if N is greater than 4. If, therefore, the power is small and the power factor low, so that the current is relatively high, the value of $\frac{1}{2}(N - 2)\ RA^2$ may be considerably greater than the effect on the wattmeter of the load energy, so that the reading of the instrument may become negative, and accurate measurement of the current has to be made in order to calculate the correction due to the energy loss in R.

In using the quadrant electrometer for laboratory work or on high voltages for the measurement of power, the very great convenience of having the instrument direct reading often leads to the choice of working with the vane at half supply voltage. N in this case being 2, the correction for the "current" resistance vanishes. However, for the measurement of power in communication circuits the value of $\frac{1}{2}I^2R$

is such a small fraction of the load power (less than one-half of one per cent), that the difference in the final result of neglecting this correction when full voltage is supplied to the vane, is far less than the accuracy of commercial electrical indicating instruments.

If the current and the voltage in the circuit being measured are out of phase the voltages on the electrostatic wattmeter will be out of phase and the deflection will be proportional to the true power rather than to the apparent power. Therefore, the deflection of this instrument will always be proportional to the actual power, $P = E\ I \cos \theta$, taken by the load.

PRELIMINARY TESTS

Experimental Procedure

The laboratory procedure used during the preliminary tests consisted largely of eliminating mechanical difficulties in the construction of the electrometer unit itself. First it was necessary to determine the sensitivity of the instrument, for, if potentials of too great a magnitude were required to obtain a readable deflection, the instrument would not lend itself for use as a portable direct-reading wattmeter for communication circuits. Of course low potentials can be amplified with a suitable vacuum-tube amplifier but extensive amplifying equipment would limit the portability of the device.

In connecting the electrometer as shown in Figure 3 separate "B" batteries and voltage dividers were used rather than substituting one battery for the oscillator in Figure 4, to limit the current taken from the batteries and also to provide a more flexible arrangement for applying any desired potential to either the vane or the quadrants. The two single-pole switches in the battery circuits were replaced with a single double-pole switch to close and open the two circuits simultaneously. The procedure used in making a preliminary test was as follows: With the battery switches closed the voltage dividers were adjusted until the d-c voltmeters indicated the desired potentials, the switches then opened and the zero reading adjusted. The battery switches were closed and the instrument deflection read and recorded, and, in those cases where there seemed an undue amount of friction, the instrument support

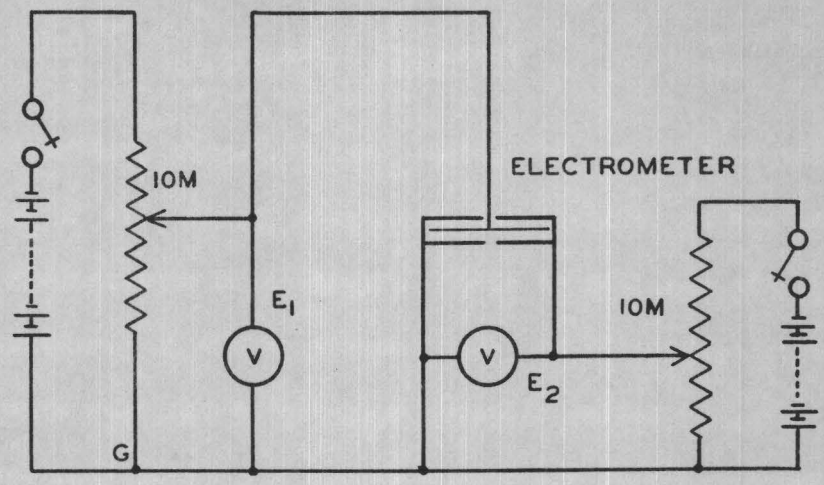

FIG. 3. D-C CIRCUIT DIAGRAM FOR TESTING ELECTROMETER SENSITIVITY.

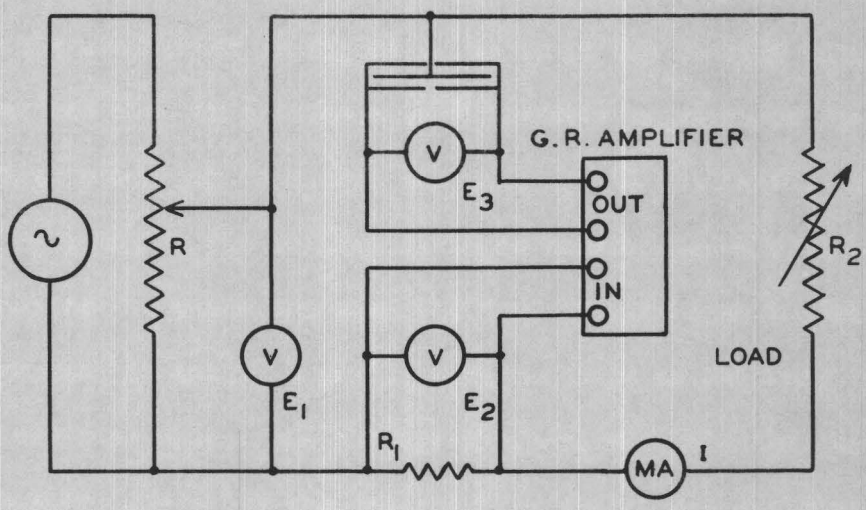

FIG. 4. PRELIMINARY A-C CIRCUIT DIAGRAM FOR ELECTROMETER FREQUENCY RESPONSE.

was jarred to obtain a more accurate reading.

Several times when the friction of the first hairspring type seemed excessive the electrometer was taken apart, cleaned, the hairspring adjusted, and then the instrument was reassembled. When it continued performing in a rather irratic manner, the home-made hairspring, which had been constructed from the original phosphor-bronze suspension ribbon, was replaced with a hairspring from a 3 inch Jewell panel-mounting thermo-couple galvanometer, on suspicion that irregularities in the former spring were responsible for the irratic deflections. This spring did not improve the operation so the instrument moving element was completely rebuilt, changing the watch-type pivots and jewels to cone pivots and jewels.

The procedure for the thirty-six tests with direct current on this last arrangement was very similar to that described above for the previous type of vane balance. Comparisons were made between deflections obtained with the vane momentarily grounded when the potential switch was opened and deflections with the vane ungrounded. There was little or no difference in the maximum deflections but a slight difference was noted in the manner in which it returned to zero, the former procedure producing the best results.

Discussion

The first preliminary test with the suspension type electrometer which produced positive results was made merely to ascertain the approximate magnitude of the potentials required to move the vane from rest.

The apparatus was connected to direct voltages as shown in Figure 3. Table I shows the results of this test and illustrates the fact that the zero position of the vane with respect to the quadrants is important in determining the starting potentials, the third position being best from this standpoint.

Table I

A definite movement of the vane was first perceived at the following potentials (referring to Figure 3):

Zero Position	E_1 in volts	E_2 in volts
1. 	90	35
	75	25
2. 	60	15
	45	30
3. 	45	20
	75	12
	90	8
4. 	75	15
	90	11

The second test with the suspension system was made with alternating current to determine the amount of deflection obtainable with various potentials and frequencies. The electrometer was connected to a load in the conventional manner for power measurement, with the addition of a voltage amplifier for the quadrant potential, Figure 4. A scale and light source, which were used to indicate deflections, were located 30 inches from a mirror on the electrometer shaft. Because of side friction of the guiding jewels on the vane balance staff due to slight bending moments in the suspension ribbon, the results were quite irratic, the vane not returning to zero or indicating consistent values of deflection as shown in Table II below.

Table II

Data to illustrate the inconsistent results obtained with the ribbon suspension type of portable instrument. Referring to Figure 4:

Freq. in cycles	E_1-volts	E_2-volts	E_3-volts	I-ma.	Deflections Sw.Cl.	Sw. Op.
100	25	0.1	15	1	9.0	5.75
500	25	0.1	15	1	8.5	4.50
500	25	0.2	20	1	17.0	9.50
500	25	0.2	20	1	20.5	10.50
500	25	0.2	20	1	19.0	10.00
5000	25	0.2	18	1	16.5	8.00
5000	25	0.2	18	1	17.0	9.75
5000	25	0.2	18	1	20.5	10.00

After the electrometer unit had been changed from a suspension type instrument to a hairspring type, with the same guiding jewels and the addition of a single cap jewel at the bottom of the balance staff to support the vane element, a preliminary test was made on direct current using the circuit of Figure 3, for the same purpose as the first test on the suspension instrument. The results were quite similar to those in Table I except that in general higher values of potential were required and it was necessary to tap the instrument support in order to start the vane moving. It was evident that the jerky and irratic movement was due to some such cause as dirt in the bearings, too large surfaces in contact at the pivots, uneven spring torque, cracked jewels, or bent balance staff pivot. Upon investigation the last named trouble was found to exist and was accordingly corrected.

With this type of construction nineteen different tests were run during which time numerous minor changes were made in an attempt to remove the cause of the irregular and inconsistent readings. The circuit

of Figure 3 was used with minor additions such as grounding point, G, and providing a grounding switch for the vane to discharge the electrometer between readings, the potential E_1 being removed during the process of discharge. The changes made to the instrument itself consisted of removing damping magnets, adding leveling screws on the feet, cleaning and re-adjusting the hairspring several times, and finally replacing the hairspring as already mentioned. In most of these tests it was necessary to tap or jar the instrument support repeatedly in order to obtain data, which at best were too inconsistent to be of value. The only data which were obtained without disturbing the instrument are recorded in Table III as illustrative of the best results obtained with this type of moving element support.

Table III

Data obtained with "watch-type" pivots and jewels using a coiled hairspring. The "Switch Open" column is included to illustrate the scale reading to which the indicator returned with zero potential. Circuit of Figure 3.

E_1 = 60 volts, E_2 = 25 volts.

Deflection	Switch Open	Deflec.	Switch Open	Deflec.	Switch Open
10.5	0	12.5	-1.0	15.0	-3.4
11.0	-0.5	14.0	-0.5	15.1	-3.3
13.0	0	12.4	-0.7	15.3	-3.4
12.0	-1.0	14.3	-2.0	15.0	-3.4
12.2	0.3	14.0	-2.5	15.3	-2.1
11.5	-1.5	14.7	-3.4	15.3	-1.6
11.3	0.2	15.2	-3.2	14.5	-1.4

After the balance system was changed to the cone-pivot, cone-jewel type, a series of thirty-six tests was run using d-c potentials, with the apparatus connected as shown in Figure 3. These tests were performed to determine the sensitivity and reliability of the instru-

ment with numerous combinations of potentials ranging from 15 to 80 volts on the vane and from 5 to 40 volts on the quadrants. Although most of the tests were run with the vane potential higher than the quadrant potential, very satisfactory deflections were obtained with these potentials equal or in reverse order.

During these preliminary tests a number of changes was made to improve the performance of the electrometer which included reshaping the cone pivots, substituting three hairsprings of different size, strength and material, and trying two kinds of fine wrist-watch oil on the bearings. Owing to the sensitivity of the final arrangement the lightest grade of oil reduced the deflection to about one-fourth the original value, so the oil was carefully removed with a high grade cleaner. In Table IV is summarized the results of the thirty-six preliminary tests on the instrument with this third type of construction, i.e., cone jewels, cone pivots and hairspring counter torque.

Table IV

Data obtained with cone bearing instrument on direct current. Referring to Figure 3; scale distance one foot.

E_1 in volts	E_2 in volts	Deflec. in cm.	Remarks
80	40	1.0	Hairspring No.1
60	25	8.5	" No.2
80	40	17.0	
70	35	15.0	" No.3
70	35	3.5	Oil on pivots.
70	35	15.7	Oil removed.
80	10	2.5	Hairspring adjusted
25	15	1.2	
20	20	2.8	
15	25	3.4	
20	40	6.5	
70	35	15.8	
70	35	22.7	Readjusted vane position and leveled instr.

These preliminary tests showed that on direct-current the final instrument was of approximately the same sensitivity as had been the previous two types but was much more dependable in its deflections and returned more accurately to zero.

DESCRIPTION OF FINAL WATTMETER

Electrometer

As has been mentioned in the introduction the conventional laboratory, fiber-suspension type electrometer is not suitable for use as a portable instrument because it depends solely upon gravitational force to keep the vane centered and leveled in the quadrants. Accordingly, in designing an instrument for use as a portable milliwattmeter some type of supporting, centering guides were considered necessary. As previously mentioned, three different constructional designs were tried in this investigation to produce such an instrument.

The first electrometer used a fine phosphor-bronze ribbon for suspending the vane midway in the quadrant sections. The steel balance-staff, to which was fastened the figure-of-eight shape Duraluminum vane, was made with watch-type pivots which fit into an upper and a lower centering ring jewel. A pair of permanent magnets was used, one above, one below the quadrants to provide magnetic damping of the vane. As already shown this system was not satisfactory because of friction between the balance-staff pivots and the ring jewels which was accentuated by slight bending moments in the suspension ribbon.

In the second unit the same balance staff and jewels were used with the addition of a lower cap jewel to support the staff in place of the suspension ribbon from above. A fine phosphor-bronze coiled hairspring provided the resistive force, the electrical conduction to the vane, and returned the vane to zero. It was found that artificial damping was unnecessary so the magnets were removed. The fact that

this construction was almost as irratic and unreliable as had been the ribbon-suspension type indicated that ring jewels and parallel surface pivots are not satisfactory for an instrument operated by such extremely small forces.

The third and final electrometer unit was constructed with hardened steel cone pivots operating in sapphire cone jewels, the details of which can be plainly seen in the photograph of this unit with two quadrants removed, Figure 2A. Artificial damping was not used since the vane came to rest in every instance in less than 15 seconds. Complete constructional details and specifications of the electrometer will not be included here since this paper deals with an investigation of the application of a principle rather than the making of a finished instrument. If another instrument were to be constructed several improvements would be incorporated as suggested under "Recommendations". The hairspring finally adopted is of the type and size used in the smaller wrist watches and is mounted on the balance staff just above the small mirror which reflects a beam of light to a suitable ground-glass scale for indicating the deflection. The jewel mountings are of the bridge type used in high grade voltmeters and are both provided with end-play adjustments. The upper mounting has the conventional zero adjustment lever, while the lower one is provided with two-way horizontal adjustment for leveling the vane in the quadrants.

Because hard rubber has such a high electrical volumetric resistivity and low surface conductivity, it was used as bushings for mounting and insulating the quadrants, Figure 2A. Screws are provided in the feet for leveling the instrument to minimize friction in the bearings.

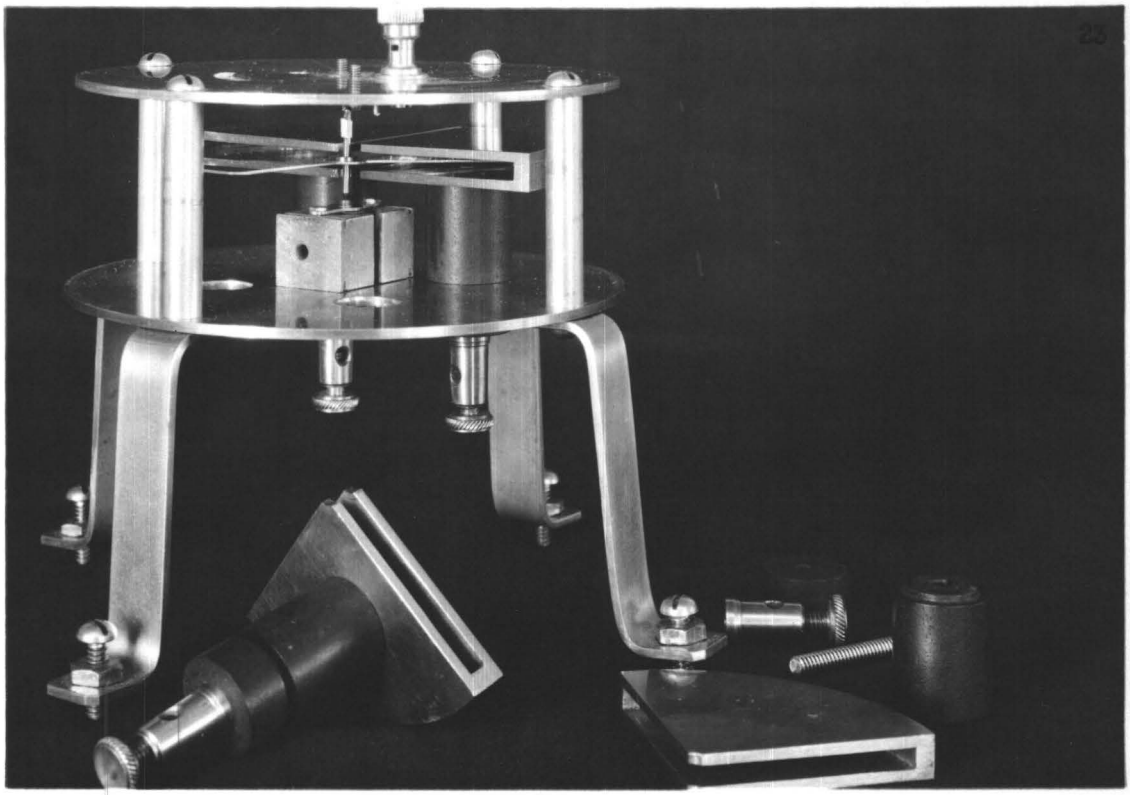

FIGURE 2A. ELECTROMETER UNIT WITH TWO QUADRANTS REMOVED.

FIGURE 2B. APPARATUS CONNECTED FOR FINAL TEST AS WATTMETER.

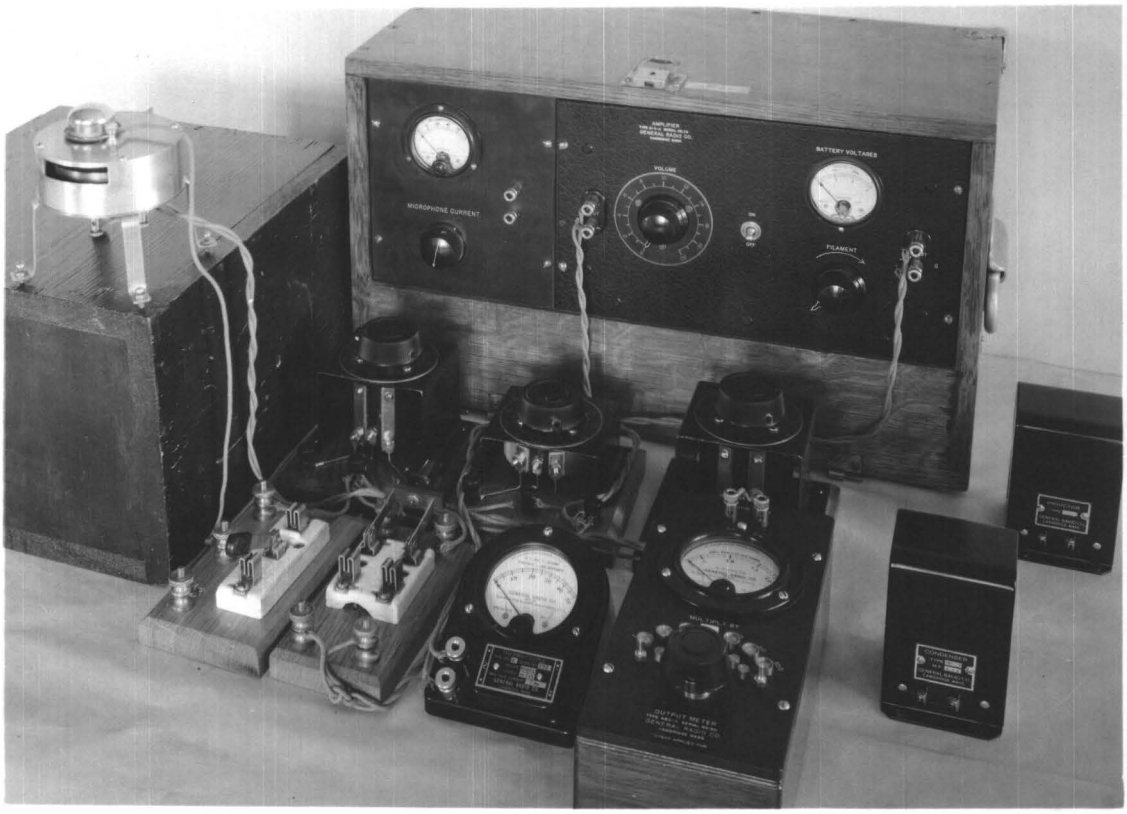

The sheet metal band and the metal cap on top, on the closed instrument, in Figure 2B, are used as electrical and physical shields to protect the instrument from stray fields, drafts and dust.

Auxiliary Equipment

The amplifier used to increase the voltage from the current resistor, R_1, Figure 5, was a standard General Radio Type 514-A, Serial No. 73, 3-stage resistance coupled amplifier using RCA 230 tubes and having essentially a constant amplification over the frequency range investigated. The input impedance was approximately 1,000,000 ohms and the maximum voltage gain used about 200. The laboratory source of power for testing was obtained from a Western Electric 8-A Oscillator, Serial No. 11450 with a range of 100 to 50,000 cycles per second.

The circuit voltage, E, Figure 5, was measured with a General Radio Output Meter, Type 483-C, Serial No. 90, using a copper-oxide rectifier and having a range of 2 to 200 volts alternating current full scale and an impedance of 20,000 ohms. The current, I, was measured with a General Radio thermocouple instrument, No. 298, with a d-c resistance of 10 ohms and a sensitivity of 500 microamperes. The thermocouple, Type 493K, Serial No. 252, with a heater resistance of 406 ohms, couple resistance of 10.7 ohms, and maximum safe current of 7 milliamperes, gave full scale deflection with a 5 milliampere current. The resistors, inductor and capacitor used in the tests were standard General Radio laboratory equipment of the values indicated on the curve and data sheets. This equipment, connected for use, is shown in Figure 2B.

DESCRIPTION OF TESTS

Frequency Response Tests

After the preliminary experimental work using d-c potentials was completed the wattmeter was connected to a laboratory oscillator as shown in Figure 4 to determine its frequency response. The method of performing this test was as follows: The oscillator was adjusted to produce the desired frequency and the voltage divider, R, adjusted until the desired value of current, I, flowed through the load R_2 as indicated on the a-c milliammeter, MA. The voltage on the electrometer vane, E_1, which is the full circuit voltage (neglecting the IR drop in the quadrant series resistor, R_1), the voltage across the quadrant series resistor, E_2, and this value amplified as applied to the quadrants, E_3, were read and recorded. The resulting deflection of the electrometer as indicated on the ground-glass scale at a distance of 15 inches was read in centimeters. The current and voltages of this circuit were held constant while the frequency was varied from 200 to 10,000 cycles per second. Five different frequency tests of this type were made to verify the theoretical attribute (24) that the electrometer deflection is practically independent of frequency; a typical set of these data is recorded in Table VI of the appendix and shown graphically by the curve of Figure 6. During these tests it was found that the a-c milliammeter was not accurate on the higher audio frequencies so a thermocouple instrument with approximately the same current range was substituted and used in its place throughout the

FIG. 6. FREQUENCY RESPONSE CURVE OF ELECTROSTATIC WATTMETER. LOAD: R=10,400 OHMS, C=3.28 MFD. CONSTANT CURRENT OF 3.5 MILLIAMPERES.

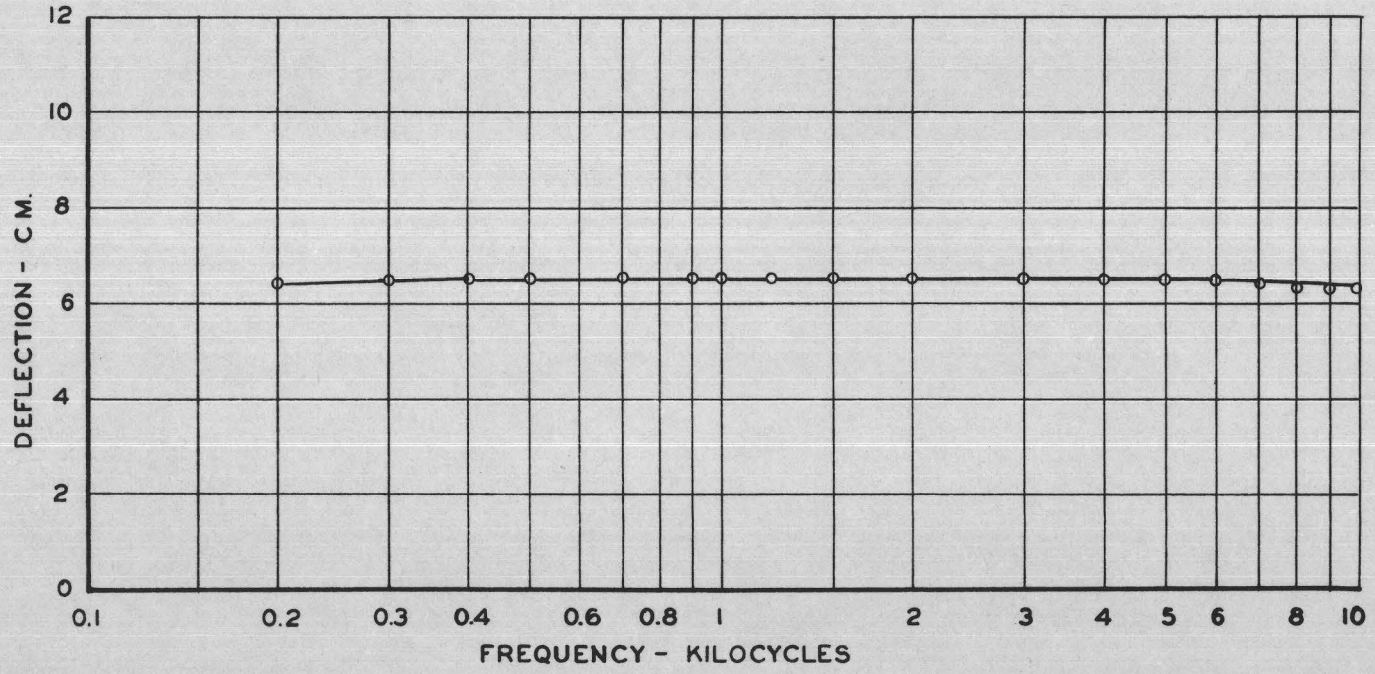

remainder of the testing.

Current Resistor Tests

The value of the series resistor, R_1, across which the voltage is proportional to the current in the circuit, should be kept as low as is consistent with good results because, first it increases the circuit load and, second, it tends to unbalance the circuit. Accordingly a test was performed to determine the value of this resistor that would be best to use for the measurement of power. The results are given in Table V; the value of 20 ohms was selected and used in the tests that follow.

Table V

Data showing results of varying current resistor, R_1.

R_1 in ohms	E_1 volts	E_2 volts	E_3 volts	I ma.	Deflec. cm.
25.0	36	0.0875	15.00	3.5	6.3
20.0	36	0.0700	12.00	3.5	5.0
10.0	36	0.0350	8.50	3.5	2.8
5.0	36	0.0175	4.25	3.5	1.4
2.5	36	0.0088	2.16	3.5	0.6

Power Measurement Tests

The final group of thirteen tests was made to calibrate the wattmeter circuit as a whole, including the General Radio amplifier, to indicate power directly at any value of power factor or load. The schematic diagram of the circuit arrangement used is shown in Figure 5, and is essentially the same as Figure 4 with minor changes in switching

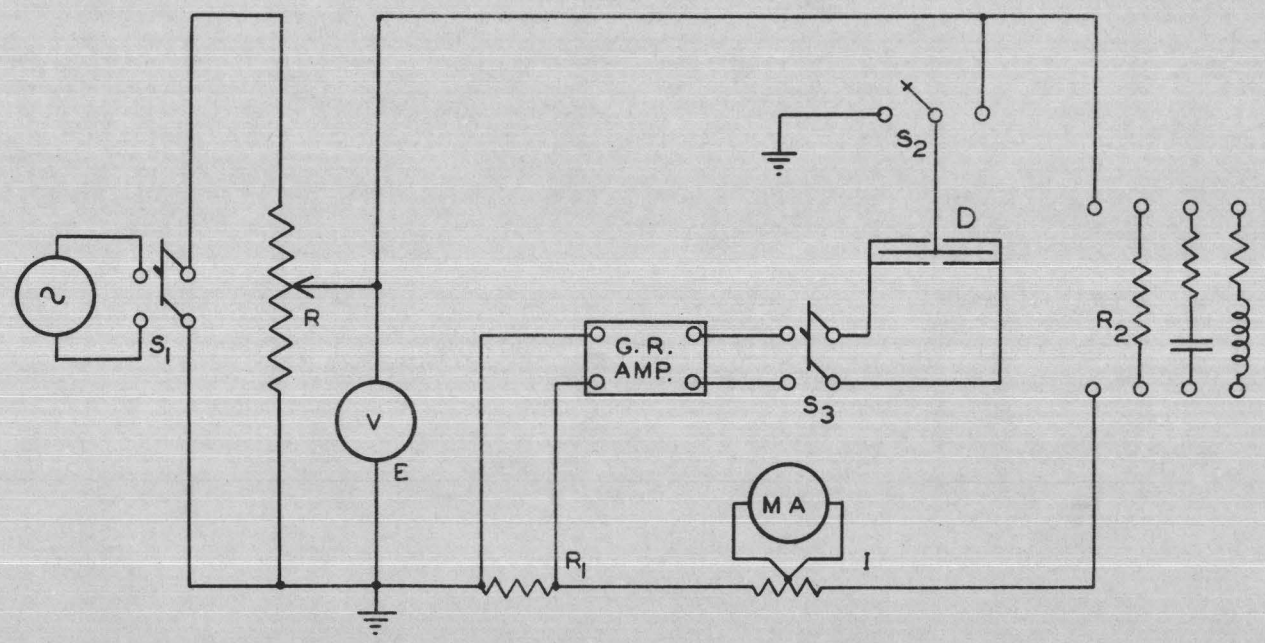

FIG. 5. ELECTROSTATIC WATTMETER CIRCUIT DIAGRAM FOR POWER MEASUREMENT.

arrangements. The quadrant voltage readings were omitted as unnecessary data in the final calibration since the resistance-coupled amplifier has a constant amplification over the range of audio frequencies used and the power in the circuit was calculated by I^2R_2 for each test. The single-pole, double-throw switch, S_2, was connected to the vane to allow the electrometer capacitance to discharge to ground after each deflection. The quadrant switch, S_3, and vane switch, S_2, were closed and opened together each time a reading was taken to completely isolate the electrometer from the remainder of the circuit so that any stray potentials would not prevent it from returning accurately to zero.

The wattmeter calibration tests can be grouped under four headings:

1. Low, medium, and high frequencies with a resistance load.
2. Low, medium, and high frequencies with a resitive and capacitive load.
3. Low, medium, and high frequencies with a resistive and inductive load.
4. Constant frequency with a load of low, medium and high resistance.

A non-inductive resistor of 5000 ohms was used for the first three tests, with a capacitor of 0.25 microfarads for the second, and an air-core inductor of 147 millihenrys for the third. The air-core inductor proved more satisfactory than one with an iron core for the purpose of this test because the effective resistance, a value which was necessary to know accurately in calculating the power dissipated

in the load, did not change with a change in frequency or current. A frequency of 200 cycles per second was used for the fourth test because the deviation in deflection was greater at this frequency than at any other over the range used in the first three tests. Values of resistance of 5000, 7500, and 10,000 ohms were used to illustrate the fact that the instrument indicates true power regardless of the proportionality of current and resistance. The data for these four tests are recorded in Tables VII, VIII, IX, and X respectively, and graphically presented in Figures 7, 8, 9, and 10.

FIG. 7. RESISTANCE LOAD, 5000 OHMS.

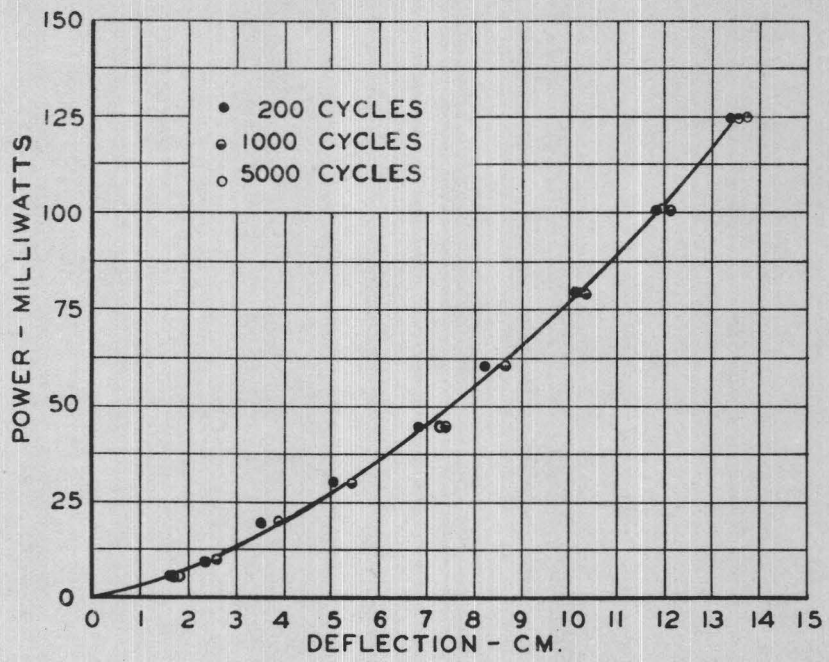

FIG. 8. CAPACITANCE LOAD, R=5000 OHMS C=0.25 MFD. PHASE ANGLES: 200∿, 32° 30′; 1000∿, 7° 15′; 5000∿, 1° 28′.

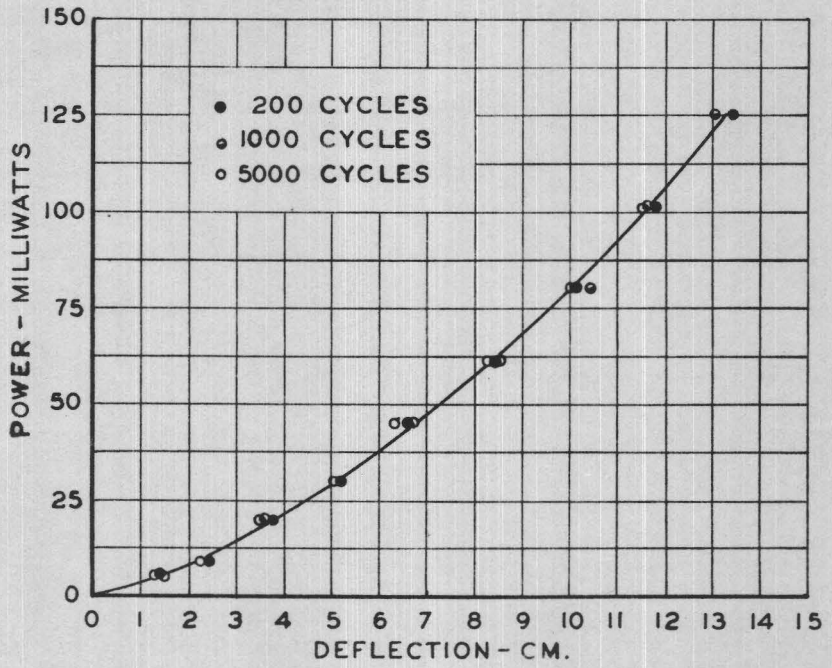

FIG. 9. INDUCTANCE LOAD, R=5000 OHMS
L=0.147 h. PHASE ANGLES: 200∿, 2° 7′;
1000∿, 10° 27′; 5000∿, 42° 45′.

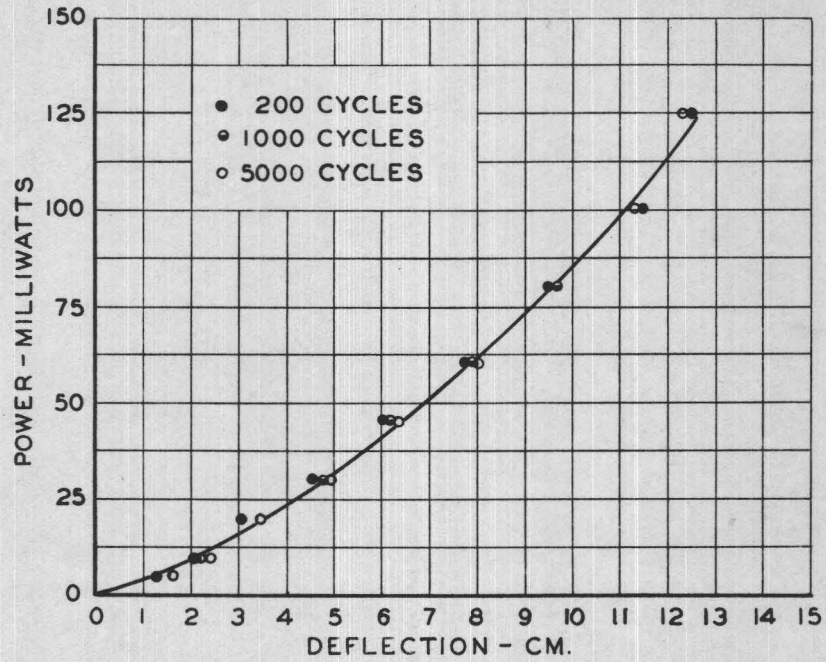

FIG. 10. RESISTANCE LOADS, 200 CYCLES.

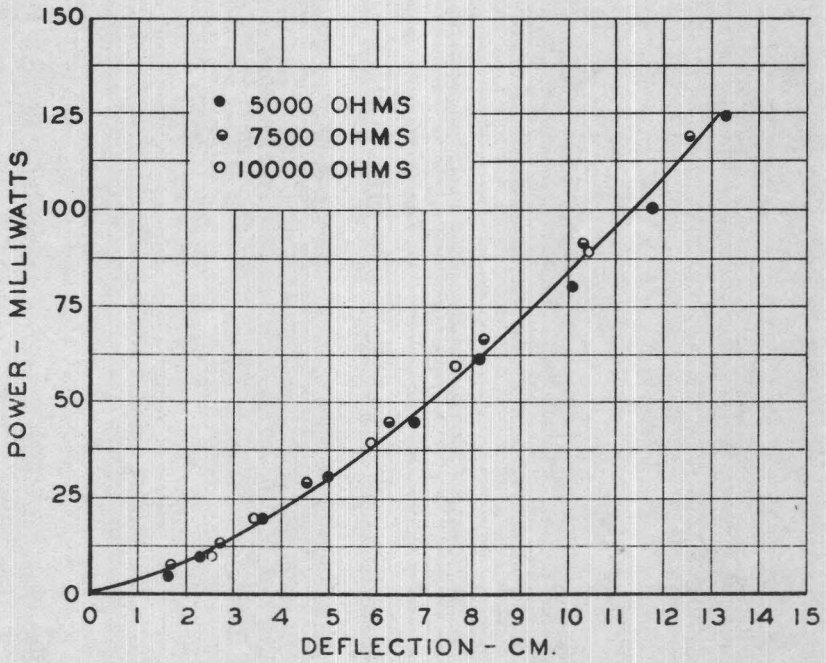

DISCUSSION OF RESULTS

Findings

The results obtained from practical tests throughout this investigation agree very well with theoretical considerations and past experience with electrometers in general. As has been pointed out, to satisfy the requirements of a practical wattmeter the power indicated by the deflection must be proportional to the true power taken by the load regardless of magnitude or sign of the phase angle between the current and voltage or the audio frequency of the source.

The data obtained in the zero position test, Table I, shows that the electrometer is most sensitive to starting potentials if the horizontal center line of the moving vane is midway between two adjacent quadrants. (moving the vane through 90° from this position would result in the same sensitivity but a movement in the opposite direction.)

For the sake of simplicity deflections were measured on the ground glass scale in centimeters and the curves have therefore been plotted in these units. The distance from the mirror to the scale was approximately 38 centimeters throughout all the final tests, and a deflection of 14 centimeters is therefore approximately equal to 20 degrees. This illustrates the fact that accurate readings could be obtained from a needle and a calibrated scale as is used in most electrical instruments.

The results of the test to determine the lowest practicable value of the series resistor, Table V, show that with as low a value as 2.5 ohms an appreciable electrometer deflection was obtained, namely 6.0 millimeters with a 3.5 milliampere current and a voltage drop across

this resistor of 8.75 millivolts. However, a 20-ohm resistor with a voltage drop of 0.07 volt was chosen for use with the amplifier employed in these tests because of a deflection of 5.0 centimeters, a value below which deflections could accurately be read when using lower values of current than 3.5 milliamperes.

The frequency response curve, Figure 6, plotted from the tabulated data, Table VI, shows that the electrometer deflections are independent of frequency between 400 and 6000 cycles per second, and that the deviation from the mean value at 200 cycles is only 1.5 per cent and at 10,000 cycles less than 3 per cent. This frequency curve was carried as high as 10,000 cycles to show that beyond the value of 5000 cycles used in the calibration curves there is very little apparent change of deflection through the maximum audio frequencies used in communication work. Although the interest in this investigation was confined to the audio range the instrument is not necessarily limited to these frequencies.

The data for the four final wattmeter calibration curves, Tables VII to X inclusive, include the circuit potential, E, although this quantity was not needed in obtaining the results but was recorded merely for reference purposes. The power data were calculated as the product of the effective resistance and the square of the current as measured with the thermocouple instrument. The three frequencies used for these tests were selected because they represent a low, a medium and a high frequency of the audio range most often used in communication circuits.

The curve of Figure 7 obtained with a pure resistance load has

a power factor of unity with zero phase angle. The data for the curve of Figure 8, with a series resistive and capacitive load, was obtained with phase angles of 32°30', 7° 15', 1° 28', respectively, for the frequencies of 200, 1000, and 5000 cycles per second. The resistive and inductive load in series, Figure 9, resulted in phase angles of 2° 7', 10° 27', and 42° 45' for the same three frequencies. The curve of Figure 7 again shows that the deflection of the electrostatic wattmeter does not vary appreciably with frequency over the lower audio range. In Figure 8 it is seen that with the current leading the voltage by three different angles the deflections are determined only by the true power taken by the load. The curve of Figure 9, plotted from data taken with the current lagging the voltage by the angles indicated, again shows that the deflections are dependent on the actual power and are not appreciably affected by the phase angle.

In Figure 10 is shown the performance of the instrument when measuring the power taken by pure resistance loads of three different values at a frequency of 200 cycles. This curve shows that the deflection of the electrostatic wattmeter depends only on the power taken and is independent of the proportionality of current to effective resistance within the limits investigated.

Although the three sets of plotted points on each of the calibration graphs do not fall exactly on the curve they are within the limits of experimental error, and probably do not coincide exactly because of unshielded circuits and the existence of stray fields. The cause of these discrepancies was not exhaustively checked because the result desired from this research was to determine the practicability of applying

the electrostatic principle to the direct measurement of power in low-level circuits, rather than to procure precise data to determine the effect of frequency, power factor and phase angle on power measurements.

The fact that the curves are not straight lines, i.e., the deflection directly proportional to the power, is not particularly a disadvantage because the scale would be laid out accordingly. However, the curves could be straightened out by changing the shape of the vane and altering other minor constructional details of the electrometer and curving the scale to form a circular arc.

The load currents varied between 1.0 and 5.0 milliamperes producing voltage drops across the 20-ohm resistor of from 0.02 to 0.10 volt. These potentials were amplified to 4.0 and 20.0 volts before being impressed between the two sets of electrometer quadrants. The voltage across the load was varied from about 5.0 to 25.0 volts and these voltages were impressed between the quadrants and the moving vane.

These results show that the electrostatic device used in this investigation fulfills the requirements of a satisfactory wattmeter for measurements of power in communication and other low-level circuits, because the deflection is proportional to the power taken by the load regardless of the magnitude or sign of the phase angle between the current and voltage; it is sufficiently sensitive to measure power of the order of a very few milliwatts; and it has no appreciable frequency error.

Recommendations

Sensitivity: The sensitivity of the hairspring electrometer could be

materially increased by decreasing the quadrant spacing from 3 millimeters to 1.5 or 2 millimeters, the exact distance depending upon the construction of the jewel bearings and balance-staff pivots, and upon the thickness of the vane. If a still more sensitive instrument were desired multiple quadrants and vanes could be used with a hairspring of suitable size and strength.

Scale division: If an evenly divided scale were desired, i.e., deflection directly proportional to power, the following specifications would have to be carefully met:

(a). The quadrant surfaces should be absolutely flat, co-axial and uniformly conducting.

(b). The vane should be flat and accurate in outline, and should move in a plane parallel to the quadrants.

(c). The axis of rotation of the vane should pass through the center points of the quadrant surfaces.

(d). The plane of the vane should be midway between the quadrant surfaces.

The importance of these points increases rapidly as the vertical distance between quadrants is reduced in the endeavor to obtain the highest possible sensitivity.

Amplifier: If the amplifier were constructed using one of the new multi-electrode vacuum tubes with a high amplification factor (such as the type 57 with a theoretical maximum amplification of 1500) in place of a three stage amplifier as was used for the tests described in this paper (maximum amplification 200), the finished instrument with all auxillary equipment would fit into a case but little larger than that

housing a conventional power wattmeter. If it were necessary to amplify the line voltage also, an additional single tube voltage amplifier could readily be included.

Shielding: For accurate results the entire inside of the case except a small strip for the scale should be lined with metal and provision made for grounding if necessary. Where batteries are used for supplying the amplifier potentials they should be carefully shielded, as should also any of the wiring that might otherwise cause trouble.

CONCLUSIONS

The electrostatic wattmeter can be satisfactorily used to measure power in communication and other circuits in which the power level is usually quite low, because

1. It is accurate.

   (a). The deflections are proportional to the power and are independent of the proportionality of load impedance to load current. In other words, the deflection is dependent upon the total electrostatic field regardless of distribution of potential between the vane and the quadrants.

   (b). The deflection depends only on the true power taken by the load irrespective of the magnitude and sign of the phase angle between the current and voltage. In this case also the deflection is produced by the existing resultant field whether inductive or capacitive reactance predominates.

   (c). The instrument has no appreciable frequency error. Over the audio range investigated the deflection was practically independent of the frequency of the applied potentials.

2. It is versatile in application and direct and simple in operation.

   (a). The versatility of the wattmeter is demonstrated by the fact that it can be used on circuits of any audio com-

munication frequency (including direct current, zero frequency) and any condition of load unbalance. The sensitivity of the electrometer unit itself, depends upon the construction; an instrument more sensitive than the one described in this paper can be built by an experienced instrument maker.

(b). The fact that it gives a continuous reading of power in milliwatts illustrates the directness of its operation.

(c). The simplicity of operation of the wattmeter is shown by the fact that the finished instrument would have but two voltage terminals and two current terminals, and would have a flexibility and ease of operation approaching that of the commercial wattmeter now used for measurements in power circuits.

3. The power taken by the instrument is negligible compared to the power level in the circuit. In this investigation the maximum power loss due to the wattmeter was less than one-half of one per cent of the power taken by the load.

4. It can easily be built into a portable, self-contained unit. The rugged construction of the cone pivot, cone jewel type of instrument has long been a standard for portable electrical instruments. With such a simplified amplifier as has already been mentioned the electrostatic wattmeter can be housed in a small portable case, either with self contained portable batteries or a compact a-c power supply for the amplifier.

BIBLIOGRAPHY

1. Addenbrooke, G. L. Alternating-Current Measurements by Electrometers. Sci. Abstracts, vol. 4, no. 1124, 1901.

2. Albert, A. L. Electrical Communication, p. 96. John Wiley and Sons, Inc., New York, 1934.

3. Barnes, G. W. A Vacuum-Tube Wattmeter. Unpublished paper presented May 24, 1930 for A.I.E.E. mtg., O.S.C.

4. Burke, C.T. Letter to A. L. Albert, Feb. 21, 1933. General Radio Co., 30 State St., Cambridge, Mass.

5. Chauveau, A. B. Limiting Deflection of a Quadrant Electrometer. Sci. Abstr., vol. 4, no. 133, 1901.

6. Compton, K.G. and Haring, H. E. Compensated Thermionic Electrometer. Electrochem. Soc. Reprint no. 62-17, 1932, pp. 345-357.

7. Daniell, Alfred A Text Book of the Principles of Physics, p. 606. MacMillan and Co., Third Ed. 1895.

8. Dolezalek, F. Sensitive Quadrant Electrometers. Phy. Soc. Abstr., vol. 3, no. 315, 1897.

9. Dolezalek, F. A Simple and very Sensitive Quadrant Electrometer. Sci. Abstracts, vol. 4, no. 1330, 1901.

10. Dolezalek, F. and Nernst, W. New Form of Quadrant Electrometer. Phy. Soc. Abstracts, vol. 2, no. 666, 1896.

11. Eldredge, K. R. A Wattmeter for Communication Circuits. Electrical Engineering, vol. 54, no. 3, March 1935, p. 279.

12. Elster, J. and Geitel, E. Quadrant Electrometer. Sci. Abstracts, vol. 1, no. 802, 1898.

13. Encyclopedia Brittannica. Electrostatic Instruments, vol. 12, page 448. Encyclopedia Brittannica, Ltd. London, Ed. 14, 1929. vol. 2, pp. 9-15.

14. Glazebrook, Sir Richard A Dictionary of Applied Physics, vol. 2, pp. 9-15. MacMillan and Co., Ltd., London, 1922.

15. Kouwenhoven, W. B. The Quadrant Electrometer. A.I.E.E. Journal, vol. 44, pp. 973-981, Sept. 1925.

16. Lardner, D. Handbooks of Natural Philosophy and Astronomy, Second Course, p. 250, sec. 1757, Blanchard and Lea, Philadelphia, 1855.

17. Mason, Hobart A Text-book on Static Electricity, pp. 97-100, McGraw-Hill Book Co., New York, 1904.

18. Maxwell, J. C. Electricity and Magnetism, vol. 1, p. 336. Clarendon Press, London, 1904.

19. Moles, F. J. Supersensitive Amplifier for Measuring Small Currents. Gen. Elec. Rev., vol. 36, no. 3, pp. 156-158, March 1933.

20. Olmsted, Denison Olmsted's Philosophy or an Introduction to Natural Philosophy, p. 392, sec. 579. Robert B. Collins, New York, 1855.

21. Pender, Harold Handbook for Electrical Engineers, pp.512-514. John Wiley and Sons, Inc., 1922, Sec. Ed.

22. Rayner, E. H. High-Voltage Tests and Energy Losses in Insulating Materials. Jl. Inst. E. E., vol. 49, p. 3, 1912

23. Sugden, H. How Hairsprings are Made. Instruments, vol. 3, no. 8, pp. 482-484, Aug. 1930.

24. Sutton, J. F. The Quadrant Electrometer. Jl. Sci. Instru., vol. 4, no. 7, pp. 226-232, Apr. 1927.

25. Swinburne, J. The Electrometer as a Wattmeter. Philosophical Magazine, vol. 7, p. 7, 1885.

26. Turner, H. M. and McNamara, T. F. An Electron-Tube Wattmeter and Voltmeter and a Phase Shifting Bridge. Inst. R. E. Proc., vol. 18, no. 10, pp. 1743-1747, October 1930.

27. Wagner, T. B. A Thermionic-Tube Measuring Instrument. Elec. Engr., vol. 53, no. 12, p. 1621, Dec. 1934

28. Wilson, E. Kelvin Electrometer as Wattmeter and Voltmeter. Sci. Abstr., vol. 1, no. 520, 1898.

APPENDIX

TABLE VI

Frequency response data of wattmeter with load of series resistance, R_2 = 10,406 ohms, and capacitance, C = 3.28 mfd. Circuit of Figure 4. E_2 = 0.07 volts; I = 3.5 ma.

Frequency in cycles per second	E_1 in volts	E_3 in volts	Deflection in cm.
200	37.0	14.8	6.40
300	37.0	14.8	6.45
400	37.5	15.0	6.50
500	37.5	15.0	6.50
700	37.5	15.0	6.50
900	37.5	15.0	6.50
1000	37.5	15.0	6.50
1200	37.5	15.0	6.50
1500	37.5	15.0	6.50
2000	37.5	15.0	6.50
3000	37.5	15.0	6.50
4000	37.5	15.0	6.50
5000	37.5	15.0	6.50
6000	37.5	15.0	6.50
7000	37,3	14.8	6.40
8000	37.0	14.8	6.30
9000	37.0	14.7	6.30
10000	37.0	14.7	6.40

TABLE VII

Calibration data for wattmeter with resistance load, R_2 = 5000 ohms, at frequencies of 200, 1000 and 5000 cycles per second. Circuit of Figure 5. (D = deflection)

I in ma.	E_{200} in volts	E_{1000} in volts	E_{5000} in volts	P in milli-watts	D_{200} in cm.	D_{1000} in cm.	D_{5000} in cm.
1.00	5.1	5.2	4.6	5.0	1.6	1.7	1.8
1.40	7.0	7.0	6.3	9.8	2.3	2.6	2.6
2.00	10.0	10.0	9.0	20.0	3.5	3.9	3.9
2.47	12.3	12.5	11.5	30.5	5.0	5.5	5.5
3.00	15.0	15.0	14.0	45.0	6.8	7.4	7.3
3.50	17.9	18.0	16.8	61.5	8.2	8.7	8.7
4.00	20.2	20.3	19.3	80.0	10.1	10.3	10.3
4.50	22.5	22.7	21.0	101.0	11.8	12.1	12.0
5.00	25.0	25.1	23.3	125.0	13.4	13.5	13.6

TABLE VIII

Calibration data for wattmeter with load of series resistance, R_2 = 5000 ohms, and capacitance, C = 0.25 mfd., at frequencies of 200, 1000 and 5000 cycles per second. Circuit of Figure 5. Same column headings as Table VII above.

1.00	5.4	5.0	4.6	5.0	1.5	1.5	1.3
1.40	8.2	7.2	6.6	9.8	2.4	2.5	2.3
2.00	11.4	10.3	9.3	20.0	3.8	3.7	3.5
2.47	14.4	13.0	12.0	30.5	5.2	5.1	5.1
3.00	17.5	15.6	14.3	45.0	6.6	6.7	6.2
3.50	20.3	18.5	17.0	61.5	8.6	8.6	8.3
4.00	23.0	20.8	19.4	80.0	10.1	10.3	10.0
4.50	26.0	23.8	21.0	101.0	11.8	11.6	11.6
5.00	29.0	26.0	24.0	125.0	13.4	13.0	13.0

TABLE IX

Calibration data for wattmeter with load of series resistance, R_2 = 5000 ohms, and inductance, L = 147 millihenrys for frequencies of 200, 1000 and 5000 cycles per second. Circuit of Figure 5.

I in ma.	E_{200} in volts	E_{1000} in volts	E_{5000} in volts	P in milli-watts	D_{200} in cm.	D_{1000} in cm.	D_{5000} in cm.
1.00	5.2	5.4	6.5	5.0	1.2	1.2	1.6
1.40	7.1	7.3	9.3	9.8	2.0	2.2	2.4
2.00	10.0	10.3	13.0	20.0	3.0	3.0	3.5
2.47	12.6	12.8	16.6	30.5	4.5	4.6	5.0
3.00	15.0	15.5	19.6	45.0	6.0	6.1	6.3
3.50	17.9	18.2	22.8	61.5	7.7	7.9	8.0
4.00	20.1	21.0	26.4	80.0	9.5	9.6	9.5
4.50	22.6	23.2	29.9	101.0	11.4	11.5	11.3
5.00	25.2	25.6	33.8	125.0	12.5	12.5	12.4

TABLE X

Calibration data for wattmeter with resistance loads, R_2 = 5000, 7500 and 10,000 ohms at a frequency of 200 cycles. Circuit of Figure 5.

I in ma.	E_{5000} in volts	E_{7500} in volts	E_{10000} in volts	P_{5000} in mw.	P_{7500} in mw.	P_{10000} in mw.	D_{5000} in cm.	D_{7500} in cm.	D_{10000} in cm.
1.00	5.1	7.2	10.1	5.0	7.5	10.0	1.6	1.6	2.5
1.40	7.0	10.5	14.0	9.8	14.7	19.6	2.3	2.7	3.4
2.00	10.0	14.6	20.0	20.0	30.0	40.0	3.5	4.5	5.8
2.47	12.3	18.8	25.0	30.5	45.8	61.0	5.0	6.3	7.6
3.00	15.0	22.2	30.0	45.0	67.5	90.0	6.8	8.2	10.0
3.50	17.9	26.0		61.5	92.0		8.2	10.3	
4.00	20.2	30.0		80.0	120.0		10.1	12.6	
4.50	22.5			101.0			11.8		
5.00	25.0			125.0			13.4		

ACKNOWLEDGMENT

The author wishes to thank Mr. A. L. Albert, Associated Professor of Communication Engineering at Oregon State College, for suggesting the subject of direct power measurement in communication circuits ans also for helpful suggestions during its development.

The assistance of my father, Mr. H. A. Beckendorf, and of my brother, Mr. W. A. Beckendorf, in constructing the delicate parts of the electrometer unit has been invaluable.

I am also indebted to Miss Dorothy M. Atwood for valuable help in conducting laboratory tests and assistance in preparing the finished manuscript.