AN ABSTRACT OF THE THESIS OF

GLENN SCHROEDER for the MASTER OF SCIENCE
(Name) (Degree)

in FOREST PRODUCTS presented on March 6, 1974
(Major) (Date)

Title: END-FIXATION IN EXTERIOR STUD WALL SYSTEMS

Abstract approved: Signature redacted for privacy.
George H. Atherton

Present design procedures for exterior stud wall systems result in walls which are over-designed because composite action, load sharing, and partial end-fixation are not taken into consideration.

In this study partial end-fixation was evaluated for several methods of wall construction. A mathematical model was developed to determine the coefficient of end restraint. Tests of 45 wall sections were conducted to evaluate certain variables in the model. Construction types, exterior coverings and axial loads were varied during testing to evaluate the effect on end fixation.

Statistical analyses were performed to evaluate the effects of construction type, exterior covering, and axial load on end-fixity.

An example is presented to show the application of the coefficient of end restraint in calculating deflection of a beam-column with partial end-fixity.

End-Fixation in Exterior Stud Wall Systems

by

Glenn A. Schroeder

A THESIS

submitted to

Oregon State University

in partial fulfillment of
the requirements for the
degree of

Master of Science

June 1974

APPROVED:

Signature redacted for privacy.

Professor of Forest Products
in charge of major

Signature redacted for privacy.

Head of Department of Forest Products

Signature redacted for privacy.

Dean of Graduate School

Date thesis is presented March 6, 1974

Typed by Susie Kozlik for Glenn Schroeder

ACKNOWLEDGEMENT

The author wishes to express his appreciation to G. H. Atherton and Anton Polensek for their guidance and encouragement in this study.

I would also like to express my thanks to my wife Laurelee for her support during this study.

TABLE OF CONTENTS

LIST OF FIGURES

LIST OF TABLES

END-FIXATION IN EXTERIOR STUDY WALL SYSTEMS

INTRODUCTION

Exterior walls composed of two-by four wood studs and exterior and interior covering are the basic vertical structural elements in most dwellings. Figure 1 shows a typical wall frame structure. Generally the exterior covering is plywood sheathing which may vary in thickness depending upon the design requirements. A single thickness of plywood sometimes serves as a combination exterior siding and sheathing. The interior wall covering often is gypsum board with the long dimension applied horizontally. The joints of the gypsum board are then taped and filled with a joint compound. The related properties of the individual components and the construction methods determine how such a stud wall system will behave.

Stud wall panels have two major functions: To support vertical loads, and to resist lateral deformations from horizontal loading. The vertical loads result for example from the weight of supported roof and floor structures, snow and wind load, and weight of occupants. In addition wall panels must be able to withstand wind forces acting on the face of the wall. Each of these load factors must be taken into consideration when designing. Although the magnitude of these forces may vary from one geographical location to another, the same basic design procedures are used throughout the United States in design of wall systems.

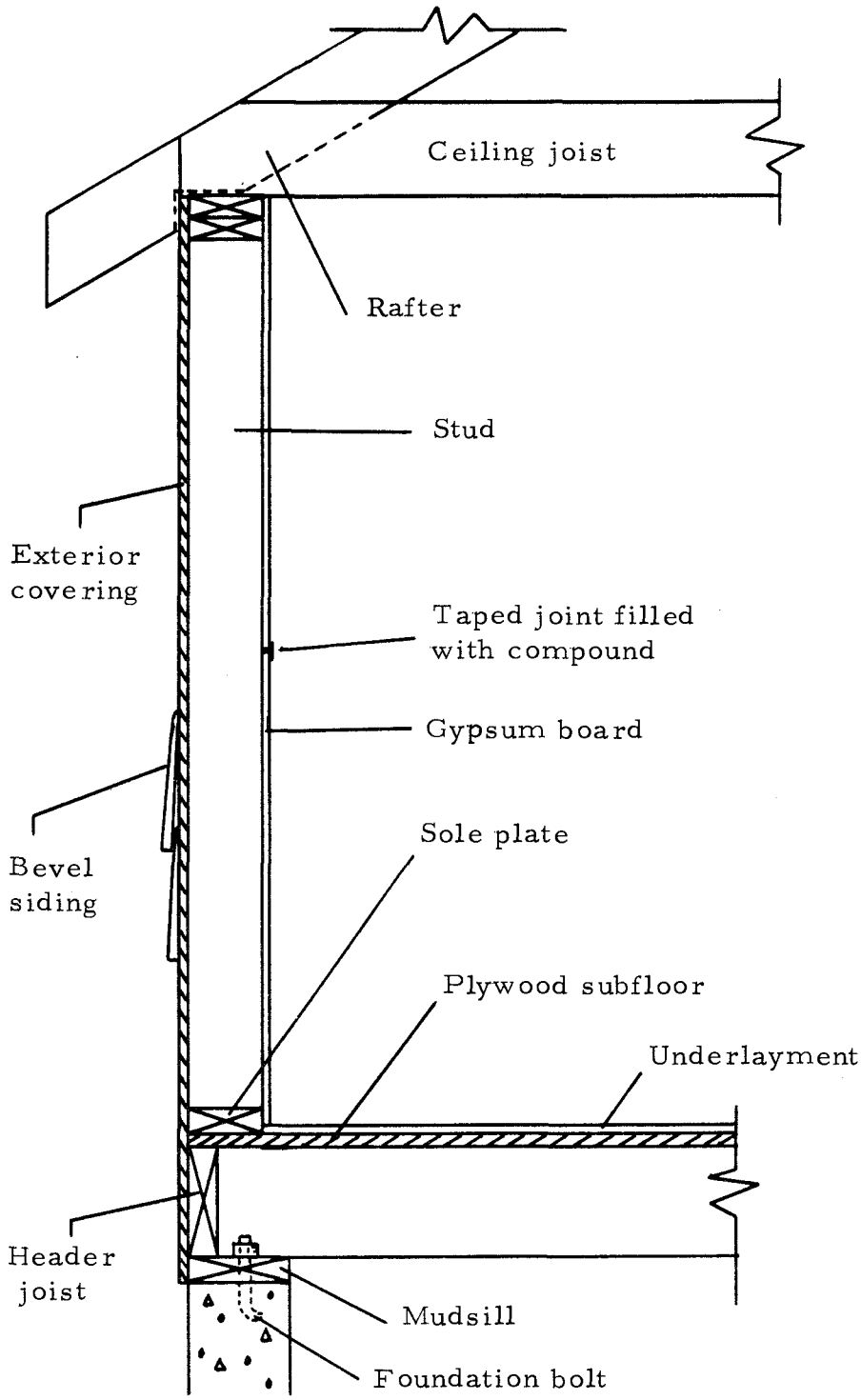

Figure 1. Typical platform framing construction.

Design procedures currently assume that stud wall systems behave as individual studs acting as simply supported beam-columns. A simply supported beam-column with free-ends is assumed to be the weakest possible case whereas completely fixed ends is the strongest case. Another assumption is that the stud is on a rigid non-elastic foundation where no horizontal displacement of the ends may occur. This is to say that a wind force will only produce end rotation without displacement horizontally.

Typical wall systems however behave somewhat differently than what is assumed in design. Therefore design procedures should be modified to predict the effect of composite action and load-sharing upon strength and stiffness of walls. However, before composite behavior can be predicted in design, slip (relative movement between the studs and the covering materials) must be known. It is also assumed that some degree of end-fixity may strengthen and stiffen stud walls. This partial fixity may be the result of exterior plywood or other covering extending beyond the ends of studs where it may be attached to the structural members of the floor. Each of these factors will subsequently be discussed in greater detail and it will be shown that other investigators are now studying or have studied composite action, load-sharing, and slip, but end-fixity has not been studied for wood systems.

A brief discussion of application of coefficients of end restraint to structural design is contained in Appendix A.

Once a good understanding of the mechanisms involved in analyzing stud wall systems is available, more practical and efficient design procedures may be implemented to more accurately predict wall behavior.

Objectives in this study are to:

1. Develop a mathematical model by which to predict the coefficient of end restraint for walls with partially fixed ends from rigidity values, midspan deflections and loading.
2. Determine a relative degree of end-fixation that may be present in 15 different types of wall construction.
3. Measure the elastic properties of the individual material which make up a wall.
4. Determine what effect if any that varying the column load and exterior covering upon the end-fixity and the respective elastic behavior of the walls.

BACKGROUND

Composite Action

Beams composed of more than one element are considered to be composite beams and are frequently used in structures. When the parts of a composite beam are not interconnected in some manner, each element may tend to act independently and therefore the load carrying capacity of the beam cannot be greater than that of the individual parts. The degree of interaction between the elements depends upon the amount of slip between the two interfaces allowed by shear connectors such as nails, staples, or adhesive. Newmark *et al.* (14, 19) conducted a rigorous study on slip in composite steel and concrete T-beams. They showed that the amount of slip depends directly on the stiffness of the total shear connection which, in turn, depends on the spacing and the stiffness of the individual shear connectors. Results from their tests indicated that the shear connections transmitted more load per unit length at locations further from the applied load than close to it. Variable spacing of the connectors provided stiffer action than a uniform spacing of connectors. Figure 2 shows load-slip curves for their tests. In this study, Newmark developed a relationship characterizing the behavior of composite T-beams with incomplete interaction. The deflections caused by a concentrated load developed from his theory are determined from the

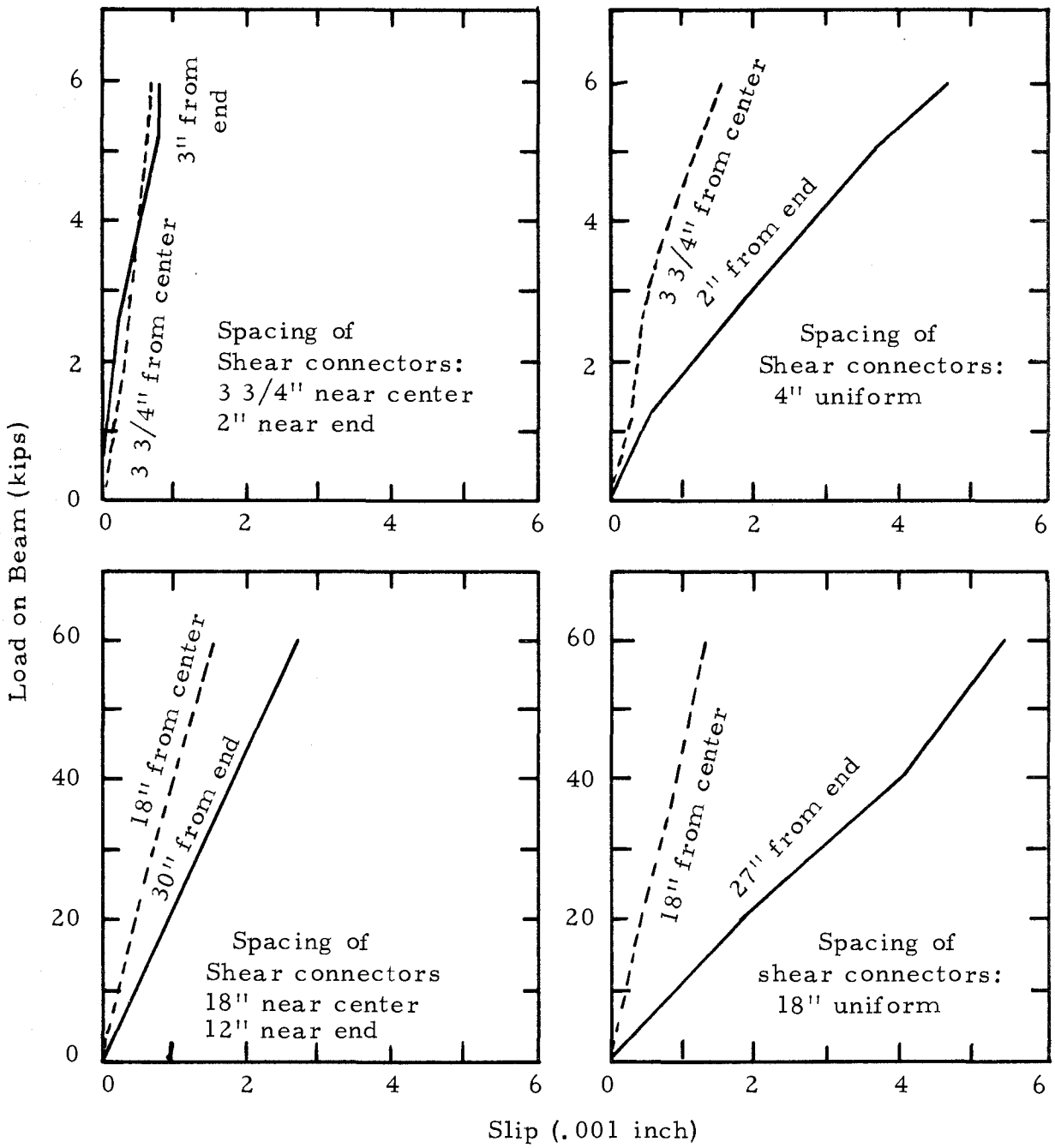

Figure 2. Load-slip curves for beams with concentrated center load. From Newmark (14).

relationship:

$$y = \frac{PL^3}{\overline{EI}} \left(1 - \frac{u}{L}\right) \frac{x}{L} \left(\frac{1}{6}\left[2\frac{u}{L} - \left(\frac{u}{L}\right)^2 - \left(\frac{x}{L}\right)^2\right] + \frac{\overline{EA}Z^2}{\Sigma EI}\frac{C}{\pi^2}\frac{F}{F'}\right)$$

where

y = deflection, in.

P = concentrated load, lb.

L = span of the beam, in.

E = modulus of elasticity, lb/sq in.

I = moment of inertia, in.^{4}

u = distance between load and the support, in.

x = distance of the cross-section from the support, in.

A = cross-section area, sq. in.

Z = distance between the centroidal axis of the beam and the plate, in.

ΣEI = EI of the flange plus the EI of the rib, lb-in.^{2}

$\overline{EI}$ = $\Sigma EI + \overline{EA}\ Z^2$, lb-in.^{2}

$\overline{EA}$ = EA of the flange plus EA of the rib

F = forces acting at the centroid of the plate and the beam, lb/in.

F' = value of the force F for a beam with complete interaction, lb/in.

$$C = \frac{S}{k}\ \frac{\pi^2 \overline{EA} \Sigma\ EI}{L^2 EI}$$

where C is the degree of interaction between the elements,

S is the spacing of the shear connectors in inches, and k is the modulus of the shear connectors, lb/in.

Slip, δ, then, which is the relative movement between the plate and the beam in inches, is defined as:

$$\delta = \frac{Q}{k} = \frac{qS}{k}$$

where Q is the load on the connector in lb, and q is the horizontal shear per unit length of the beam at the interface of the beam and plate, lb/in.

The theory agreed well with the test results of their study. With minor modifications the authors state that this theory can be used to predict any type of composite beam behavior.

Slip modulus was further elaborated on by Amana and Booth (2). They used the basic concept to test stressed-skin components and predict the effect of plate flexure and slip on the stiffness factor. Panels consisted of solid wood, ribs and plywood skins. Stiffening factor was defined as the ratio of the stiffness of the composite beam to that of the rib alone. They also investigated the effective breadth (be), or the width of a plate acting with the rib, which if uniformly stressed would contribute the same amount to the flexural resistance of the beam as the whole nonuniformly stressed plate. The stiffness factor and the breadth effect varied along the span with smallest values being at points of maximum moments. The effect of skin and

rib primary variables on effective breadth and stiffness factor from their study are presented in Figures 3 through 7. Symbols used by Amana and Booth were:

k = slip modulus, lb/in

s = fastener spacing, in

t = plate thickness (subscripts 1 and 2 for top and bottom plates, respectively), in

d = rib depth, in

i = stiffness factor, ratio of stiffness of composite beam to stiffness of rib alone

b = breadth, in

be = effective breadth, in

Δ = maximum deflection for incomplete interaction

Δ_{com} = maximum deflection for complete interaction

They (2) concluded that: (1) the presence of even a thin bottom plate would greatly increase the stiffness and reduce rib stress, (2) the presence of slip has a major effect upon the deflection of the composite, and (3) increasing the number of nails or staples would not result in complete composite action. In a second phase of their study, Amana and Booth (3) conducted tests on five types of nailed or glued stress-skin panels. Results indicated that deflections of glued beams varied linearly with load when forces were within the linear range of the beam. They noted that stiffness of the beams varied depending

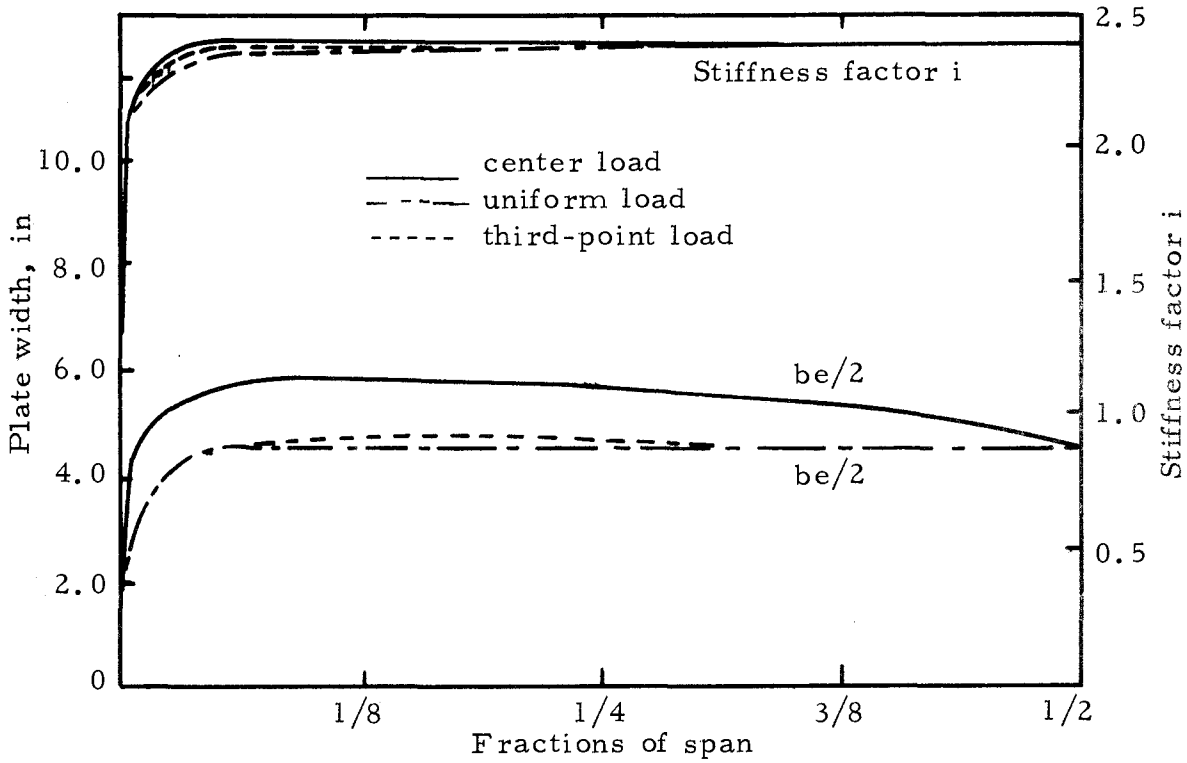

Figure 3. Variations of effective breadth and stiffness factor along the span. From (2).

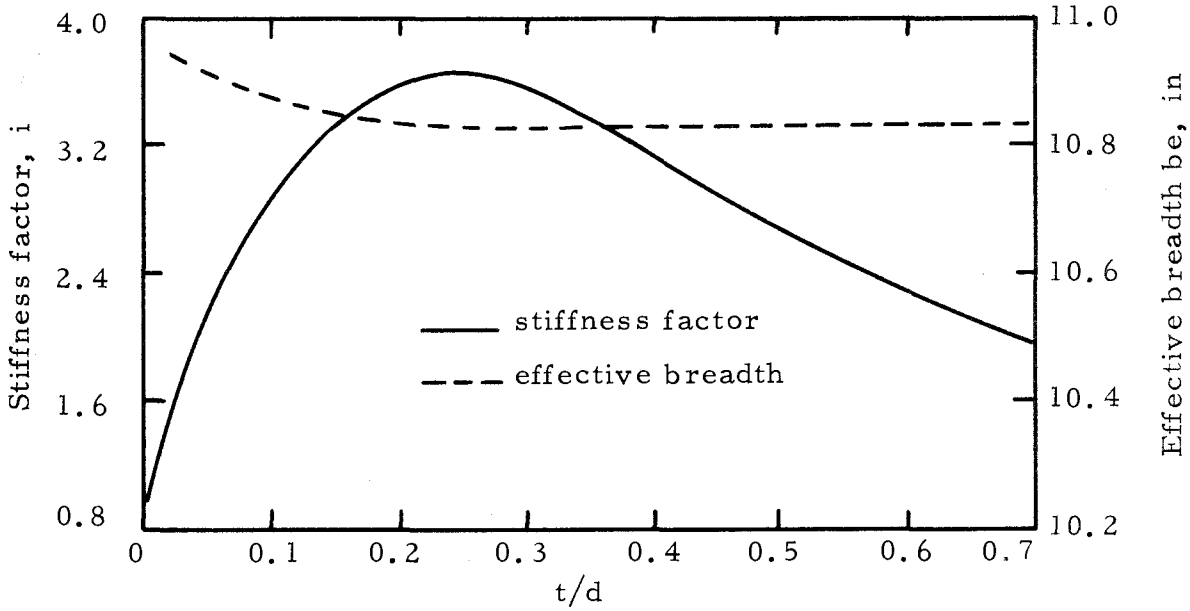

Figure 4. Variation of stiffness factor and effective breadth with t/d. From (2).

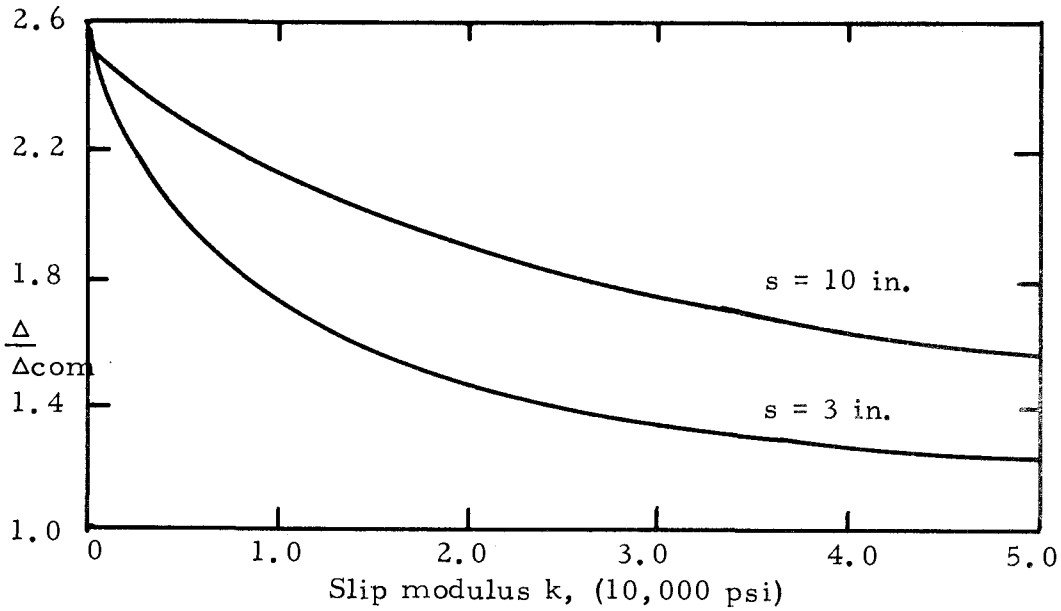

Figure 5. Beam deflections for different values of slip modulus k. From (2).

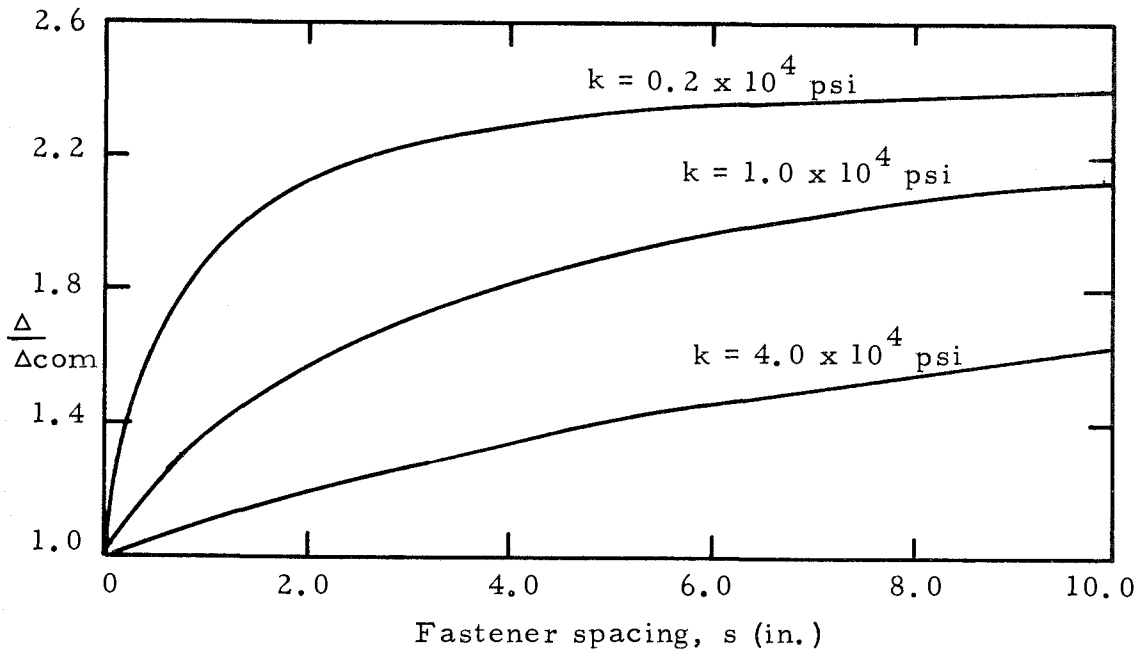

Figure 6. Beam deflections for different values of fastener spacing. From (2).

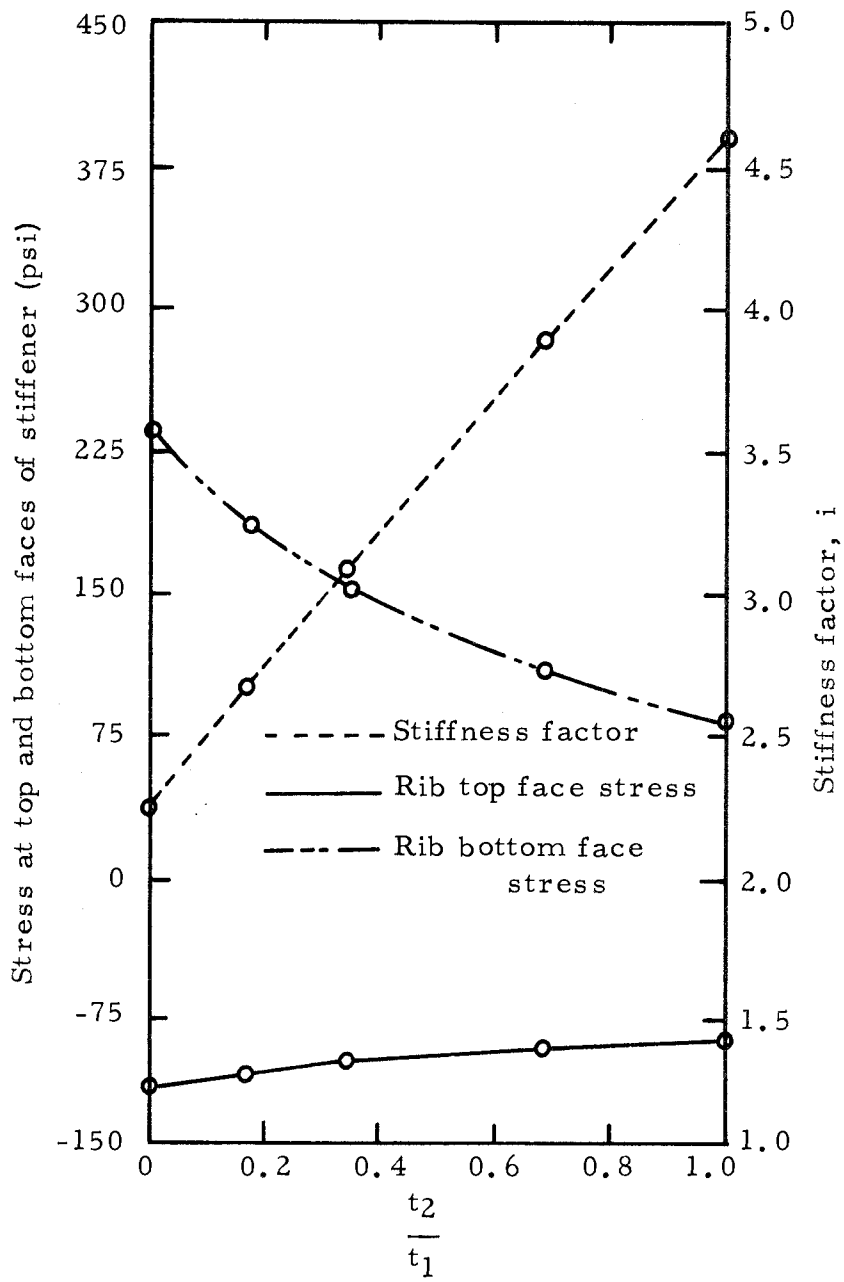

Figure 7. Stiffness factor and rib extreme fibre stresses for different values of $\frac{t_2}{t_1}$. From Amana and Booth (1967).

upon the elastic properties of the adhesive used. The load-deflection behavior of nailed panels however was non-linear because of the slip characteristics of the nailed joints.

It has been shown that deflection in a composite beam is directly related to the amount of slip between the elements (2, 3, 14, 18, 19, 20). Several investigators (2, 3, 6, 8, 14, 17, 18) have studied the behavior of nailed, stapled, and nail-glued joints of wood. Generally it has been shown that slip and the ultimate lateral load of a nailed or stapled joint are a function of depth of penetration, diameter and type of shank, and the wood density. A nail-glued joint also is dependent upon the strength properties of the adhesive used.

Load Sharing Effect for Repetitive Members

The effect of load-sharing in which stronger members of a repetitive member structure support weaker members has been studied by Polensek and Atherton (15) while testing stud wall systems. They obtained an average stiffness factor of 1.48 for a one-story vertical load and 1.82 for a two-story applied load when only bevel siding was applied to the studs.

Beam-Column Theory

A beam-column may be considered as a structural element which is subject to an axial load and a simultaneous lateral load.

Deflections and stresses in a simple beam in bending are assumed to be proportional to the applied loads below the proportional limit. This behavior is explained well by Hooke's law (12). Beam-column behavior however is different. Bending moments, shear forces, stresses, and deflections in the beam will not be proportional to the magnitude of the axial load. Bending moments and stresses will however be dependent upon the magnitude of the deflections induced by the lateral load, eccentricities, and the axial load itself. Therefore, direct application of Hooke's law cannot be made.

Timoshenko (20) explains the behavior of a beam-column on simple supports with the general elastic equation:

$$EI \frac{d^2y}{dx^2} = -M \qquad [1]$$

where EI is the flexural rigidity, y is deflection, x is distance along the beam, and M is the bending moment. For a beam-column with axial load P, and center load Q, the bending moment will be:

$$M = \frac{Q\ell}{4} + Py \qquad [2]$$

where l = beam span

combining [2] with [1]

$$EI \frac{d^2y}{dx^2} = -\frac{Q\ell}{4} - Py \qquad [3]$$

Solving [3] for deflection at midspan results in

$$y \Big|_{\frac{\ell}{2}} = \frac{Q}{2Pk} \left(\tan\frac{k\ell}{2} - \frac{k\ell}{2}\right) \qquad [4]$$

where $k = \sqrt{P/EI}$.

For the case of an eccentrically applied axial load P as shown in Figure 8a, the deflections produced will be the same as couples applied at both ends of the beam-column as shown in Figure 8b.

Therefore, it can be shown for deflection that $M_o = Pe$, and when substituted into the original deflection equation [1] and solved for midspan deflection, equation [5] results.

$$y = \frac{M_o \ell^2}{8\ EI} \cdot \frac{2(1-\cos\lambda)}{\lambda^2 \cos\lambda} \qquad [5]$$

where $\lambda = \frac{k\ell}{2}$.

Elastic End-Restraints

Timoshenko (20) defines the degree of fixity existing at the ends of the beam, or the coefficient of end restraint, as

$$\alpha = \frac{M_a}{\theta_a} \qquad \beta = -\frac{M_b}{\theta_b} \qquad [6]$$

where M_a and M_b are resisting moment couples induced from the fixity of the beam ends and θ_a and θ_b are angles of rotation at the ends of the beam. If the beam is symmetrical α and β will be equal. The value of the coefficient may vary from zero for a simply supported end to infinity for a built-in end.

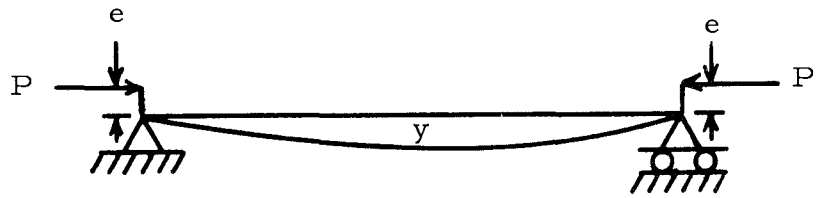

8a

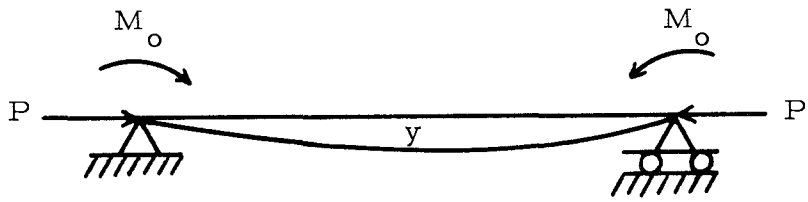

8b

Figure 8. Simply supported bars with eccentric load and moment couple, both producing the same deflections.

THEORETICAL DEVELOPMENTS

Coefficient of End Restraint

Timoshenko's (20) equation for the coefficient of end restraint "α" is:

$$\alpha = \frac{M_a}{\theta_a} \qquad [6]$$

where M_a is an end-fixity moment on a loaded beam (see Figure 9) and θ_a is the angle of rotation at the ends of the beam. By using the second order differential equation from Timoshenko:

$$EI \frac{d^2y}{dx^2} = -M_r \qquad [7]$$

which is assumed to describe the elastic behavior of a beam-column, a solution for the coefficient of end restraint can be obtained.

Where

EI = flexual rigidity

y = the deflection of the beam at some distance x along the beam

M_r = resisting moment within the beam

Referring to Figure 9 which is assumed to simulate beam-column loading, the resisting moment (M_r) of the system can be determined by a summation of moments about x.

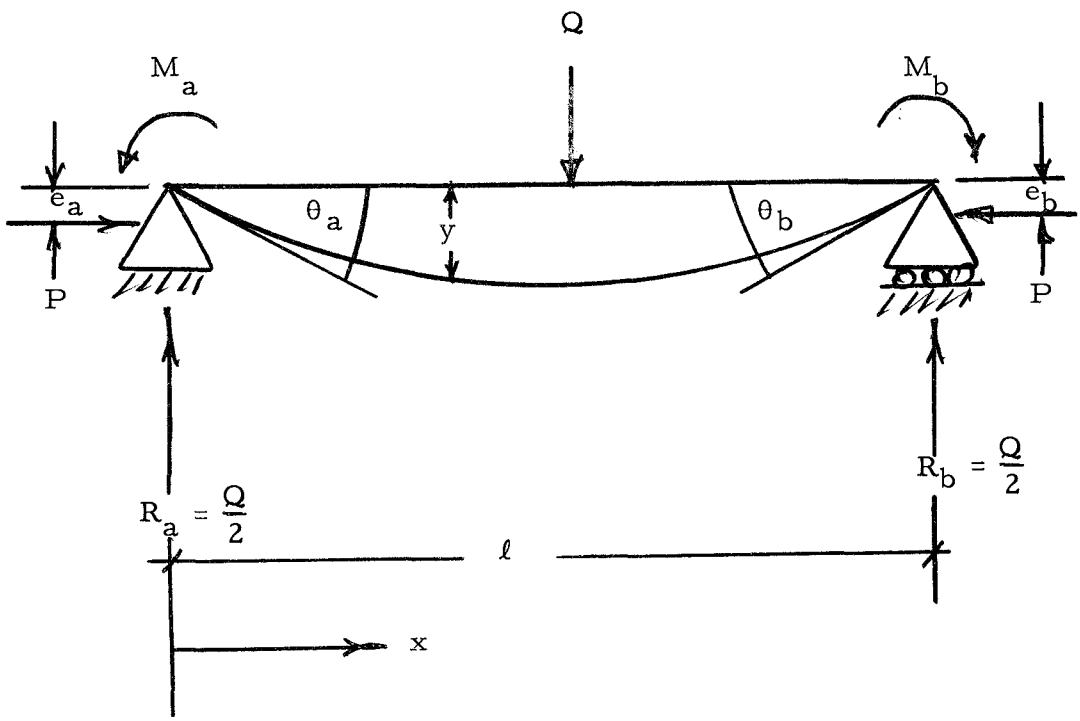

Figure 9. Assumed force diagram for a wall system.

If the loading is symmetrical then

$$M_a = M_b$$

$$e_a = e_b$$

$$R_a = R_b$$

Where:

M_a and M_b = Fixity moments at beam ends

e_a and e_b = eccentricity of load P at beam ends

R_a and R_b = beam reaction forces

Summing the moments about x, we obtain

$$\Sigma M_x = O = M_r + M_a + Pe_a - Py - \frac{Qx}{2} \qquad [8]$$

Therefore

$$M_r = Py + \frac{Qx}{2} - Pe_a - M_a \qquad [9]$$

where

M_r = resisting moment

P = axial load

Q = concentrated center load

y = deflection

and other terms have been defined.

Dropping the subscript (a) because of symmetry and combining equations [7] and [9], the desired elastic equation describing the behavior of the wall system can be obtained.

$$EI\frac{d^2y}{dx^2} = -Py - \frac{Qx}{2} + Pe + M \qquad [10]$$

Letting $k = \left[\frac{P}{EI}\right]^{\frac{1}{2}}$ equation [10] becomes:

$$\frac{d^2y}{dx^2} = -k^2y - \frac{k^2Qx}{2P} + k^2e + \frac{k^2M}{P} \qquad [11]$$

Arranging [11] differently to facilitate solution by means of the method of a complementary solution and a particular integral,

$$y'' + (0)y' + k^2y = -\frac{k^2Qx}{2P} + k^2e + \frac{k^2M}{P} \qquad [12]$$

The solution of differential equation [12], then can be expressed as the sum of the solution of the left and the right side of [12]

$$y = Y_c + Y \qquad [13]$$

where

y_c = complementary solution (left side of [12])

Y = particular solution (right side of [12])

The general solution for the left side of equation [12] is:

$$y_c = A\cos kx + B\sin kx \qquad [14]$$

The right side of equation [12] then takes the general form

$$Y = C_o x + C_1 \qquad [15]$$

which when differentiated twice gives

$$Y' = C_o \qquad [16]$$

and

$$Y'' = 0 \qquad [17]$$

Substituting [15], [16] and [17] into equation [12]

$$(0) + (0) + k^2(C_o x + C_1) = -\frac{k^2 Qx}{2P} + k^2 e + \frac{k^2 M}{P} \qquad [18]$$

then solving for C_o and C_1 by equating coefficients of x to the first power and x to the zero power we obtain coefficients of x:

$$C_o = -\frac{Q}{2P} \qquad [19]$$

Coefficients of x^o:

$$C_1 = \frac{M}{P} + e \qquad [20]$$

Substituting C_o and C_1 into [15] gives

$$Y = \frac{Qx}{2P} + \frac{M}{P} + e \qquad [21]$$

Substituting the results of equations [14] and [21] into [13] gives an expression for deflection in the wall system.

$$y = A \cos kx + B \sin kx - \frac{Qx}{2P} + \frac{M}{P} + e \qquad [22]$$

The coefficients A and B must be determined from two independent boundary conditions. When $x = 0$; $y = 0$, since the ends of the beam are supported and can not deflect. Application of this boundary condition to equation [22] gives

$$A = -\left(\frac{M}{P} + e\right) \qquad [23]$$

If equation [22] is differentiated with respect to x and evaluated at $x = \frac{\ell}{2}$, B can be evaluated.

$$\frac{dy}{dx} = -A k \sin kx + B k \cos kx - \frac{Q}{2P} \qquad [24]$$

and

$$\left.\frac{dy}{dx}\right|_{x=\frac{\ell}{2}} = 0 = A\,k\,\sin\lambda + B\,k\cos\lambda + \frac{Q}{2P} \qquad [25]$$

where

$$\lambda = \frac{k\ell}{2}$$

Therefore

$$B = \frac{-(\frac{M}{P} + e)\,k\,\sin\lambda + \frac{Q}{2P}}{k\cos\lambda} \qquad [26]$$

Substitution of equations [23] and [26] into [22] gives an expression for the deflection of the beam-column shown in Figure 9 in terms of the distance x, and the moment M.

$$y = -(\frac{M}{P} + e)\cos kx - \left[\frac{(\frac{M}{P} + e)k\,\sin\lambda - \frac{Q}{2P}}{k\cos\lambda}\right]\sin kx - \frac{Qx}{2P} + \frac{M}{P} + e \qquad [27]$$

Evaluating equation [27] at $x = \frac{\ell}{2}$ and then simplifying gives

$$y = (\frac{M}{P} + e)(-\cos\lambda - \tan\lambda\,\sin\lambda + 1) + \frac{Q}{2Pk}(\tan\lambda - \lambda) \qquad [28]$$

Solving equation [28] for the moment M

$$M = P\left[\frac{y\Big|_{\frac{\ell}{2}} - \frac{Q}{2Pk}(\tan\lambda - \lambda)}{(-\cos\lambda - \tan\lambda\,\sin\lambda + 1)} - e\right] \qquad [29]$$

results in an expression for the numerator in equation [6] .

The first derivative of the deflection equation [27] gives an expression for the slope of the deflection curve or the angle of rotation (θy).

$$\theta y = \frac{dy}{dx} = k(\frac{M}{P} + e) \sin kx - \left[\frac{(\frac{M}{P} + e)\, k \sin \lambda - \frac{Q}{2P}}{k \cos \lambda} \right] (k \cos kx) - \frac{Q}{2P} \quad [30]$$

By evaluating equation [30] at $x = 0$, the angle of rotation "θ" at the left or right end of the beam can be determined. The following expression results:

$$\theta = - \left[\frac{(\frac{M}{P} + e)\, k \sin \lambda - \frac{Q}{2P}}{\cos \lambda} \right] - \frac{Q}{2P} \quad [31]$$

Substituting [29] into [31]

$$\theta = \frac{\left[y\Big|_{\frac{\ell}{2}} - \frac{Q\ell}{4P\lambda} (\tan \lambda - \lambda) \right] \frac{2 \lambda \tan \lambda}{1}}{1 - \cos \lambda - \tan \lambda \sin \lambda} + \frac{Q}{2P} (\frac{1}{\cos\lambda} - 1) \quad [32]$$

Now substituting equations [29] and [32] into equation [6] gives an expression for the coefficient of end restraint, α ;

$$a = \frac{P \left[\frac{y\Big|_{\frac{\ell}{2}} - \frac{Q\ell}{4P\lambda} (\tan \lambda - \lambda)}{1 - \cos \lambda - \tan \lambda \sin \lambda} - e \right]}{\frac{\left[y\Big|_{\frac{\ell}{2}} - \frac{Q\ell}{4P\lambda} (\tan \lambda - \lambda) \right] \frac{2\lambda \tan \lambda}{\ell}}{1 - \cos \lambda - \tan \lambda \sin \lambda} + \frac{Q}{2P} (\frac{1}{\cos \lambda} - 1)} \quad [33]$$

Letting

$$r = 1 - \cos \lambda - \tan \lambda \sin \lambda$$

and

$$\Delta = \tan\lambda - \lambda$$

results in

$$\alpha = \frac{P\left(y\Big|_{\frac{\ell}{2}} - \frac{Q\ell}{4P\lambda}\Delta - er\right)}{\left(y\Big|_{\frac{\ell}{2}} - \frac{Q\ell}{4P\lambda}\Delta\right)\left(\frac{2\lambda\tan\lambda}{\ell}\right) + \frac{Q}{2P}\left(\frac{1}{\cos\lambda} - 1\right) r} \qquad [34]$$

If positive end-fixation exists, α will vary between zero and plus infinity (20).

Determination of λ

A solution of the coefficient of end restraint cannot be directly determined from equation [34] because lambda (λ) is unknown

$$\lambda = \frac{k\ell}{2} = \left[\sqrt{\frac{P}{EI}} \cdot \frac{\ell}{2}\right] \qquad [35]$$

The value of EI for the wall cannot be calculated directly. Difficulty arises from not having a homogeneous beam-column but a composite beam structure in which interlayer slip is unknown.

To determine EI for each wall construction type, each wall type was tested as in Figure 9 with $M_a = M_b = 0$. Using the mid-span deflection and substituting them into the elastic equation for the free-end deflection gives a solvable expression with only λ unknown. Solution of the real root λ, can be obtained using Newton's method of tangents(16) to improve a first estimate of the root λ. Here the

intersection λ_{n+1} with the λ-axis ($y = 0$) of the tangent to a curve $y = f(\lambda)$ at $\lambda = \lambda_n$ is given by

$$\lambda_{n+1} = \lambda_n - \frac{f(\lambda_n)}{f'(\lambda_n)} \qquad [36]$$

where

λ_n = the value of the first estimate of λ or $\frac{k\ell}{2}$

$f(\lambda_n)$ = value obtained when λ_n is inserted into the deflection equation

$f'(\lambda_n)$ = value obtained when λ_n is inserted into the first derivative of the deflection equation.

Free-end elastic behavior can be described by equation [10] :

$$EI\frac{d^2y}{dx^2} = -Py - \frac{Qx}{2} + Pe + M$$

Since there is assumed to be no end restraint in the free-end condition, $M = 0$ and equation [37] results.

$$EI\frac{d^2y}{dx^2} = -Py - \frac{Qx}{2} + Pe \qquad [37]$$

Following the same method of solution used to solve equation [28] for the derivation of the end restraint coefficient, the equation for free-end deflection is given by

$$y\Big|_{\frac{\ell}{2}} = e(-\cos\lambda - \tan\lambda\,\sin\lambda + 1) + \frac{Q}{2Pk}(\tan\lambda - \lambda) \qquad [38]$$

Treating λ now as a variable in equation [38]

$$f(\lambda) = e(-\cos\lambda - \tan\lambda \sin\lambda + 1)\frac{Q\ell}{4P}\left(\frac{\tan\lambda}{x} - 1\right) - y\Big|_{\frac{\ell}{2}} \qquad [39]$$

and taking the first derivative gives

$$f'(\lambda) = e\left(-\frac{\tan\lambda}{\cos\lambda} + \frac{Q}{4P}\left(\frac{\sec^2\lambda}{\lambda^2}\right)(-\sin\lambda \cos\lambda)\right) \qquad [40]$$

Initialization of equation [36] requires that a first approximation of λ_n be estimated. Once an approximation has been determined values of λ_n and individual solutions from equations [39] and [40] may be used to solve equation [36] for the best approximation of λ. Iteration procedure was stopped when λ_n converged to within plus or minus 0.0001 of the true value of λ.

Initial estimates of $\lambda_{(442)}$ and $\lambda_{(1002)}$ were

$$\lambda_{(442)} = 0.25035$$

$$\lambda_{(1002)} = 0.37693$$

The initial estimates of $\lambda_{(442)}$ and $\lambda_{(1002)}$ were obtained by assuming an E for the wall panel of 3.0×10^6 psi and using the moment of inertia (I) of the stud only. The product of EI was then used with other known conditions in equation [35] for an initial estimate of λ. The subscripts 442 and 1002 occur because two levels of end-load (subsequently discussed in more detail) were applied to wall panels.

METHODS AND MATERIALS

Experimental Design

The design of this study was set up to determine the coefficient of end restraint and to determine what factors had effect upon end-fixations in residential type wall systems. It was assumed in this study that only the floor-wall connection adds significant end-fixation to typical stud wall constructions. Consequently, any ceiling-wall interaction was assumed to be negligible.

A general design for this study is represented by Table 1. A total of 45 walls were constructed for testing in which there were 15 wall types and 3 replications of each type.

Table 1. Design of Experiment.

Construction type	Covering Thickness and Type					
	3/8" Plywood		5/8" Plywood		1/2" Particleboard	
	Rep*	Type no.	Rep	Type no.	Rep	Type no.
I	3	1	3	2	3	3
II	3	4	3	5	3	6
III	3	7	3	8	3	9
IV	3	10	3	11	3	12
V	3	13	3	14	3	15

*number of replications of each wall type

Construction and testing of each wall panel was conducted in two phases. First the walls without floors attached were built and tested with free-ends. That is, the wall panels were tested so as to allow free rotation of the ends during flexural tests. Secondly, 16" x 16" square floors were attached with five different methods of end-fixation and tested.

Wall Type Descriptions

Short floor sections which were attached to both ends of each wall panel were identically constructed for all 45 panels tested. Figure 10 shows the method and materials used in the construction of the joist floor sections. The construction specifications for the floor sections were as recommended by the Federal Housing Administration (21).

The wall construction types shown in Figures 11 through 15 differed by the manner in which the wall panel was fastened to the floor sections. A description of each wall construction type is given below.

Construction Type I

Construction Type I is sketched in Figure 11. The exterior sheathing overlapped the header joists and mudsill. The sheathing was fastened to the stud and plates with box nails. To fasten the

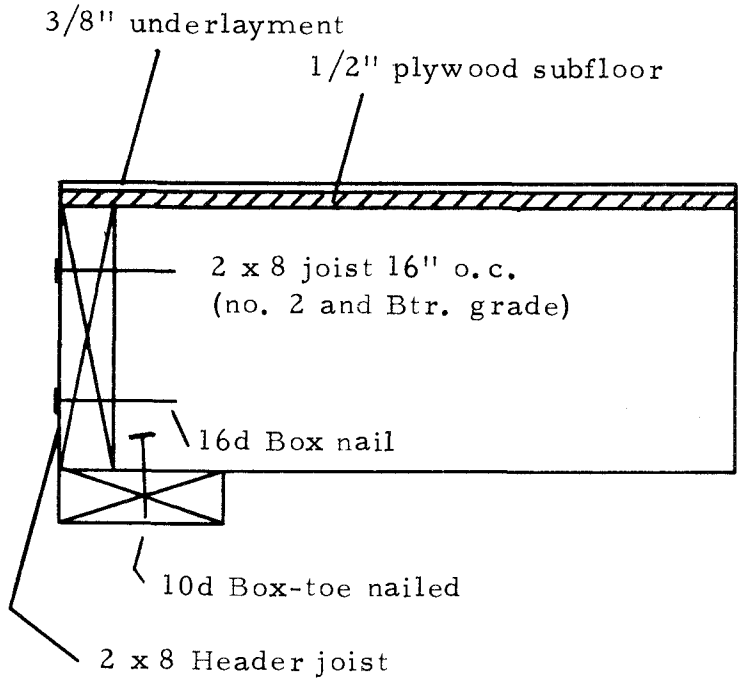

Figure 10. Typical joist floor construction used in end-fixity tests.

CONSTRUCTION TYPE I

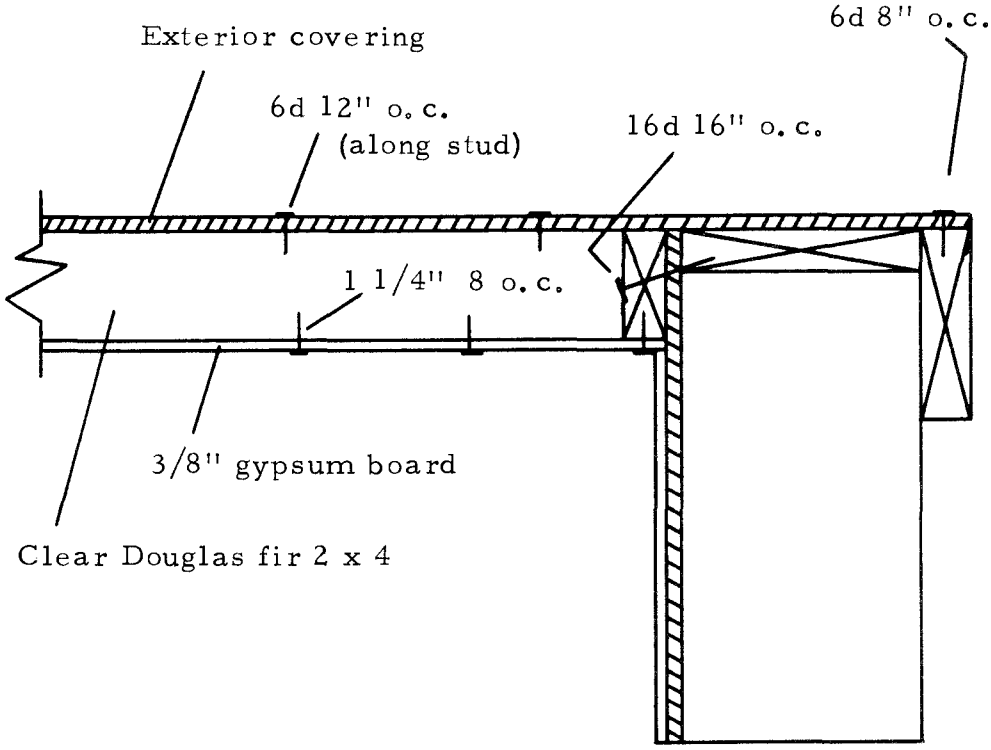

Figure 11. Wall construction type I with exterior covering overlapping floor header and conventional nailing.

sheathing to the plates, 8d box nails were used while 6d box nails were used along the length of the stud. The sole plate and the subfloor were fastened with 16d box nails spaced 16 inches on center.

Construction Type II

Construction Type II shown in Figure 12 is the second method approved by the Federal Housing Administration (21). Here the sheathing is not overlapped but nailed as in Type I. The sole plate however is fastened to the subfloor with three 16d box nails spaced eight inches on center.

Construction Type III

The third type of construction approved by the Federal Housing Administration (21) is recommended where the walls are subject to more intense wind loads. The wall sheathing does not overlap the header joist and mudsill. Instead a one-inch strap of 18-gage steel is wrapped around the mudsill and nailed with 6d box nails to both edges of the sill. The other end of the steel strap is fastened to the stud with three 6d box nails. The purpose of the strap is to tie the subfloor to the framing above. Sole plate to subfloor connections are the same as Type I construction.

CONSTRUCTION TYPE II

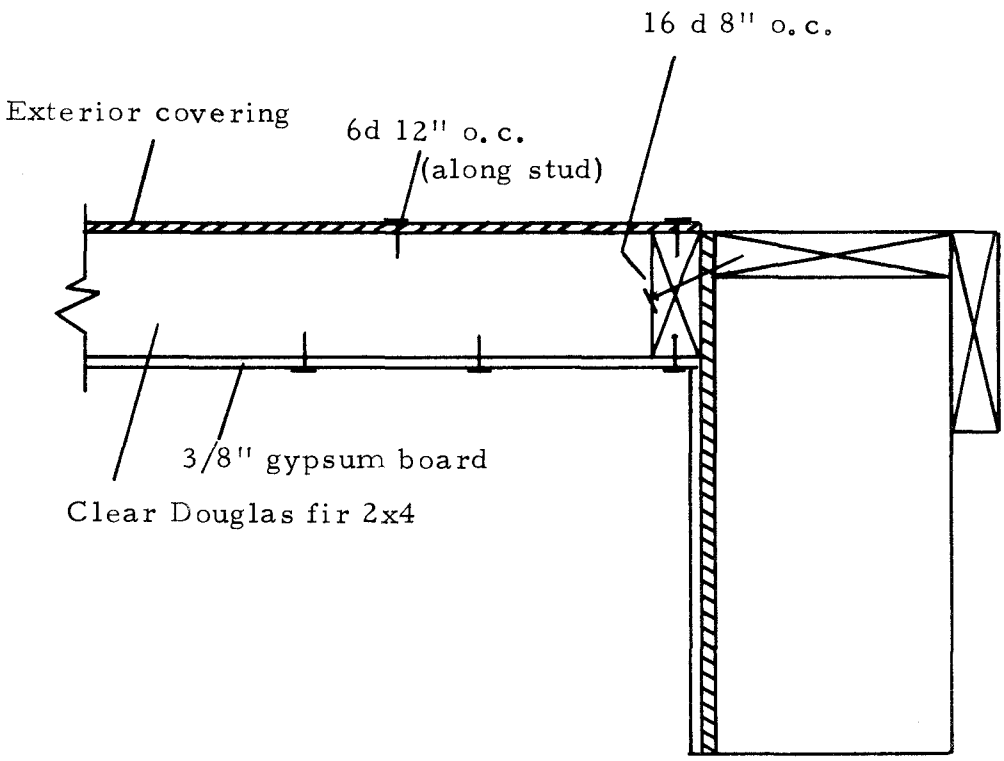

Figure 12. Wall construction type II where exterior covering does not overlap joist header and one additional 16d nail holds soleplate to floor.

CONSTRUCTION TYPE III

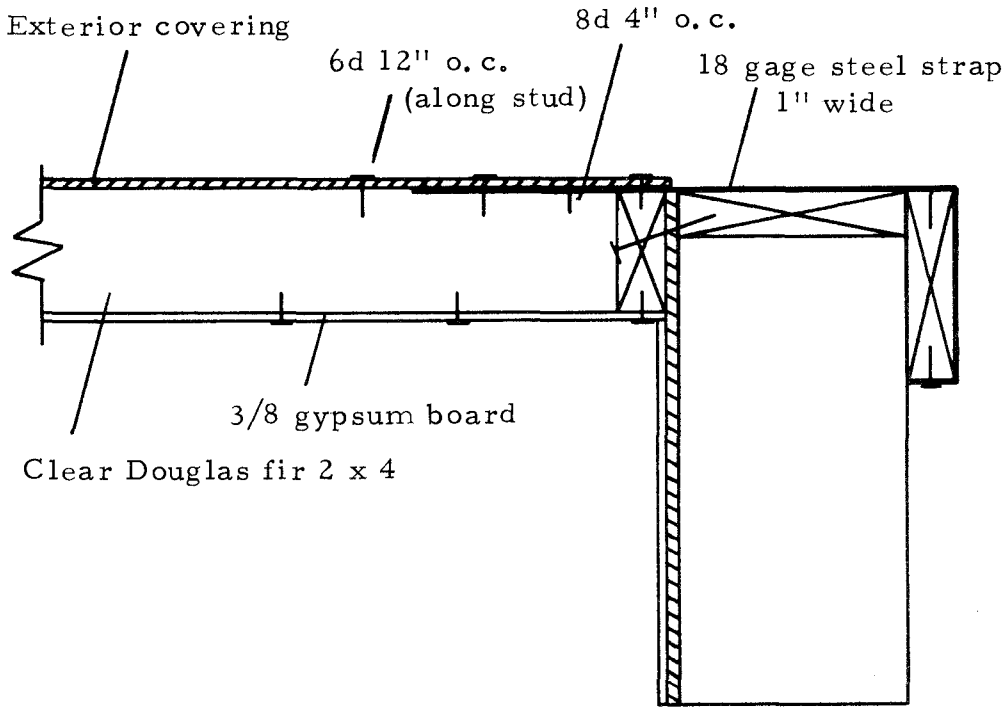

Figure 13. Wall construction type III where exterior covering does not overlap joist header and wall is tied to floor with a steel strap.

Construction Type IV

Staples instead of nails were used in Type IV to fasten the sheathing to the studs. Exterior coverings overlapped the header joist and the mudsill as in the first construction type. Staple spacings also were identical to nail spacing of Type I.

Construction Type V

The final construction type shown in Figure 15 is identical to Type I construction except an elastomeric adhesive was applied along the stud, the header, and the mudsill. Figure 16 shows how the adhesive was applied. The adhesive was allowed to cure for 28 days before testing the panels, but because panels were tested first with free-ends and subsequently with fixed-ends, the adhesive on the plywood overlapping the header and the mudsill cured 28 additional days. Test procedures will be described in greater detail in a subsequent section of the paper.

Test Material

Material Selection

Wood is a variable building material, therefore the studs were selected to limit the amount of variation in mechanical properties.

CONSTRUCTION TYPE IV

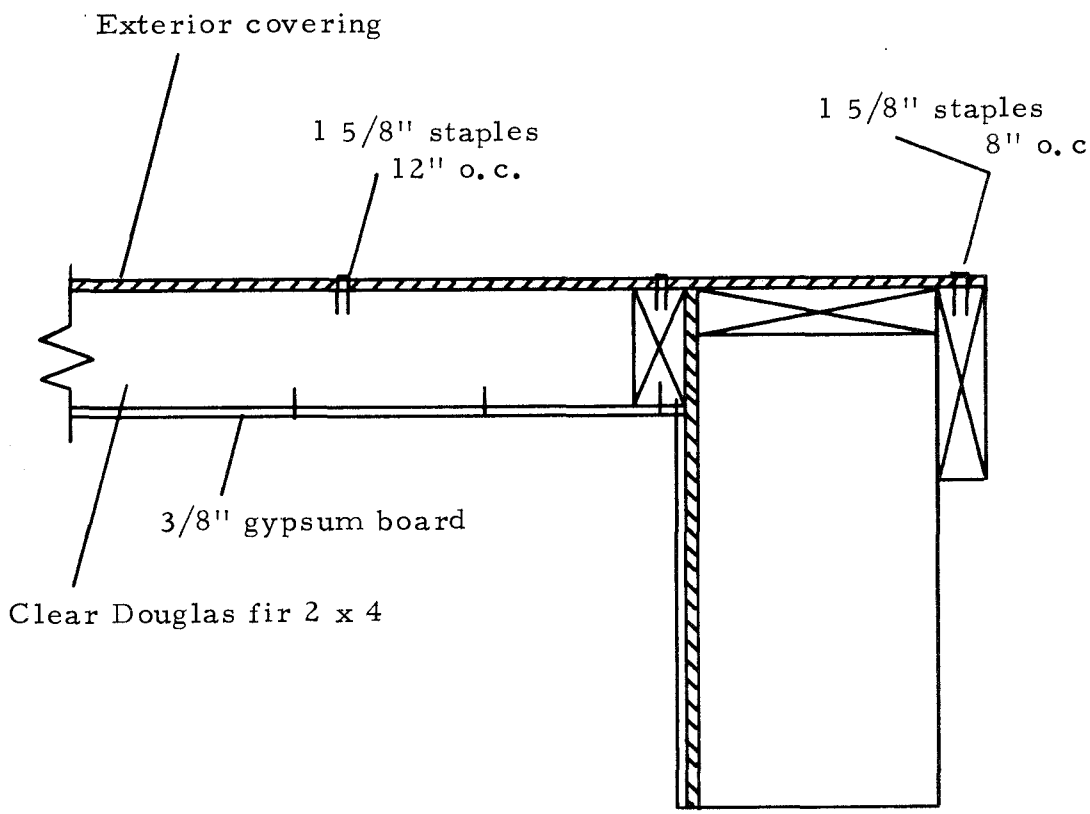

Figure 14. Wall construction type IV which has exterior covering attached with staples.

CONSTRUCTION TYPE V

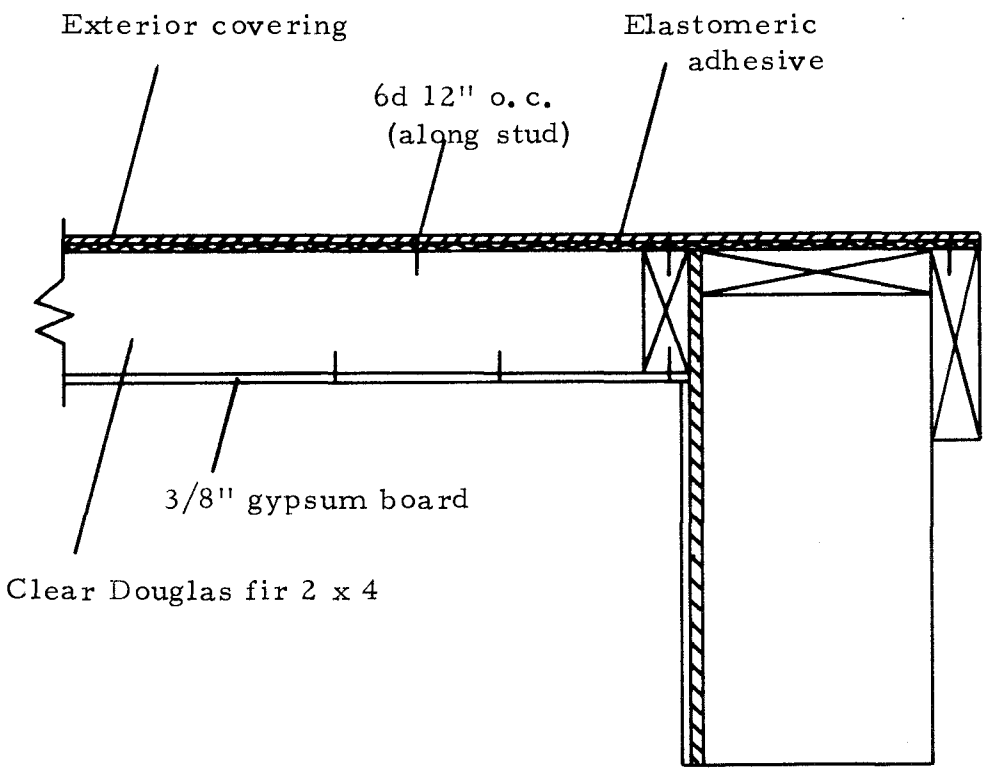

Figure 15. Wall construction type V where exterior covering overlaps and is nailed-glued.

Figure 16. Application of the adhesive to the plates and the studs.

Selection was from clear Douglas fir 2 x 4 studs from a single mill in Southern Oregon.

The criteria for selection was the modulus of elasticity (MOE). Several investigators (7, 9, 13) have shown some dependency of mechanical properties on MOE. To insure a small variation, only those studs having an MOE within a plus or minus 1.00×10^5 of the mean were initially selected for this study. The MOE was determined for each stud with a dead load apparatus. Each stud was placed on edge on simple supports spanned 92 1/2 inches. A 25-pound weight was then placed at midspan and the midspan deflection noted. Studs with deflections indicating MOE's within the desired limits were retained. This procedure was followed until 100 studs were retained.

Interior (gypsum) and exterior (plywood, particleboard) wall coverings were thought to be less variable in properties than the studs. These materials were therefore selected from mill stocks.

Three exterior coverings were selected for sheathing: 1) 3/8-inch CD exterior plywood sheathing, 2) 5/8-inch CD exterior plywood sheathing, and 3) 1/2-inch structural particleboard. Interior coverings for all walls were 3/8-inch gypsum wall board.

Stud Preparation

The studs were kiln dried to an average moisture content of 7 percent by weight and then equalized to an equilibrium moisture

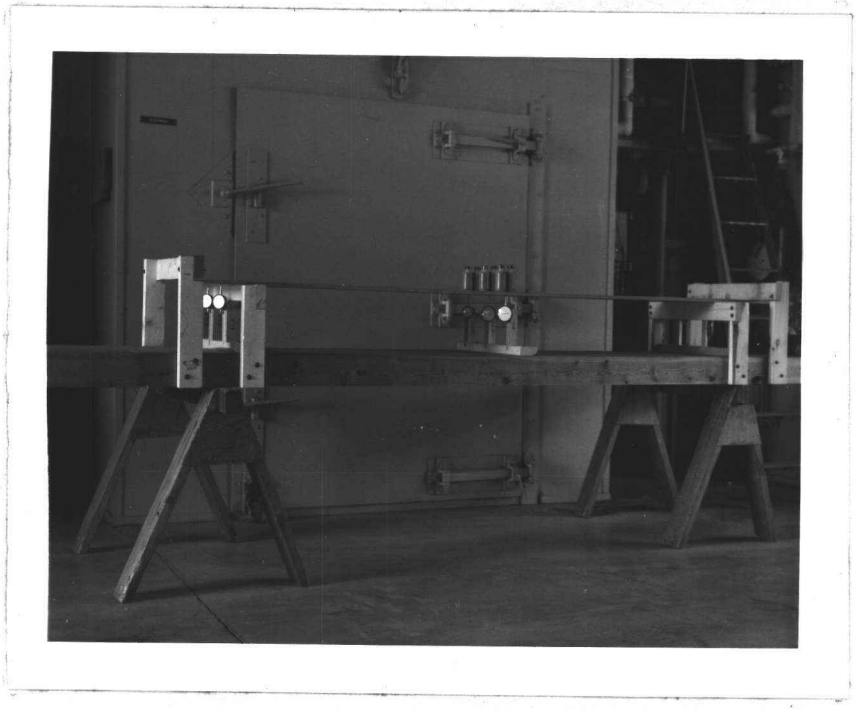

Figure 17. Apparatus used to test modulus of elasticities of the exterior coverings.

content. After several weeks of equalization all 100 studs were again dead-weighted on a 92 1/2 inch simple span and the MOE's recalculated. Forty-five studs from the center of this distribution were then selected for wall tests. Table 2 lists the MOE's of all the studs selected for wall tests.

Exterior Covering Preparation

Two separate methods of testing the exterior coverings were performed to simulate the actual way in which the coverings would be loaded during wall tests. Wall types I, IV and V which have overlapping coverings and were therefore tested so that any vertical movement of the ends was prevented. A sketch of this condition is shown in Figure 18. Wall types II and III however were not constructed with overlapping covering, therefore those samples were tested as simple beams. The load in each instance was applied as a strip load across the entire width of the plywood. Three deflection readings across the width of the sample were recorded and averaged.

(i) Indeterminant Plywood Loading

The three moment theorem (12) was used to determine the modulus of elasticity of coverings used on wall construction types I, IV and V. Referring to Figure 18 and applying the three moment

theorem, solutions for M_b and M_c can be derived. Because of beam symmetry

$$M_b = M_c$$

and

$$\ell_1 = \ell_3$$

Therefore

$$M_b = M_c = -3/8P \frac{\ell_2^2 (2\ell_1 + \ell_2)}{4\ell_1^2 + 8\ell_1\ell_2 + 3\ell_2^2} \qquad [41]$$

where

M_b = moment in beam at support B

M_c = moment at support C

ℓ_1 = span between support A and B in inches

ℓ_2 = span between supports B and C in inches

P = concentrated center load.

Mid-span deflection can be obtained using the equation of virtual work (12)

$$Y\Big|_{\frac{\ell}{2}} = \int_0^{\ell} \frac{Mxmxdx}{EI} \qquad [42]$$

where

$Y\Big|_{\frac{\ell}{2}}$ = mid-span deflection

Mx = moment for each span as a result of load P

mx = unit moment caused by unit load P for each span

Referring to the moment distribution in Figure 19 and using equation [42] gives

$$Y\Big|_{\frac{\ell}{2}} = 2\int_{o}^{\frac{\ell_2}{2}} \frac{-\left(PA\frac{x_1}{1} - \frac{x_1}{1}\right)}{EI}\,dx + \int_{o}^{\frac{\ell_2}{2}} \frac{\left(\frac{Rx_2}{2} - PA\right)\left(\frac{x_2}{2} - A\right)}{EI}\,dx \qquad [43]$$

where

x_1 = distance along first span

x_2 = distance along second span

$$A = 3/8\left[\frac{(2\ell_1 + \ell_2)\ell_2^2}{4\ell_1^2 + 8\ell_1\ell_2 + 3\ell_2^2}\right]$$

Solving equation [43] for modulus of elasticity (E) gives

$$E = \frac{2P}{YI}\,A^2\left[\frac{\ell_1}{3} + \frac{\ell_2}{2}\right] - \frac{A\ell_2^2}{8} + \frac{\ell_2^3}{96} \qquad [44]$$

(ii) Statically Determinant Plywood Loading

Wall construction types II and III were not assembled with an overlapping covering and were therefore tested on simple supports. Modulus of elasticity was determined (12) from

$$E = \frac{P\ell^3}{48YI} \qquad [45]$$

where variables have been previously defined.

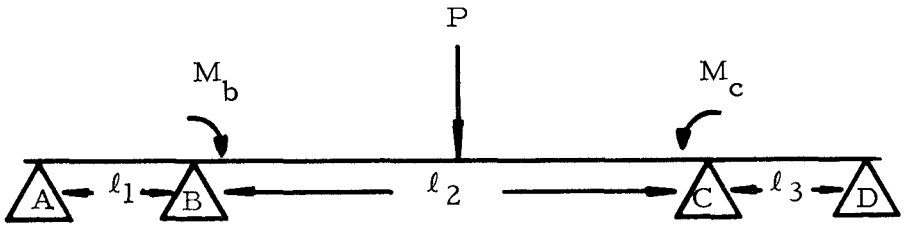

Figure 18. Plywood loading diagram for overlapping plywood test samples.

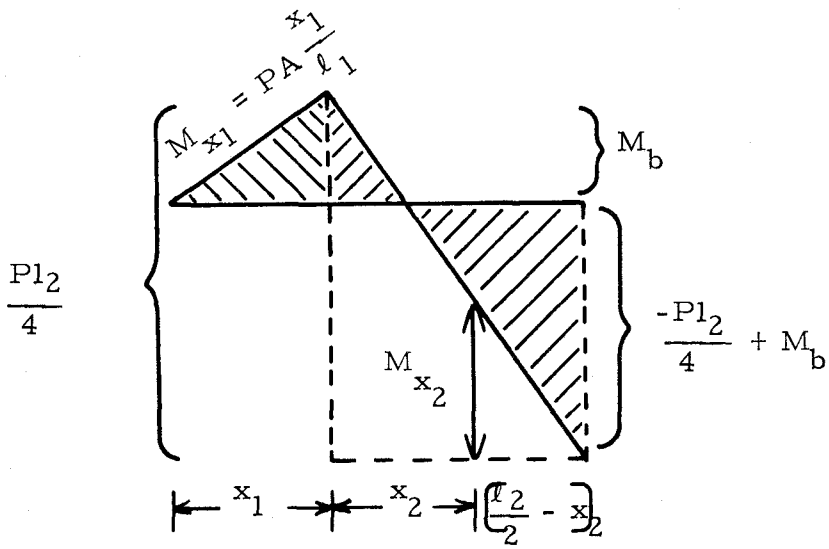

Figure 19. Moment distribution diagram.

Assembly Method

To avoid grouping of high or low stiffness materials in any one group of walls, a pattern of distribution was used. It consisted of ranking the studs in groups of five according to E from low to high. Then from the first five studs, one stud per construction type was assigned to the 3/8-inch covering class. The second group of five studs was assigned to the 5/8-inch covering class, putting one stud in each construction type. The third group of five studs went into the structural particleboard class with one in each construction type. The third group of five studs went into the structural particleboard class with one in each construction type. This procedure was repeated until all the studs had been assigned.

Modulus of elasticity of the plywood which was determined by dead-weighting. The plywood was assigned to walls in a manner similar to that of the studs except the plywood was already categorized as to covering class.

The MOE of the gypsum board was found to be uniform and no special assignment to the walls was made.

Testing Procedure

Free-end Conditions

Wall panels were first tested without end-restraint. An axial force applied below the longitudinal centerline of the stud and a lateral force concentrated at mid-span were applied to simulate forces P and Q in Figure 9. Figure 20 shows the apparatus designed for the wall tests. The L-shaped brackets shown in Figure 21 allow both an axial and lateral force to be applied with no end restraint. End loads were eccentrically applied through placement of the steel roller on the bracket. The applied eccentric force was 0.58 inches below the horizontal longitudinal centerline of the stud.

The axial force was applied by a four-inch air cylinder mounted to the frame of the apparatus. Axial loads were constant during testing. One end-support was mounted on a cart which could move horizontally during flexural testing (Figure 22). Several trial walls were tested to determine the proportional limit of the walls. It was determined from these trials that if the lateral load, Q, did not exceed 300 pounds the load-deflection relationship would be linear for the wall section.

The lateral center load was applied by a 60,000 pound capacity machine in which the support apparatus was placed. Figure 23 shows a wall in the testing machine.

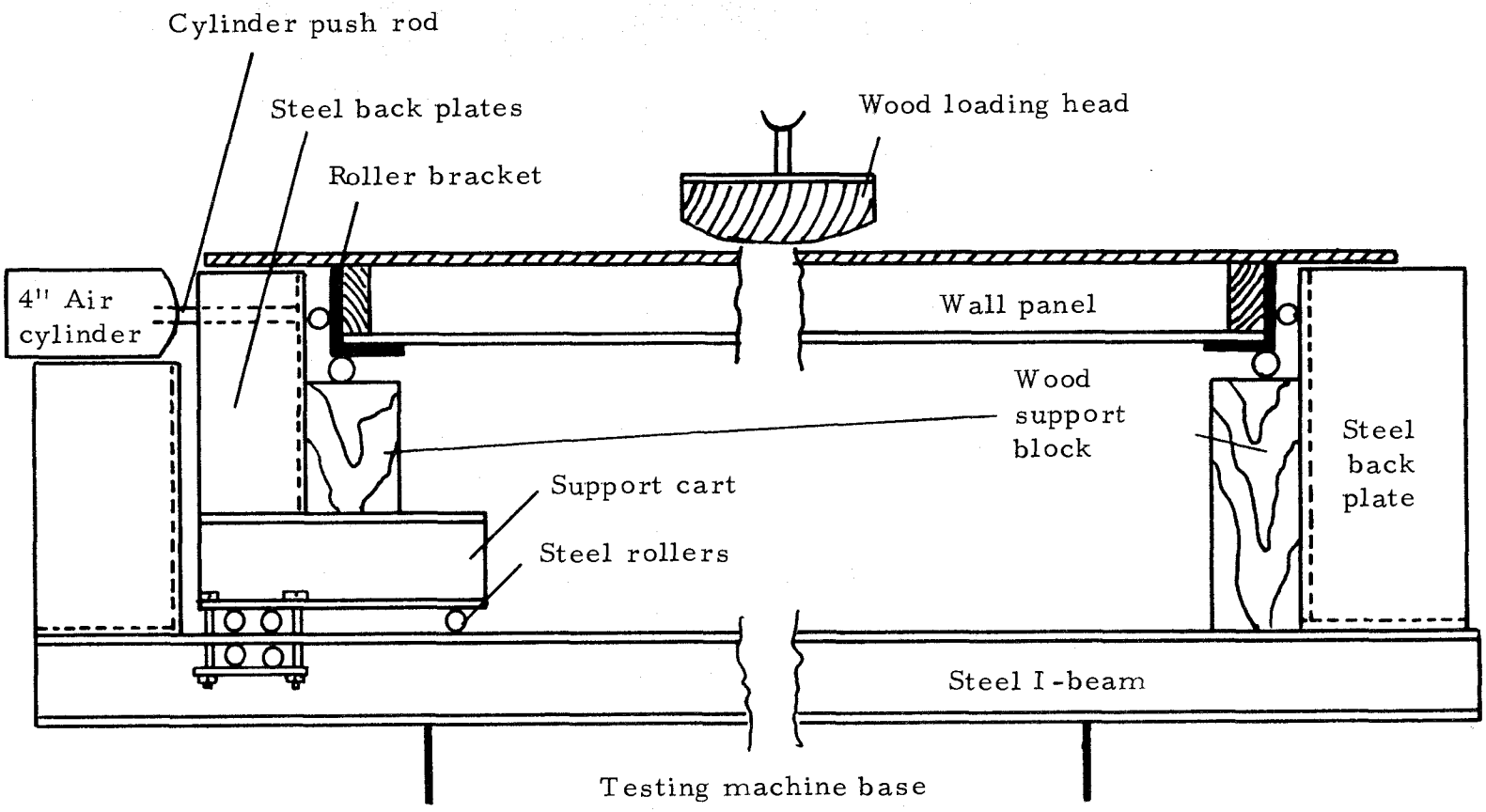

Figure 20. Test apparatus for testing wall panels with no end fixation.

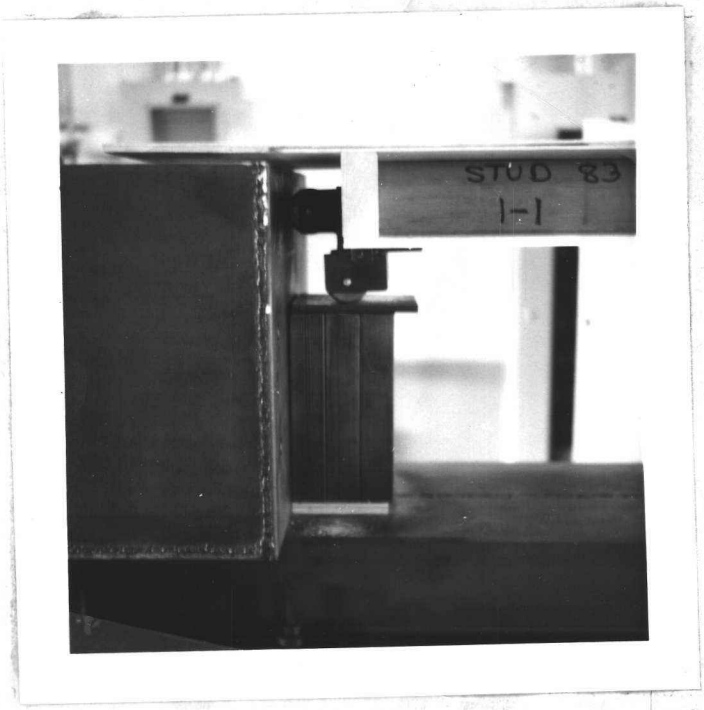

Figure 21. L-shaped bracket to allow free-end rotation.

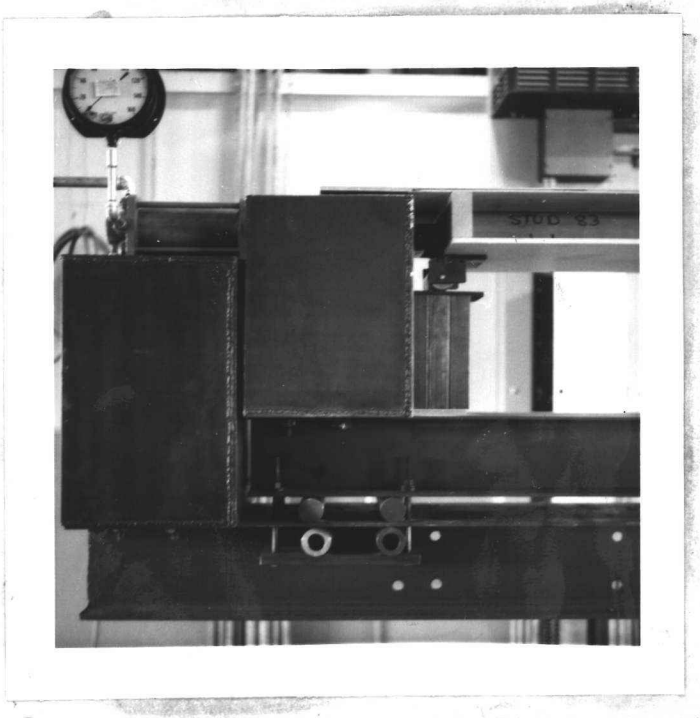

Figure 22. End support mounted on movable cart.

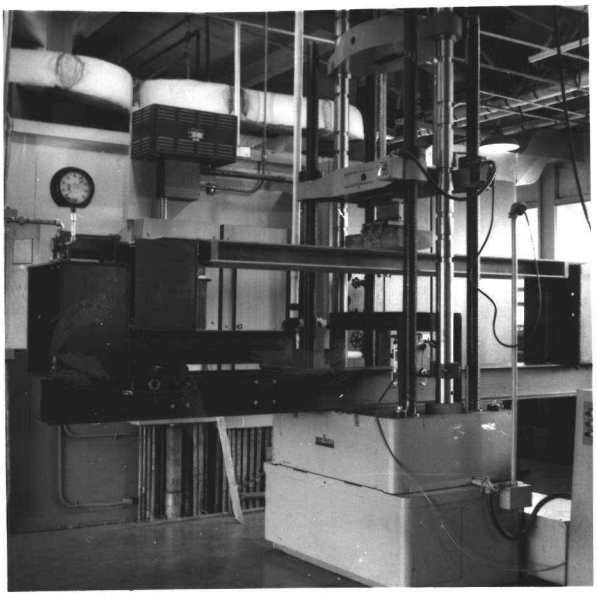

Figure 23. Wall Panel being tested in free-end condition.

Figure 24. Method of mounting the floors to the test frame.

In testing each wall in the free-end condition the wall was first subjected to a constant axial load of 442 pounds. With the axial force held constant the concentrated center load was slowly increased to 300 pounds while a load-deflection curve was recorded. The lateral load and the axial load were then released and a constant 1000 pound axial force was applied while the lateral load was again increased to 300 pounds and a second load-deflection curve recorded. Both loads were again released. The same procedure was followed for all wall tests. The test span was 95 1/2 inches and the headspeed was 0.34 inches per minute and was based on a fiber-strain rate of the stud of 0.001 inches per inch per minute (5). The 442 and 1002 pound loads were calculated to simulate typical one and two story wall loads in residential construction.

Fixed-end Conditions

After each wall was tested for free-end deflection, the floor sections were attached to the walls. The floors and walls were mounted in the test apparatus in a manner which prevented rotation of the floor joists during testing. Figure 24 of a deflected wall panel shows how the floors were mounted in the test frame.

Initial test procedure was the same in fixed-end wall tests as in the free-end tests. That is, each wall was tested as a beam-column with axial loads of 442 and 1002 pounds while the lateral load was

increased to 300 pounds. Subsequently the walls were tested to failure by means of increasing the lateral load at a rate of 0.34 inches per minute with a constant axial load of 1002 pounds.

RESULTS AND DISCUSSION

Elastic Properties of Wall Components

Stud Properties

The E of the studs ranged from 2.17×10^6 psi to 1.83×10^6 psi (Table 2). The mean E for the 45 studs was 1.99×10^6 psi with a mean moisture content of 7.3 percent. A standard deviation of E for the 45 studs was 84,000 psi indicating a close grouping of E for the studs.

Exterior Covering Properties

Elastic properties for the different wall coverings are given in Table 3. Generally the 3/8-inch plywood had the largest modulus of elasticity. The E for the coverings were figured from the actual moment of inertia (I) where the plywood constructions were converted to equivalent beams. This seems to indicate that by virtue of the construction and the ratio of the veneer plies, the relative E of the 3/8-inch was greater than that of the 5/8-inch plywood.

Table 4 shows the mean modulus of elasticity for the individual wall classifications. The values are the mean of three replications. Although the fixed-end tested values for 3/8-inch plywood appear to be higher than the free-end tested, the differences were not

Table 2. Modulus of elasticity of studs.

Covering group	Wall replica	Type I	Type II	Type III	Type IV	Type V
		10^6 psi	10^6 psi	10^6 psi	10^6 psi	10^6 psi
3/8" Plywood	1	2.07	2.12	1.91	2.07	1.98
	2	1.92	2.10	1.96	2.04	1.93
	3	1.89	1.95	2.05	1.93	
5/8" Plywood	1	2.04	2.06	2.15	2.00	1.93
	2	1.90	1.98	1.87	2.05	1.90
	3	1.98	1.93	2.03	1.94	1.83
1/2" Structural particleboard	1	2.01	2.01	2.10	1.98	1.92
	2	2.17	.98	2.16	2.02	1.90
	3	97	1.89	1.99	1.86	2.03

Table 3. Modulus of elasticity for exterior covering.

Covering group	Wall replica	Type I[1]	Type II[2]	Type III[2]	Type IV[1]	Type V[1]
		10^6 psi	10^6 psi	10^6 psi	10^6 psi	10^6 psi
3/8" Plywood	1	2.51	1.99	2.18	2.53	2.54
	2	2.58	2.22	2.32	2.64	2.67
	3	2.76	2.42	2.51	2.84	2.88
5/8" Plywood	1	1.65	1.83	1.95	1.81	1.85
	2	1.86	2.00	2.03	1.87	1.88
	3	1.96	2.05	2.12	1.99	2.05
1/2" Structural particleboard	1	.53	.60	.57	.52	.52
	2	.51	.57	.56	.49	.49
	3	.47	.51	.51	.46	.46

[1] tested with fixed-ends supports

[2] tested with simple supports

Table 4. Average modulus of elasticity for covering groups.

Covering group	Fixed-End Evaluation[1]			Free-End Evaluation[2]	
	Type I	Type IV	Type V	Type II	Type III
	10^6 psi	10^6 psi	10^6 psi	10^6 psi	10^6 psi
3/8" Plywood	2.62	2.67	2.70	2.21	2.34
5/8" Plywood	1.82	1.89	1.93	1.96	2.00
1/2" Structural particleboard	.50	.49	.49	.56	.55

[1] Values calculated from equation (39)

[2] Values calculated from equation (40)

statistically significant. Similarly there is no significant difference between any construction type of either the 5/3-inch plywood or the 1/2-inch structural particleboard covering groups.

Elastic properties of the covering groups, particularly the 3/8-inch plywood are higher than values reported in the literature (22). It is believed that plate action resulting from 16-inch specimen widths may have been the reason for the high E values.

Free-End Wall Study

Wall Panel Properties

Table 5 shows a summary of the mid-span deflections for the wall groups at a concentrated center load of 300 pounds. Type V walls (glued) were approximately 100 percent stiffer than wall panels assembled with either nails or staples. Comparing types I and IV, little apparent difference existed between the stiffness of the nailed and stapled panels.

The 5/8-inch plywood covering increased the free-end panel stiffness by an average of nine percent over the 3/8-inch plywood and six percent over the 1/2-inch structural particleboard. No significant difference was apparent between the stiffnesses of the 3/8-inch plywood and the 1/2-inch structural particleboard.

Table 5. Summary of average mid-span deflections.

Covering group	Axial load (pounds)	Mid-Span Deflections *, in.				
		Type I	Type II	Type III	Type IV	Type V
3/8" Plywood	442	.422	.435	.451	.449	.211
	1002	.391	.432	.401	.432	.201
5/8" Plywood	442	.406	.392	.445	.417	.176
	1002	.374	.351	.402	.391	.171
1/2" Structural particleboard	442	.396	.444	.463	.431	.244
	1002	.350	.384	.402	.407	.232

*Deflections are at 300 lb concentrated center load in inches

Tables 6 and 7 give the iterated values of lambda ($\frac{k\ell}{2}$) for the 442-pound and 1002-pound axial loads respectively. These values are dependent upon the interaction between the loads and the rigidity EI. These values of lambda were used in calculation of the coefficient of end restraint, λ.

Fixed-end Wall Study

Coefficient of End Restraint

The coefficients of end restraints for 442-pound and 1002-pound axial loads are given in Tables 8 and 9. The coefficients for the 442-pound axial load ranged from -72, 100 to 109, 000.

It was stated earlier in this paper that the coefficient of end restraint, α, might vary from zero to plus infinity. However, some negative values were calculated from these tests. This is possible because of the way in which tests were run. A negative value for the coefficient of end restraint means that greater deflection occurred in the fixed-end tests than in the free-end tests. Recall that the free-end tests were used to establish values of λ which were used in the solution of the α equation which in turn was based on fixed-end tests. Therefore the free-end test values influence the calculated results of α in the fixed-end tests. It is theorized that the greater deflection values that resulted from fixed-end tests in some instances were

Table 6. Lambda $\frac{k\ell}{2}$ values* when axial load was 442 pounds.

Covering	Wall	Type I	Type II	Type III	Type IV	Type V
3/8" Plywood	1	.29166	.29478	.29322	.28851	.20757
	2	.27248	.26908	.28596	.28946	.20666
	3	.28372	.29601	.29632	.29570	.18992
5/8" Plywood	1	.27316	.27350	.29135	.27915	.17801
	2	.27228	.27248	.29724	.28177	.19092
	3	.28660	.27248	.28145	.28242	.18381
1/2" Structural particleboard	1	.26527	.29322	.29229	.29177	.21207
	2	.29135	.29385	.28596	.29009	.21207
	3	.26492	.28177	.30806	.28469	.22035

*Values were not rounded because iteration carried values to fifth decimal place before iteration ceased.

Table 7. Lambda $\frac{k\ell}{2}$ values* when axial load was 1002 pounds.

Covering	Wall	Type I	Type II	Type III	Type IV	Type V
3/8" Plywood	1	.41941	.42089	.42768	.43197	.31060
	2	.40429	.40481	.41495	.43292	.31762
	3	.42672	.43527	.42236	.44452	.28288
5/8" Plywood	1	.40686	.39856	.42430	.41093	.28050
	2	.40378	.39380	.42672	.42040	.28836
	3	.41445	.39645	.41645	.41345	.32981
1/2" Structural particleboard	1	.39112	.42040	.42284	.41345	.32981
	2	.40840	.41793	.41345	.43197	.32038
	3	.38785	.40222	.43002	.42864	.32782

*Values were not rounded because iteration carried values to fifth decimal place before iteration ceased.

Table 8. Coefficient of end restraint when axial load was 442 pounds.*

Construction type	Wall no.	Covering 3/8" plywood	5/8" plywood	1/2" particle-board
I	1	30000	4800	-69800
	2	8000	37700	1900
	3	-5700	28500	-71700
II	1	24600	9400	13300
	2	-72100	14000	5900
	3	3500	31500	11000
III	1	21600	15800	29300
	2	17000	25200	1300
	3	21200	5000	27400
IV	1	11200	42100	9700
	2	11100	37600	8000
	3	15900	26300	-16200
V	1	39400	56000	20300
	2	58800	68600	22000
	3	17600	109000	-2000

*Minus sign indicates greater deflection resulted from fixed end condition.

Table 9. Coefficient of end restraint when axial load was 1002 pounds.*

Construction type	Wall no.	Covering 3/8" plywood	5/8" plywood	1/2" particle-board
I	1	900	3600	-120000
	2	-2300	22800	-76300
	3	-22700	-4100	-120000
II	1	3100	-16900	-31300
	2	-27000	-29600	-51400
	3	-17600	-8400	-60600
III	1	5700	-600	4200
	2	-4800	-7400	-9200
	3	14500	-17600	4400
IV	1	-10000	19400	-22900
	2	8600	22500	-13100
	3	9500	9200	-14200
V	1	4600	42100	23500
	2	51600	35000	-4000
	3	-20800	59000	-1800

*Minus sign indicates greater deflection resulted from fixed end condition.

because the axial load did not in actuality transfer to the stud in the same manner as was assumed in theory. Figure 25 shows how the axial load was assumed to be applied to the mudsill and eventually to the stud through the floor section. It is specified in ASTM standards (4) that compressive test loads on walls be applied one-third of the distance from the interior face of the stud. This accounts for the eccentricity of the axial force application. If this eccentricity was as shown in Figure 25, the axial force would cause an upward deflection of the wall section. In free-end tests such an upward deflection did occur upon application of the axial force. However, in the fixed-end tests deflection as a result of the axial force alone, although small, appeared erratic, sometimes resulting in no deflection and other times causing slight downward deflections. It appears that the axial force in some instances through deflection of the mudsill and inherent imprecision in assembly of wall and floor sections was transferred at least in part from the mudsill to the header and sheathing and therefore to the upper part of the stud. This re-location of the point of application of the axial force to the stud would cause a deflection in the downward direction. In instances where this downward deflection as a result of the axial load summed with the deflection as a result of the lateral load to cause a deflection greater that the deflection in the free-end tests, a negative coefficient of end restraint would result.

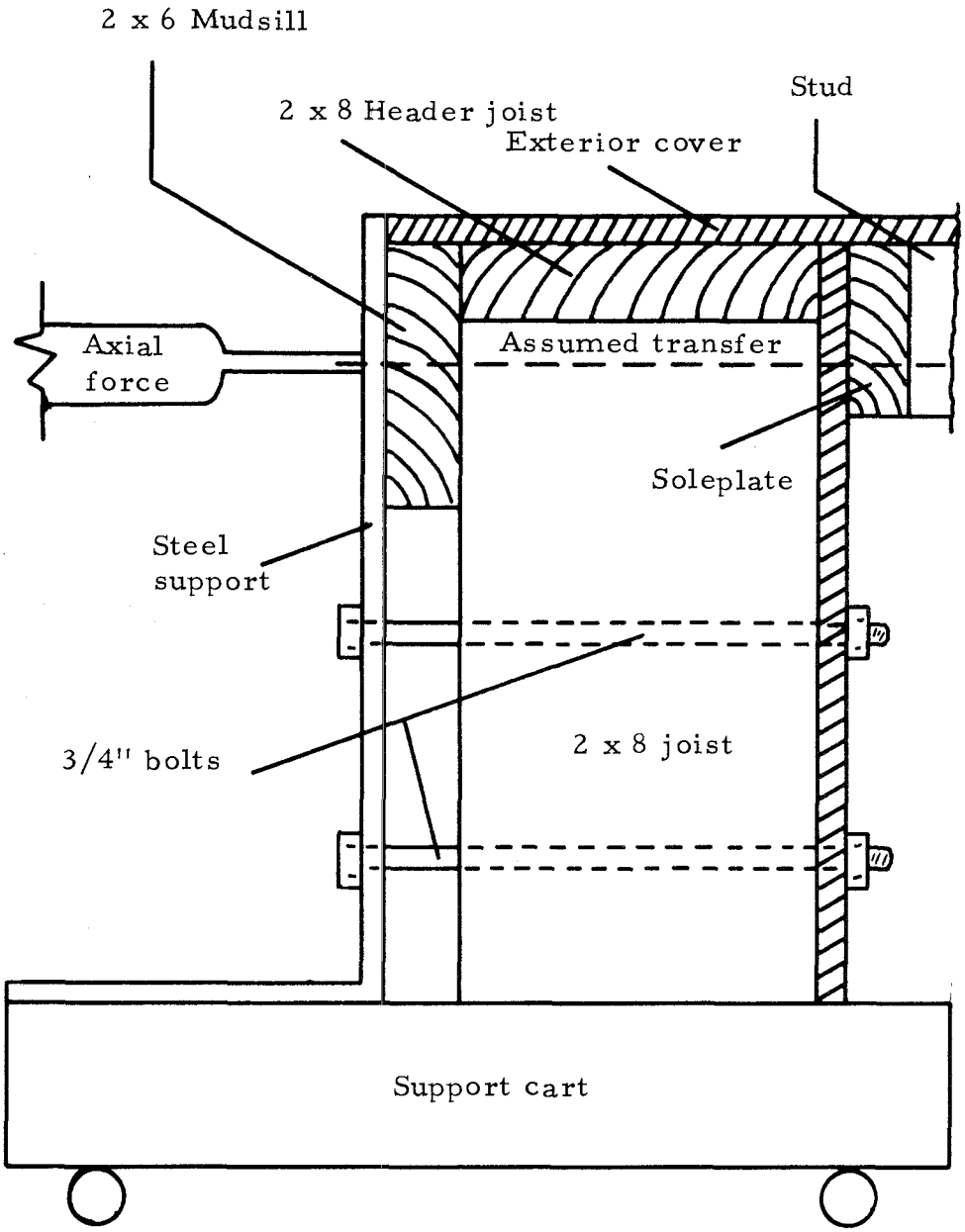

Figure 25. Schematic showing the assumed transfer of force action.

At lateral loads some undetermined amount higher than 300 pounds, it is probable that all coefficients α would be positive because the effect of end-fixity would be greater and the axial-force-caused increment of deflection would be less significant in the total measured deflection.

The fact that α may be negative in some instances does not negate its application. This fact merely emphasizes that restraint may be erratic or non-existent at or near design loads and that end fixity should be ignored in certain construction types.

The coefficient of end restraint with a 1002-pound axial load given in Table 9 ranges from -120,000 to 59,000. The greater number of negative coefficients substantiate the idea that the eccentricity of the axial load present in the fixed end tests is opposite from that in the free-end tests.

Coefficients of end restraint are summarized according to construction type, exterior covering and axial load in Table 10. These values are the mean of three wall replications represented in Figures 26 and 27.

An analysis of variance table has been included in Appendix D. Several analyses were performed, the first being a split-plot analysis. From this analysis only one main effect was observed in the experiment. It was found that α decreased with an increase in end-load within coverings for all types of construction. However, most

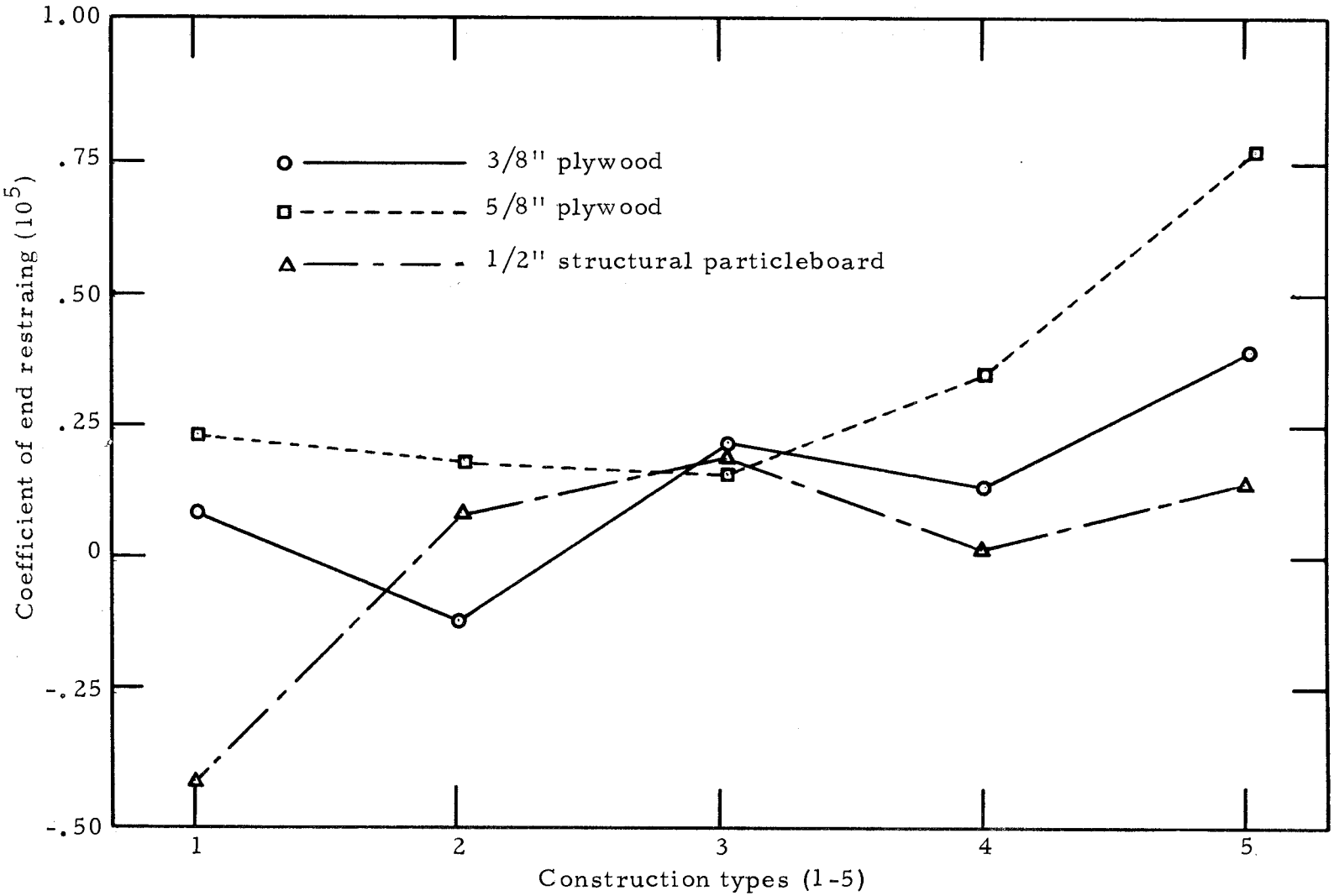

Figure 26. Coefficients of end restraint when axial load is 442 lbs.

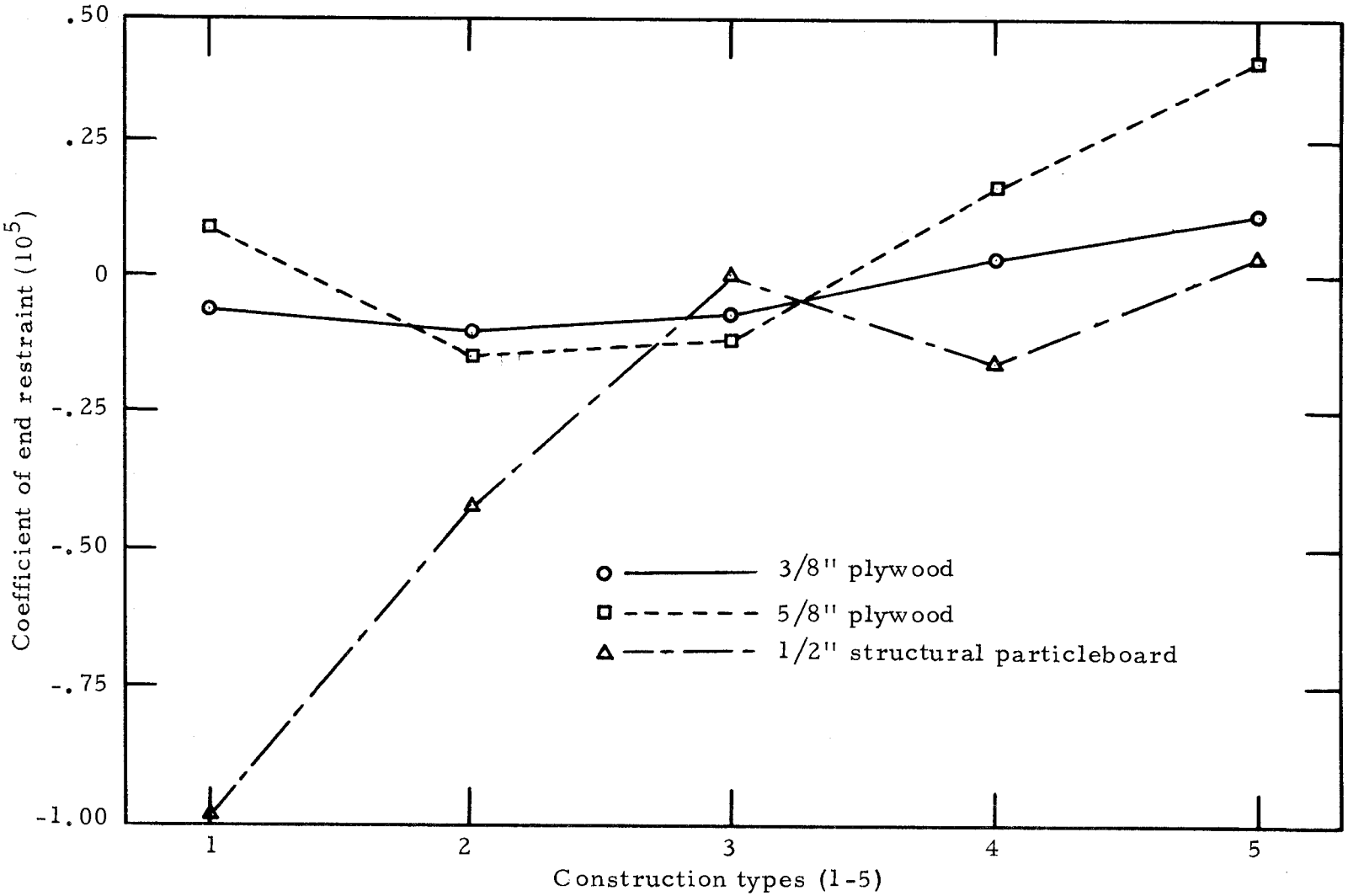

Figure 27. Coefficients of end restraint when axial load is 1002 lbs.

Table 10. Average coefficient of end restraint summarized by construction type, exterior covering, and axial load.

Construction type	Covering		
	3/8" plywood	5/8" plywood	1/2" particleboard
		442 lb. load	
I	10800	23700	-46600
II	-14700	18400	10100
III	20000	15300	19300
IV	12700	35300	500
V	38600	77900	13500
		1002 lb. load	
I	-7700	7400	-105500
II	-13800	-18300	-47800
III	-4500	-8500	-200
IV	2700	17000	-16700
V	11800	45400	5900

interactions were significant and several additional analyses are presented to assist in describing the various conditional effects. A three-factor analysis (see Appendix D) showed interaction between load and construction type for 1/2-inch particleboard. This means that the main effect of load on α must be modified. In other words, an increase in end-load caused a decrease in α for only those types of construction with plywood covering. Item 1, Table 11 summarizes this effect.

Two other effects can be found from the analysis in Appendix D. A within-load-and-covering analysis showed that α was affected by construction type for the 5/8-inch plywood and the 1/2-inch particleboard. The effect was present for 5/8-inch plywood at both end loads at the 5 percent significance level, and was significant for particleboard at the 1 percent level for the 1002 pound end-load and at the 5 percent level for the 442 pound end-load. Means of replications for the type effect are shown in Table 10. Note that in all instances except one Type V (glued) walls had the highest average value of α. It is emphasized that the 3/8-inch plywood data was not significant at the 5 percent level.

Item 2, Table 11 shows the overall means for three replications and three coverings for four construction types. The effect of covering was significant at the 1 percent level for all four construction types. Item 2, Table 11 shows that 5/8-inch plywood gave the

Table 11. Wall property summary.

1. Effect of end-load within coverings

End load	3/8" plywood	5/8" plywood
442 lb.	13500	34100
1002 lb.	-2300	8600

2. Effect of covering within load and type

End load	Covering	Average coefficient of end restraint type			
		I	II	IV	V
442 lb.	3/8" ply	10800	-14700	12700	38600
	5/8" ply	23700	18400	35300	77900
	1/2" p. board	-46600	10100	500	13500
1002 lb.	3/8" ply	-7700	-13800	2700	11800
	5/8" ply	7400	-18300	17000	45400
	1/2" p. board	-105500	-47800	-16700	5900

Table 12. F-statistic summary of the main effects of covering, load, and construction type on coefficient of end-restraint.

Analysis	Source of Variation	Calculated F
Split-plot	Load[1]	135.10**[2]
w/in Cover[3]		
3/8" plywood	Load	14.48**
5/8" plywood	Load	37.79**
w/in Loads[4]		
w/in Load and Cover[5]		
5/8" plywood, 442 lb. load	Type	3.28*
5/8" plywood, 1002 lb. load	Type	3.05*
1/2" p.b., 442 lb. load	Type	3.53*
1/2" p.b., 1002 lb. load	Type	10.41**
w/in Load and Type[6]		
Type I, 442 lb. load	Cover	32.23**
Type I, 1002 lb. load	Cover	86.69**
Type II, 442 lb. load	Cover	6.85**
Type II, 1002 lb. load	Cover	7.85**
Type IV, 442 lb. load	Cover	7.23**
Type IV, 1002 lb. load	Cover	6.62**
Type V, 442 lb. load	Cover	24.31**
Type V, 1002 lb. load	Cover	10.46**

[1]Interaction T X C, L X C, L X T X C but no interaction L X T.

[2]*Significant at the 5% level, ** significant at the 1% level.

[3]Interaction for 1/2" particleboard L X T.

[4]Interaction T X C at both loads.

[5]3/8" plywood values not significant at the 5% level.

[6]Types II, III, and V not considered significant.

highest values of the coefficient of end-restraint, except in one instance (type II, 1002 lb. load). Except for one instance (type II, 442 lb. load), 1/2-inch particleboard resulted in the lowest coefficient of end-fixity. Therefore, except for two instances (both end-loads for type II construction) 3/8-inch plywood resulted in a coefficient of end-fixity between that of 1/2-inch particleboard and 5/8-inch plywood.

Effect of covering was not significant at either load level for type III construction. Type III construction had a steel strap fastening the wall panel to the header (see Figure 13).

Wall Failure

Figure 28 shows the average ultimate lateral force for wall sections simultaneously subjected to a 1002-pound axial force. Glued wall panels were the strongest as a group. Construction type II walls as a group were the weakest. Walls constructed with 5/8-inch plywood sheathing were significantly stronger at the 5 percent level than the 3/8-inch plywood and the structural particleboard walls. The walls sheathed with structural particleboard appear to be slightly stronger than those with 3/8-inch plywood, but the difference was not statistically significant at the 5 percent level.

The mode of failure of the walls varied depending upon construction type and exterior covering. Typical failure of wall types II and

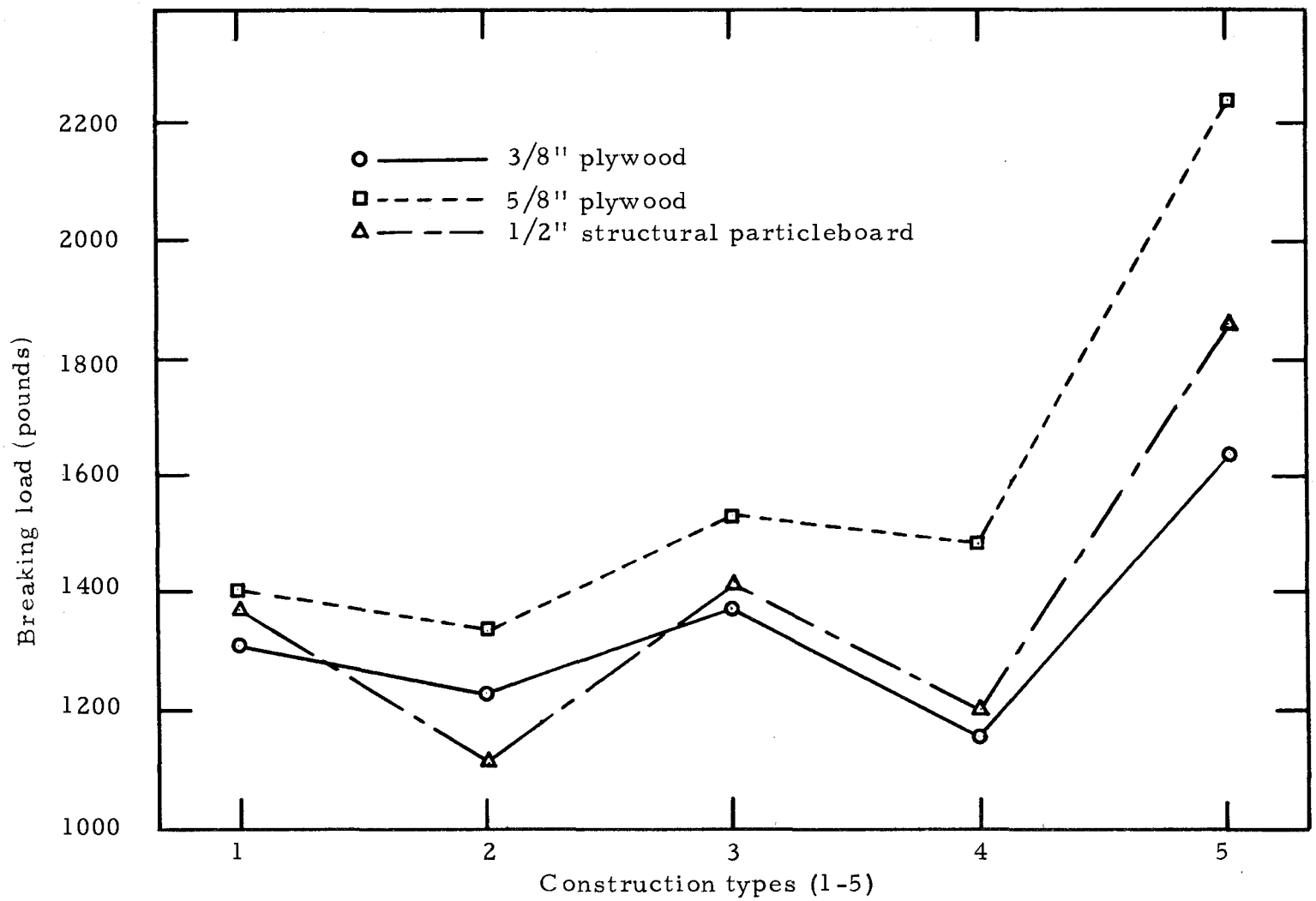

Figure 28. Average breaking loads for walls with concentrated center load and 1002 lbs. axial load (fixed-ends).

Figure 29. Shear separation failure between the stud and soleplate.

Figure 30. Typical bending failure of the wall panels with an overlapping construction.

III occurred as shear separation at the stud-soleplate joists instead of a simple bending failure of the stud and covering materials (Figure 29).

Bending failures were typical for walls with an overlapping exterior covering. The overlapping covering no doubt reduced vertical shear forces at the stud-soleplate connection and the maximum bending stress was reached before the stud sheared from the soleplate. A typical bending failure of the walls with overlapping sheathing is shown in Figure 30.

CONCLUSIONS

1. Within the plywood coverings an increase in axial loading caused a decrease in the coefficient of end-restraint.
2. The type of construction affected α for the 5/8-inch plywood and the 1/2-inch particleboard. The significance level for this variable was 5 percent except for the 1002 pound end-load for particleboard which was 1 percent.
3. In one instance (442 pound end load, 1/2-inch particleboard) one of five values of α was higher than α for glued construction but in all other instances α was higher for glued construction, therefore it is concluded that gluing results in high values for coefficients of end-fixity for 5/8-inch plywood and 1/2-inch particleboard. Because the stiffness of plywood is greater than particleboard, one would expect that the effect also would be true for 3/8-inch plywood, but it was not shown in this experiment.
4. Coverings affected the value of α for types I, II, IV, and V constructions. In types I, IV, and V the covering overlapped the header. Type II covering did not overlap the header. Type III coverings did not overlap the header but a steel trap tied the wall panel to the header. It is further concluded that except for type III panels the 5/8-inch plywood, 3/8-inch plywood, and

1/2-inch particleboard coverings resulted in the highest, intermediate, and lowest coefficients of end-restraint, respectively. No reason is apparent for the insignificance of covering effect for type III panels.

5. The ultimate lateral load for glued walls was greater for glued than nailed or stapled walls.

BIBLIOGRAPHY

1. Adam, N. R. Plywood shear walls. American Plywood Association Laboratory Report 105. Tacoma, Wash. 1972.

2. Amana, E. J. and L. G. Booth. Theoretical and experimental studies on nailed and glued plywood stressed-skin components: Part I. London, Journal of the Institute of Wood Science 4(1): 43. 1967.

3. _____. Theoretical and experimental studies on nailed and glued plywood stressed-skin components: Part II. London, Journal of the Institute Wood Science 4(20):19. 1968.

4. American Society for Testing and Materials. 1972 Annual Book of ASTM Standard. Part 14. Philadelphia, 1972. 682 p.

5. _____. 1970 Book of ASTM Standards. Part 16. Philadelphia, 1970. 894 p.

6. Anderson, L. O. Guides to improved framed walls for houses. Madison, U. S. Forest Products Laboratory, 1965. 28 p. (Research paper FPL 31).

7. Bendlesen, B. A. Strength and related properties of a randomly selected sample of second-growth Redwood. Madison, U. S. Forest Products Laboratory, 1967. 26 p. (Report No. 52).

8. Doyle, D. V. Performance of nail-glued joints of plywood to solid wood. Madison, U. S. Forest Products Laboratory, 1964. 1 p. (Research note FPL 042).

9. Fritz, E. Mechanical properties of second-growth redwood and comparison with virgin timber. Philadelphia, American Society for Testing and Materials, 1950. p. 30-32. (Bulletin 169).

10. Kuenzi, E. W. Theoretical design of a nailed or bolted joint under lateral load. Madison, U. S. Forest Products Laboratory, 1955. 24 p. (Report No. D1951).

11. Kuenzi, E. W. and T. L. Wilkinson. Composite beams -- effect of adhesive on fastener rigidity. Madison, U. S. Forest Products Laboratory, 1971. 21 p. (Research Paper FPL 152).

12. Laursen, Harold I. Structural analysis. New York, McGraw Hill, 1969. 496 p.

13. Markwardt, L. J. and T. R. Wilson. Strength and related properties of wood grown in the United States. Washington, D.C., U. S. Department of Agriculture, 1935. 99 p. (Bulletin 47a).

14. Newmark, N. M. and others. Tests and analysis of composite beams with incomplete interaction. Westport, CT, Society for Experimental Stress Analysis 9(1):75-92. 1951.

15. Polensek, A. and G. H. Atherton. Compression-bending tests of walls with utility grade engelmann spruce studs and properties for two species of utility grade studs. Corvallis, School of Forestry, Oregon State University, 1973. 27 p. (Limited distribution report).

16. Salvadori, M. G. and M. L. Baron. Numerical methods in engineering. Englewood Cliffs, N. J., Prentice-Hall, 1961. 302 p.

17. Scholten, J. A. and E. G. Molander. Strength of nailed joints in frame walls. Agricultural Engineering 31(11):551-555. 1950.

18. Scholten, J. A. Strength of wood joints made with nails, staples, or screws. Madison, U. S. Forest Products Laboratory, 1965. 1 p. (Research note FPL 0100).

19. Siess, C. P. and others. Studies of slab and beam highway bridges: Part III. Champaign, Engineering Experiment Station, University of Illinois, 1952. 115 p.

20. Timoshenko, S. P. and J. M. Gere. Theory of elastic stability. New York, McGraw-Hill, 1961. 541 p.

21. U. S. Department of Housing and Urban Development. Minimum property standards for one and two living units. Washington, D. C., Federal Housing Administration, 1966. 315 p.

22. U. S. Forest Products Laboratory. Wood handbook. Madison, U. S. Department of Agriculture, 1955. 528 p. (Agriculture handbook No. 72).

APPENDICES

APPENDIX A

PRACTICAL APPLICATION OF THE COEFFICIENT OF END RESTRAINT TO DETERMINE DEFLECTION

APPENDIX A

PRACTICAL APPLICATION OF THE COEFFICIENT OF END RESTRAINT TO DETERMINE DEFLECTION

This is a discussion of how the coefficient of end restraint, α, can be applied to predict deflection of stud walls.

For purposes of application, we will assume the designer is given or can calculate the lateral load, the axial load, the rigidity of the composite wall, and the degree of end-fixation. Knowing these properties and given the beam-column in Figure 31, which is assumed to have partially restrained ends, the designer can estimate the deflection for a given set of conditions.

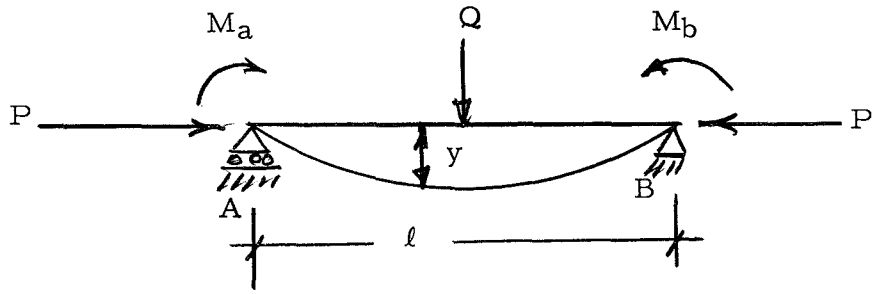

Figure 31. Beam-column diagram simulating exterior wall conditions.

The moment Ma can be determined from Timoshenko (20) by,

$$Ma = \frac{-\theta oa\left(\frac{1}{\beta} + \frac{1}{3EI}\psi(u)\right) + \theta ob\left(\frac{1}{6EI}\phi(u)\right)}{\left(\frac{1}{\alpha} + \frac{1}{3EI}\psi(u)\right)\left(\frac{1}{\beta} + \frac{1}{3EI}\psi(u)\right) - \left(\frac{1}{6EI}\phi(u)\right)^2} \qquad [46]$$

where

Ma	=	Partial restraining moment, lb-in.
β	=	Coefficient of end restraint at B, lb-in./radian
α	=	Coefficient of end restraint a A, lb-in./radian
E	=	Modulus of elasticity of beam-column, lb/in
I	=	Moment of inertia of beam-column, in^4
θ_{oa}	=	Angle of rotation of hinged beam-column at end A due to the load Q only
θ_{ob}	=	Angle of rotation of hinged beam-column at end B due to the load Q only
u	=	$\frac{k\ell}{2} = \frac{\ell}{2} \frac{P}{EI}$
P	=	Column load, lbs.
ℓ	=	Beam span, inches
$\phi(u)$	=	$\frac{3}{u}\left(\frac{1}{\sin 2u} - \frac{1}{2u}\right)$
$\psi(u)$	=	$\frac{3}{2u}\left(\frac{1}{2u} - \frac{1}{\tan 2u}\right)$

P, Q, and ℓ are known from the conditions of the design problem. EI of the beam-column must be known or can be calculated from simple tests for various constructions, and the angles of rotations θ_{oa} and θ_{ob} can be calculated for example by means of the area-moment method (12). This leaves α and β to be determined. Values of α were obtained for several construction types in this study. For symmetrical beam-columns Ma equals Mb and therefore α will equal β and equation [46] can be somewhat simplified.

Using equation [28] and letting e = o gives

$$y\Big|_{\frac{\ell}{2}} = \frac{-Ma}{P}\cos\frac{k\ell}{2} - \left[\frac{\frac{Ma}{P}k\sin\frac{k\ell}{2} - \frac{Q}{2P}}{k\cos\frac{k\ell}{2}}\right]\sin\frac{k\ell}{2} - \frac{Q\ell}{4P} + \frac{Ma}{P} \qquad [47]$$

or

$$y_{\frac{\ell}{2}} = \frac{Ma}{P}\cos u - \left(\frac{Ma}{P}\sin u - \frac{Q}{2Pk}\right)\tan u - \frac{Q\ell}{4P} + \frac{Ma}{P} \qquad [48]$$

where all the terms have been previously defined.

From the above development it can be seen that once Ma has been obtained using predetermined coefficients of end restraint, the deflection of similar systems can be analyzed. The difficulty of predicting deflections of partially fixed composite beam-columns by this or any other method is that one must know EI, α and β. Information presented in this paper is a beginning in the development of information on end-fixity of wood-frame wall systems.

APPENDIX B

COMPUTER PROGRAM

```
      PROGRAM ENDFIX
      REAL LDPL
      DIMENSION NSPEC(45),FRDEF1(45),FRDEF2(45),FXDEF1(45),
     1FXDEF2(45),ASLDEF(45),ALDINF1(45),ADFINF1(45),ALDINF2
     2(45),ADFINF2(45),BSLDEF(45),BLDINF1(45),BDFINF1(45),
     3BLDINF2(45),BDFINF2(45),CSLDEF(45),CLDINF1(45),
     4CDFINF1(45),CLDINF2(45),CDFINF2(45),DSLDEF(45),
     5DLDINF1(45),DDFINF1(45),DLDINF2(45),DDFINF2(45),
     6LDPL(45),DEFPL(45),FAIL(45),PLYDF1(45),PLYDF2(45),
     7PLYDF3(45),PLYLD(45),STUDDF(45),STUDW(45),STUDT(45),
     8XMC(45)
      DIMENSION STMDE(45),PLYMDE(45), AVFRDF1(15),
     1AVFRDF2(45),AVFXDF2(45),ASLP1(45),ASLP2(45),ASLP3(45),
     2BSLP1(45),BSLP2(45),BSLP3(45),CSLP1(45),CSLP2(45),
     3CSLP3(45),DSLP1(45),DSLP2(45),DSLP3(45),X1N(45),X2N(45),
     4ALPHA1(45),ALPHA2(45),AVFXDF1(15),ID(45)
      N=45
      DO 10 I=1,N
      READ(40,1) NSPEC(I),FRDEF1(I),FRDEF2(I),FXDEF1(I),
     1FXDEF2(I),ASLDEF(I),ALDINF1(I),ADFINF1(I),ALDINF2(I),
     2ADFINF2(I),BSLDEF(I),BLDINF1(I),BDFINF1(I),BLDINF2(I)
     3,BDFINF2(I),ID(I),CSLDEF(I),CLDINF1(I),CDFINF1(I),CLDINF2(I),
     4CDFINF2(I),DSLDEF(I),DLDINF1(I),DDFINF1(I),DLDINF2(I),
     5DDFINF2(I),LDPL(I),DEFPL(I),FAIL(I),PLYDF1(I),PLYDF2(I),
     6PLYDF3(I),PLYLD(I),STUDDF(I),STUDW(I),STUDT(I),XMC(I)
    1 FORMAT(I3,5F4.3,F4.0,F4.3,F4.0,F4.3,F4.3,F4.0,F4.3,
     1F4.0,F4.3/I2,1X,F4.3,F4.0,F4.3,F4.0,F4.3,F4.3,F4.0,F4.3,
     2F4.0,F4.3,F4.0,F4.2,F5.0/3X,3F4.3,F3.0,F4.3,2F5.3,F3.1)
```

```
 10 CONTINUE
    DO 20 I=1,N
    STMOE(I)=9893164.06/(STUDDF(I)*STUDT(I)*STUDW(I)**3)
    XID=ID(I)
    X=XID/3.
    IX=ID(I)/3
    XX=IX
    DIF=X-XX
    IF(DIF.EQ.0.)GO TO 195
    IF(DIF.GT.0.5)GO TO 196
    IF(DIF.LT.0.5)GO TO 197
195 XI=.1667
    GO TO 198
196 XI=.2162
    GO TO 198
197 XI=.05574
198 IF(ID(I).LT.4.OR.ID(I).GT.9)GO TO 202
    PLYMOE(I)=15061.29*PLYLD(I)/((PLYDF1(I)+PLYDF2(I)+
   1PLYDF3(I))/3.)/XI
    GO TO 20
202 PLYMOE(I)=4509.90*PLYLD(I)/XI/((PLYDF1(I)+PLYDF2(I)+
   1PLYDF3(I))/3.)
 20 CONTINUE
    I=0.
    DO 30 J=1,15
    AVFRDF1(J)=0.
    AVFRDF2(J)=0.
    AVFXDF1(J)=0.
    AVFXDF2(J)=0.
    DO 29 K=1,3
    I=I+1
    AVFRDF1(J)=AVFRDF1(J)+FRDEF1(I)
    AVFRDF2(J)=AVFRDF2(J)+FRDEF2(I)
    AVFXDF1(J)=AVFXDF1(J)+FXDEF1(I)
    AVFXDF2(J)=AVFXDF2(J)+FXDEF2(I)
 29 CONTINUE
    AVFRDF1(J)=AVFRDF1(J)/3.
    AVFRDF2(J)=AVFRDF2(J)/3.
    AVFXDF1(J)=AVFXDF1(J)/3.
    AVFXDF2(J)=AVFXDF2(J)/3.
 30 CONTINUE
    DO 40 I=1,45
    ASLP1(I)=ALDINF1(I)/ADFINF1(I)
    ASLP2(I)=ALDINF2(I)/ADFINF2(I)
    ASLP3(I)=300./ASLDEF(I)
    BSLP1(I)=BLDINF1(I)/BDFINF1(I)
    BSLP2(I)=BLDINF2(I)/BDFINF2(I)
    BSLP3(I)=300./BSLDEF(I)
    CSLP1(I)=CLDINF1(I)/CDFINF1(I)
    CSLP2(I)=CLDINF2(I)/CDFINF2(I)
    CSLP3(I)=300./CSLDEF(I)
    DSLP1(I)=DLDINF1(I)/DDFINF1(I)
    DSLP2(I)=DLDINF2(I)/DDFINF2(I)
    DSLP3(I)=300./DSLDEF(I)
 40 CONTINUE
    WRITE(2,300)
300 FORMAT(1H1,10X,≠THE NEWTON TANGENT METHOD WAS USED TO≠
   1≠ CONVERGE THE APPROXIMATED KL/2≠,/10X,≠VALUE≠
   2≠ TO WITHIN 1/10,000 OF THE TRUE VALUE≠)
    I=0
    D=.0001
  6 I=I+1
    IF(45-I)2,9,9
```

```
  9 X1=0.25035
  5 FX1=0.58*(-COS(X1)-SIN(X1)/COS(X1)*SIN(X1)+1)+16.20
   1*(SIN(X1)/COS(X1)/X1-1)-FRDEF1(I)
    DYDX1=0.58*SIN(X1)/(COS(X1)*COS(X1))+16.20/(COS(X1)
   1*COS(X1)*X1*X1)*(X1-SIN(X1)*COS(X1))
    TX1N=X1-FX1/DYDX1
    WRITE(2,301) NSPEC(I),TX1N
301 FORMAT(1H0,5X,I3,F15.5)
    IF(ABS(TX1N-X1).GT.D)GO TO 7
    X1N(I)=TX1N
    GO TO 6
  7 X1=TX1N
    GO TO 5
  2 I=0
    WRITE(2,300)
 16 I=I+1
    IF(45-I)12,19,19
 19 X2=0.37693
 15 FX2=0.58*(-COS(X2)-SIN(X2)/COS(X2)*SIN(X2)+1)+7.15*
   1(SIN(X2)/COS(X2)/X2-1)-FRDEF2(I)
    DYDX2=0.58*SIN(X2)/(COS(X2)*COS(X2))+7.15/(COS(X2)*
   1COS(X2)*X2*X2)*(X2-SIN(X2)*COS(X2))
    TX2N=X2-FX2/DYDX2
    WRITE(2,302) NSPEC(I),TX2N
302 FORMAT(1H0,5X,I3,F15.3)
    IF(ABS(TX2N-X2).GT.D)GO TO 17
    X2N(I)=TX2N
    GO TO 16
 17 X2=TX2N
    GO TO 15
 12 DO 100 I=1,N
    Y=X1N(I)
    XS=SIN(Y)
    XC=COS(Y)
    XT=XS/XC
    DEL=XT-Y
    G=1-XC-XT*XS
    ALPHA1(I)=(442.0*(FXDEF1(I)-(16.20*DEL/Y)-0.58*G))/(((
   1FXDEF1(I)-(16.20*DEL/Y))*Y/47.75*XT)+(0.34*(1./XC-1.)*
   2G))
100 CONTINUE
    DO 101 I=1,N
    Y=X2N(I)
    XS=SIN(Y)
    XC=COS(Y)
    XT=XS/XC
    DEL=XT-Y
    G=1-XC-XT*XS
    ALPHA2(I)=(1002.0*(FXDEF2(I)-(7.15*DEL/Y)-
   10.58*G))/(((FXDEF2(I)-(7.15*DEL/Y))*Y/47.75*XT)+
   2(0.15*(1./XC-1.)*G))
101 CONTINUE
    WRITE(2,75)
 75 FORMAT(1H1,14X,≠CLEAR DOUGLAS FIR STUD PROPRRTIES≠//
   110X,≠WALL      DEFLECTION   MOISTURE          MOE≠)
    DO 130 I=1,N
    WRITE(2,76) NSPEC(I),STUDDF(I),XMC(I),STMOE(I)
 76 FORMAT(1H0,9X,I3,6X,F7.3,9X,F3.1,9X,F7.0)
130 CONTINUE
    WRITE(2,77)
 77 FORMAT(1H0,≠STUDS WERE EDGE LOADED WITH 50 LB CENTER≠,
   1≠ LD. ON 92.5 IN. SPAN≠)
    WRITE(2,78)
```

```
 78 FORMAT(1H1,13X,≠EXTERIOR WALL SHEATHING PROPERTIES≠//
   116X,≠WALL          MOE       THICKNESS≠)
    DO 131 I=1,N
    XID=ID(I)
    X=XID/3.
    IX=ID(I)/3
    XX=IX
    DIF=X-XX
    IF(DIF.EQ.0.)GO TO 51
    IF(DIF.GT.0.5)GO TO 52
    IF(DIF.LT.0.5)GO TO 53
 51 WRITE(2,79) NSPEC(I),PLYMOE(I)
 79 FORMAT(1H0,17X,I3,7X,F7.0,7X,≠1/2¬ SP≠)
    GO TO 131
 52 WRITE(2,80) NSPEC(I),PLYMOE(I)
 80 FORMAT(1H0,17X,I3,7X,F7.0,7X,≠5/8¬ PLY≠)
    GO TO 131
 53 WRITE(2,81) NSPEC(I),PLYMOE(I)
 81 FORMAT(1H0,17X,I3,7X,F7.0,7X,≠3/8¬ PLY≠)
131 CONTINUE
    WRITE(2,82)
 82 FORMAT(1H1,13X,≠EFFECTIVE LENGTH KL/2 FOR RREE-END EQ.≠
   1/10X,≠WALL≠,11X,≠EFFECTIVE≠,9X,≠EFFECTIVE≠/23X,≠LENGTH≠
   2≠ AT 442≠,5X,≠LENGTH AT 1002≠)
    DO 132 I=1,N
    WRITE(2,83) NSPEC(I),X1N(I),X2N(I)
 83 FORMAT(1H0,10X,I3,12X,F7.5,11X,F7.5)
132 CONTINUE
    WRITE(2,84)
 84 FORMAT(1H1,12X,≠COEFFICIENT OF END RESTRAINT ¬ALPHA¬≠/
   1/10X,≠WALL≠,10X,≠COEF AT≠,11X,≠COEF AT≠/26X,≠442≠,14X,
   2≠1002≠)
    DO 133 I=1,N
    WRITE(2,85) NSPEC(I),ALPHA1(I),ALPHA2(I)
 85 FORMAT(1H0,10X,I3,7X,F11.0,7X,F11.0)
133 CONTINUE
    WRITE(2,86)
 86 FORMAT(1H1,7X,≠AVERAGE MID-SPAN DEFLECTION FOR EACH ≠
   1≠WALL TYPE≠//3X,≠WALL     AVERAGE FR  AVERAGE FR  AVE≠
   2≠RAGE FX  AVERAGE FX≠/3X,≠TYPE     DEF AT 442  DEF AT ≠
   3≠1002 DEF AT 442  DEF AT 1002≠)
    NTYPE=0
    DO 134 J=1,15
    NTYPE=NTYPE+1
    WRITE(2,87) NTYPE,AVFRDF1(J),AVFRDF2(J),AVFXDF1(J),
   1AVFXDF2(J)
 87 FORMAT(1H0,4X,I2,7X,F5.3,7X,F5.3,7X,F5.3,7X,F5.3)
134 CONTINUE
    DO 135 I=1,N
    WRITE(3,500) FRDEF1(I),FRDEF2(I),FXDEF1(I),FXDEF2(I),
   1ASLDEF(I),LDPL(I),DEFFL(I),FAIL(I),XMC(I),STMOE(I),
   2PLYMOE(I),ASLP3(I),BSLP3(I),CSLP3(I),DSLP3(I),X1N(I),
   3X2N(I),ALPHA1(I),ALPHA2(I)
500 FORMAT(1H0,5F5.3,1X,F4.0,1X,F5.3,1X,F4.0,1X,F3.1,1X,
   1F7.0,1X,F7.0,1X,4F8.0,2F7.5,2F8.0)
135 CONTINUE
    END
```

APPENDIX C

INPUT DATA

```
11 450 396 395 393 493  38 037 119 177 445  49 034 101 137
11 424  40 040  57 070 427  30 022  60 068 828 127 1336
11 498 477 477 15 088 3349 1446 83
12 391 366 381 369 445  52 048 123 160 417  48 037 114 144
12 419  27 017  95 125 418  50 038  94 118 998 151 1322
12 457 474 480 15 090 3425 1424 79
13 425 411 433 446 490  60 051 132 185 456  42 039 123 176
13 484  29 023 192 283 494  68 097 187 280 841 142 1252
13 415 433 458 15 092 3413 1428 98
21 393 371 387 360 448  55 047 121 153 409  30 020  60 061
21 447  55 057 265 350 406  48 041 265 341 841 122 1248
21 187 188 195 15 088 3378 1429 74
22 392 365 339 332 441  54 048 124 163 400  50 047 119 150
22 397  49 037 227 259 383  48 036 225 258 845 110 1476
22 169 167 169 15 090 3426 1439 90
23 434 386 386 392 500  67 078 126 176 429  60 063 120 164
23 421  58 051 105 140 417  49 051 128 167 840 124 1480
23 155 159 134 15 093 3382 1411 66
31 370 341 431 440 482  55 097 190 262 407  87 074 130 160
31 504 123 170 239 373 503  56 075 270 405 912 156 1354
31 203 201 205  4 089 3370 1444 85
32 448 374 446 457 486  57 088 178 279 440  47 034  87 079
32 492  40 044 164 239 487  58 079 144 2161100 197 1496
32 053 053 054  1 091 3254 1452 60
33 369 335 431 431 485 110 097 168 229 444 106 097 171 215
33 521  62 065 202 282 460  21 016  59 072 762 127 1316
33 059 057 057  1 093 3357 1425 60
41 450 399 414 394 495  34 035  72 105 446  61 067 120 165
41 461  51 062 191 272 436  32 021  89 103 746 117 1344
41 538 543 553  4 089 3335 1418 60
42 381 367 447 480 465  67 052 115 127 449  65 054 108 122
42 471  55 068 125 187 462  65 051 116 146 530 133 1204
42 474 480 538  4 091 3325 1406 62
43 464 429 458 459 523  41 040 118 178 474  30 017  66 083
43 488  21 015  51 066 485  20 017  60 084 788 134 1110
43 438 456 474  4 093 3370 1426 60
51 394 355 332 375 443  63 050 113 153 409  48 032 101 118
51 423  69 079 102 197 408  52 064 152 189 934 139 1401
51 572 572 571 15 089 3345 1460 72
52 391 340 373 378 448  65 093 117 157 399  60 043 120 146
52 422  54 068 187 244 409  18 011  60 060 770 114 1506
52 525 525 514 15 091 3360 1443 60
53 381 351 343 381 457  60 048  90 101 415  50 029  80 075
53 399  48 026  71 060 405  30 016  64 060 852 129 1026
53 504 508 517 15 093 3391 1424 60
61 455 398 432 442 527  46 036 153 232 452  25 016 109 131
61 498  87 110 183 289 511  73 079 187 255 822 146 1218
61 151 148 150  1 089 3360 1459 70
62 457 393 447 490 518  69 087 173 275 448  57 051 113 153
62 463  57 072          477  61 031          776 139  906
```

```
62 158 160 158  1 091 3396 1405 83
63 419 362 403 427 498  96 095 202 305 413  57 042 106 118
63 443  37 032 117 145 480  31 026 119 153 912 156 1130
63 179 177 179  1 093 3382 1456 75
71 455 413 416 403 510  59 075 160 243 440  49 060  49 060
71 432  60 078 113 158 473  54 065 275 376 885 134 1076
71 477 497 510  4 089 3423 1452 90
72 432 387 406 394 469  48 044  83 122 449  46 029 102 132
72 429  14 009  60 071 413  27 024  51 064 890 127 1340
72 449 405 431  4 091 3403 1398 80
73 465 402 425 424 517  66 088 168 279 460  62 065 183 262
73 468  47 041  77 096 542  13 008 285 4081156 177 1580
73 435 422 433  4 094 3305 1422 60
81 449 406 422 407 496  50 060 141 219 445  42 037  56 063
81 434  48 068          440  51 060 220 3031096 164 1624
81 538 536 537 15 090 3300 1425 60
82 468 411 419 423 515  62 082 121 191 446  50 055  65 080
82 493  30 032 287 409 456  28 028 255 3691116 182 1686
82 474 527 540 15 091 3430 1439 88
83 415 390 411 415 482  60 061 133 177 447  42 029  80 090
83 432  39 037          448  61 076 272 389 824 123 1254
83 482 492 513 15 094 3326 1412 65
91 452 403 383 395 512  80 106 152 252 443  59 060 123 174
91 441  57 067 260 349 466  25 025 269 361 948 141 1308
91 159 157 156  1 090 3331 1414 75
92 432 384 439 397 439  48 041 121 175 456  59 049 130 150
92 480  25 024 192 275 512  53 062 276 383 964 152 1446
92 322 320 324  2 092 3250 1450 60
93 504 420 441 412 548  46 063 169 249 457  23 019  63 071
93 485  29 025 234 351 512  60 074 282 393 816 127 1386
93 178 177 181  1 094 3327 1434 60
101 440 422 422 439 506  57 068 177 266 483  57 060 104 137
101 462  66 081 104 151 481  49 055 192 291 990 163 1272
101 481 475 484 15 090 3378 1381 67
102 443 424 425 408 472  43 053  43 053 461  49 051 109 163
102 448  60 067          435  53 051          788 119 1078
102 401 457 462 15 092 3357 1396 70
103 463 449 434 425 504  72 088 135 216 482  58 072 120 166
103 457  17 011  57 079 449  18 017  54 067 802 125 1048
103 423 419 442 15 094 3361 1437 62
111 411 379 344 343 473  51 047 129 172 429  78 076 114 155
111 375  60 037          375  15 008  49 045 978 136 1543
111 163 171 179 15 090 3359 1449 72
112 419 398 358 359 463  76 095 108 151 439  73 086  90 120
112 376  36 031  75 092 375  73 080 128 1571128 166 1442
112 170 169 164 15 092 3327 1425 80
113 421 396 330 381 467  75 090 128 177 450  53 039 110 145
113 409  36 033 136 175 439  51 055 256 354 907 132 1460
113 156 159 138 15 095 3359 1419 70
121 419 394 430 415 477  60 061 135 189 425  69 075 115 153
121 449  75 095 191 249 427  62 078          744 115 1388
```

```
121 052 052 051   1 090 3399 1415 76
122 445 422 432 444 507   70 075 108 180 466   56 048 105 155
122 459   49 060 118 172 467   24 026 183 276 696 110   916
122 055 055 056   1 092 3353 1411 78
123 428 415 450 438 520 108 131 159 246 475   46 043 101 134
123 487   48 059 171 257 497   53 068 250 379 834 140 1164
123 059 059 058   1 095 3374 1454 80
131 224 210 207 208 249   66 041 118 088 231   63 935
131 246   48 025 238 165 224 180 125           884   71 1560
131 494 468 472 15 090 3391 1427 89
132 222 220 136 192 243   56 042 155 111 250   56 040 158 111
132 222   61 029 189 129 238   97 054 270 183 960   76 1560
132 418 462 484 15 092 3405 1410 86
133 187 173 132 179 247   92 051 286 190 189   49 022 109 060
133 197   60 030 169 130 229   38 016 293 1841084   78 1820
133 426 418 422 15 095 3420 1408 60
141 164 170 151 157 191   53 015 239 142 184   62 029
141 175   59 020 195 103 177   51 023 260 138 916   54 2310
141 167 169 172 15 090 3415 1430 89
142 189 180 167 168 233   59 021 202 131 211   67 028 194 122
142 186   49 025 240 137 184 109 055 215 125 894   55 2330
142 170 166 162 15 092 3386 1461 80
143 175 162 143 145 202   44 019 189 108 202   72 033 253 141
143 161   52 017 197 095 159   63 026 172 0861422   77 2132
143 153 152 153 15 095 3388 1460 72
151 244 239 234 224 260   59 047 176 150 253   64 048 182 145
151 252   74 054 153 142 259 126 067 219 1731122   91 1968
151 052 051 052   1 090 3417 1438 93
152 234 224 224 225 265   45 025 213 171 244   56 034 180 138
152 253 105 073 231 243 242   83 057 194 1521685 149 1685
152 055 055 055   1 092 3403 1437 60
153 253 233 234 236 283   40 030 153 127 261   42 022 127 095
153 272   78 033 181 145 226 133 039 257 209 787   65 1951
153 060 058 059   1 095 3315 1417 60
```

APPENDIX D

Analyses of Variance

Analysis of Variance

Source of Variation	Degrees Freedom	Mean Square*	F Value: Calculated	F Value: Tabular 5% level	F Value: Tabular 1% level	Significant at 5% level	Significant at 1% level
1. Split-plot, four-factor:							
Type	4	7.23	12.14	2.69	4.02	-	-
Cover	2	11.00	18.47	3.32	5.39	-	-
Type x Cover	8	2.57	4.32	2.27	3.17	Yes	Yes
Error 1	30	0.60					
Load	1	13.51	135.10	4.17	7.56	Yes	Yes
Load x Type	4	0.21	1.62	2.69	4.02	No	No
Load x Cover	2	0.51	3.97	3.32	5.39	Yes	No
Load x Type x Cover	8	0.49	3.82	2.27	3.17	Yes	Yes
Error 2	30	0.13					
2. Three-factor within coverings:							
3/8-inch plywood							
Type	4	1.20	2.03	2.69	4.02	No	No
Error 1	30	0.60					
Load	1	1.87	14.48	4.17	7.56	Yes	Yes
Load x Type	4	0.19	1.49	2.69	4.02	No	No
Error 2	30	0.13					

Appendix D. Continued.

Source of Variation	Degrees Freedom	Mean Square*	F Value Calculated	F Value Tabular 5% level	F Value Tabular 1% level	Significant at 5% level	Significant at 1% level
5/8-inch plywood							
Type	4	3.68	6.19	2.69	4.02	Yes	Yes
Error 1	30	0.60					
Load	1	4.88	37.79	4.17	7.56	Yes	Yes
Load x Type	4	0.18	0.91	2.69	4.02	No	No
Error 2	30	0.13					
1/2-inch particleboard							
Type	4	7.48	12.57	2.69	4.02	-	-
Error 1	30	0.60					
Load	1	7.79	60.31	4.17	7.56	-	-
Load x Type	4	0.89	6.86	2.69	4.02	Yes	Yes
Error 2	30	0.13					
3. Three-factor within loads:							
442 lb. load							
Type	4	2.88	6.08	2.69	4.02	-	-
Cover	2	4.58	9.66	3.32	5.39	-	-
Type x Cover	8	1.15	2.43	2.27	3.17	Yes	No
Error	30	0.47					

Appendix D. Continued.

Source of Variation	Degrees Freedom	Mean Square*	F Value Calculated	F Value Tabular 5% level	F Value Tabular 1% level	Significant at 5% level	Significant at 1% level
1002 lb. load							
Type	4	4.55	18.21	2.69	4.02	-	-
Cover	2	6.93	27.73	3.32	5.39	-	-
Type x Cover	8	1.91	7.64	2.27	3.17	Yes	Yes
Error	30	0.25					
4. Two-factor within load & covering:							
3/8-inch plywood, 442 lb. load							
Type	4	1.10	1.83	2.69	4.02	No	No
Error 1	30	0.60					
3/8-inch plywood, 1002 lb. load							
Type	4	0.29	0.48	2.69	4.02	No	No
Error 1	30	0.60					
5/8-inch plywood, 442 lb. load							
Type	4	1.97	3.28	2.69	4.02	Yes	No
Error 1	30	0.60					
5/8-inch plywood, 1002 lb. load							
Type	4	1.83	3.05	2.69	4.02	Yes	No
Error 1	30	0.60					

Appendix D. Continued.

Source of Variation	Degrees Freedom	Mean Square*	F Value: Calculated	F Value: Tabular 5% level	F Value: Tabular 1% level	Significant at 5% level	Significant at 1% level
1/2-inch particleboard, 442 lb. load							
Type	4	2.12	3.53	2.69	4.02	Yes	No
Error 1	30	0.60					
1/2-inch particleboard, 1002 lb. load							
Type	4	6.25	10.41	2.69	4.02	Yes	Yes
Error 1	30	0.60					
5. Two-factor within load and type:							
Type I, 442 lb. load							
Cover	2	4.19	32.23	3.32	5.39	Yes	Yes
Error 2	30	0.13					
Type I, 1002 lb. load							
Cover	2	11.27	86.69	3.32	5.39	Yes	Yes
Error 2	30	0.13					
Type II, 442 lb. load							
Cover	2	0.89	6.85	3.32	5.39	Yes	Yes
Error 2	30	0.13					

Appendix D. Continued.

Source of Variation	Degrees Freedom	Mean Square*	F Value Calculated	F Value Tabular 5% level	F Value Tabular 1% level	Significant at 5% level	Significant at 1% level
Type II, 1002 lb. load							
Cover	2	1.02	7.85	3.32	5.39	Yes	Yes
Error 2	30	0.13					
Type III, 442 lb. load							
Cover	2	0.019	0.15	3.32	5.39	No	No
Error 2	30	0.13					
Type III, 1002 lb. load							
Cover	2	0.053	0.41	3.32	5.39	No	No
Error 2	30	0.13					
Type IV, 442 lb. load							
Cover	2	0.94	7.23	3.32	5.39	Yes	Yes
Error 2	30	0.13					
Type IV, 1002 lb. load							
Cover	2	0.86	6.62	3.32	5.39	Yes	Yes
Error 2	30	0.13					

Appendix D. Continued.

Source of Variation	Degrees Freedom	Mean Square*	F Value: Calculated	F Value: Tabular 5% level	F Value: Tabular 1% level	Significant at 5% level	Significant at 1% level
Type V, 442 lb. load							
Cover	2	3.16	24.31	3.32	5.39	Yes	Yes
Error 2	30	0.13					
Type V, 1002 lb. load							
Cover	2	1.36	10.46	3.32	5.39	Yes	Yes
Error 2	30	0.13					

*All values x 10^9