AN ABSTRACT OF THE THESIS OF

Richard W.B. Forrest for the degree of Master of Science in Civil Engineering presented on June 9, 2005.
Title: Analysis of Conventionally Reinforced Concrete Bridge Girders for Low-Cycle Fatigue in Shear.

Abstract approved:
Redacted for privacy

Christopher C. Higgins

Increasing load magnitudes and loss of reinforcing steel cross-sectional area from corrosion creates the potential for low-cycle fatigue (LCF) in conventionally reinforced concrete (CRC) bridge girders lightly reinforced for shear. LCF of reinforcing steel may be of particular concern. Little data are available for LCF of reinforcing steel without stress reversals. LCF tests were performed on 40 specimens of Grade 276 (40 ksi) #13 (#4) reinforcing steel, a widely used bar size for shear reinforcing in older CRC bridges. Specimens were tested in air and embedded in concrete. An S-N curve was created for the LCF region and the observed fatigue life of embedded samples was comparable to those tested in air.

Six (6) full scale girders representative of 1950s vintage reinforced concrete deck girder (RCDG) bridges were tested for LCF. It was determined that the shear

reinforcement controls LCF in shear dominated sections. An analysis methodology for LCF in girders is developed, as is a methodology for obtaining post-yield stresses in shear reinforcement. An equation for obtaining equivalent shear reinforcement spacing after stirrup fracture is developed.

Analysis of Conventionally Reinforced Concrete Bridge Girders for Low-Cycle Fatigue in Shear

by
Richard W.B. Forrest

A THESIS

submitted to

Oregon State University

in partial fulfillment of
the requirements for the
degree of

Master of Science

Presented June 9, 2005
Commencement June 2006

Master of Science thesis of Richard W.B. Forrest presented on June 9, 2005.

APPROVED:

Redacted for privacy

Major Professor, representing Civil Engineering

Redacted for privacy

Head of the Department of Civil, Construction and Environmental Engineering

Redacted for privacy

Dean of the Graduate School

I understand that my thesis will become part of the permanent collection of Oregon State University libraries. My signature below authorizes release of my thesis to any reader upon request.

Redacted for privacy

Richard W.B. Forrest, Author

ACKNOWLEDGMENTS

I would like to thank my major professor, Dr. Christopher Higgins, who provided me with a very positive graduate school experience. My family was incredibly supportive and helped me at every opportunity. My friends and co-workers at the Oregon State University Structural Engineering Laboratory assisted me with my experiments and I would not have been able to complete my thesis without them. Lastly, I'd like to give honor to my savior, Jesus, the Christ. He supported me daily and I couldn't have functioned without His grace.

CONTRIBUTION OF AUTHORS

Dr. Christopher Higgins assisted with testing, data collection, and data interpretation. He also assisted with the design and writing of Chapters 2 and 3.

TABLE OF CONTENTS

TABLE OF CONTENTS (Continued)

LIST OF FIGURES

LIST OF FIGURES (Continued)

LIST OF TABLES

General Introduction

A large number of vintage conventionally reinforced concrete (CRC) bridges are lightly reinforced for shear as they contain smaller sized or more widely spaced stirrups than would be permissible by modern design specifications. Inspections have identified diagonal cracking of the girders and bents and have raised concerns over the adequacy and remaining life of diagonally cracked reinforced concrete deck-girder bridges (RCDG). One area of interest is the effect of repeated service-level overloads on these bridges resulting in low-cycle fatigue (LCF)

The distinction between low-cycle fatigue and high-cycle fatigue (HCF) is controversial. Several definitions have been proposed, but low-cycle fatigue can generally be defined as fatigue that results in failure in less than 10,000 cycles and contains inelastic deformations (Dowling 1999). It is possible to have a coincidence of modern heavy permit vehicles sufficient to cause yielding of the stirrups in vintage CRC bridges (Higgins 2004). Reinforcing steel in these bridge members is not subjected to significant stress reversals under vehicular loads. In addition, environmental effects, such as corrosion, may cause a reduction in the cross-sectional area of the reinforcing steel. This reduction may cause the steel to yield under service level loads. Increased magnitude and volume of vehicular

loads combined with possible reinforcement corrosion in the future are likely to increase the potential for low-cycle fatigue damage to lightly reinforced bridge superstructure components.

Low-Cycle Fatigue of Reinforcing Steel Without Stress Reversals

Richard W.B. Forrest and Christopher Higgins, PhD, PE

American Concrete Institute Materials Journal
38800 Country Club Drive
Farmington Hills, MI 48331
To be published

Low-Cycle Fatigue of Reinforcing Steel Without Stress Reversals

Richard W.B. Forrest[1] and Christopher Higgins, PhD, PE[2]

[1] Design Engineer, CH2M Hill, Corvallis, OR 97330 (Former Graduate Research Assistant, Dept. of Civil Engineering, Oregon State University, Corvallis, OR 97331)

[2] Associate Professor, Dept. of Civil Engineering, Oregon State University, Corvallis, OR 97331

Keywords: Reinforcing Steel, Low-Cycle Fatigue, Bridges

Abstract

Increasing load magnitudes and loss of reinforcing steel cross-sectional area from corrosion creates the potential for low-cycle fatigue (LCF) of structural members under repeated overloads. LCF of reinforcing steel may be of particular concern for conventionally reinforced concrete (CRC) bridge girders lightly reinforced for shear. Little data are available for LCF of reinforcing steel without stress reversals. LCF tests were performed on 40 specimens of Grade 276 (40 ksi) #13 (#4) reinforcing steel, a widely used bar size for shear reinforcing in older CRC bridges. Specimens were tested in air and embedded in concrete. An S-N curve was created for the LCF region and the observed fatigue life of embedded samples was comparable to those tested in air.

Introduction

The distinction between low-cycle fatigue (LCF) and high-cycle fatigue (HCF) is controversial. Several definitions have been proposed, but low-cycle fatigue can generally be defined as fatigue that results in failure in less than 10,000 cycles and contains inelastic deformations (Dowling 1999). Low-cycle fatigue without stress reversal may be of significance for practical structures. Older structures, such as conventionally reinforced concrete bridges, may be very lightly reinforced for shear and it is possible to have a coincidence of modern heavy permit vehicles sufficient to cause yielding of the stirrups (Higgins, 2004). Reinforcing steel in these bridge members is not subjected significant stress reversals under vehicular loads. Additionally, bridges subjected to environmental damage, such as corrosion, may contain rebar with significantly reduced cross-sectional areas. These reduced areas may be subjected to stresses above the yield limit under service-level loads. Increased magnitude and volume of vehicular loads combined with the likelihood of reinforcement corrosion in the future will increase the potential for low-cycle fatigue damage to lightly reinforced bridge superstructure components.

Background

Previous research on low-cycle fatigue of reinforcing steel without reversals is very limited. Much of the prior work on fatigue of reinforcing steel is focused on

high-cycle fatigue, low-cycle fatigue under stress reversal, and bond fatigue. Pfister and Hogenstad (1964), Burton (1965), Hanson *et. al.* (1968), and Bannister (1969) conducted research on the high-cycle fatigue of reinforcing steel but did not include samples in the LCF region. Helgason *et. al.* (1976), conducted extensive research on the high-cycle fatigue of reinforcing bars and included only one specimen in the LCF region. Pasko's (1973) research also concentrated on the high-cycle fatigue region and included only two specimens in the LCF region. HCF research on reinforcing steel indicated cracks initiated at the base of the transverse lugs. Stress range was the primary factor affecting the fatigue life of rebar although mean stress, bar diameter, grade of steel, and deformation pattern also have some influence.

Detailed studies on low-cycle fatigue of reinforcing steel were conducted by Mander *et. al.* (1994) and Brown and Kunnath (2004), but this work focused primarily on strain reversals for seismic applications. High-cycle fatigue in beams under shear has been researched by Hawkins (1974), Ueda and Okamura (1981, 1983), Teng *et. al.* (1998), and Kwak and Park (2001). Manfredi and Pecce (1996) studied LCF on concrete beams under bending. Low-cycle fatigue in RC members has also been studied by Chung *et. al.* (1989), Thomson *et. al.* (1998), El-Bahy *et. al.* (1999), and Erberik and Sucuoğlu (2004) who concentrated on low-cycle fatigue as it applies to seismic loading.

Another factor affecting the behavior of reinforcing steel in fatigue is the interaction of the bar with the surrounding concrete. Rehm and Eligehausen (1979) and Balázs (1998) conducted research on bond behavior under repeated loading. Results showed that under fatigue loading, bond slip initially increases in a non-linear fashion then becomes gradually linear over the majority of the fatigue life, and then prior to failure, again becomes non-linear. These experiments were performed for reinforcing bars cycled in the elastic range.

Research Significance

Increasing vehicle load volume and magnitude as well as environmental damage creates the possibility of low-cycle fatigue without stress reversals in lightly-reinforced concrete members. This area has not previously been investigated. A further understanding of LCF behavior of reinforcement without stress reversal is required to predict LCF behavior of CRC bridge elements under repeated overloads.

Research Approach

Characterization of the LCF region for reinforcing steel without stress reversals was performed by conducting tests of rebar samples both in air and embedded in concrete. Initial tensile tests were performed to characterize the monotonic constitutive behavior of the rebar used in the subsequent LCF test program. Reinforcing bar size #13 (#4) with a nominal yield strength of 276 MPa (40 ksi)

was studied. The samples were taken from a single heat of steel manufactured to ASTM A615-00. The chemical composition of the heat was C: 0.32, Mn: 0.63, P: 0.008, S: 0.027, Si: 0.23, V: 0.002, and Ce: 0.45. The Grade 300 (40) #13 (#4) reinforcing bar size represents a typical stirrup size used widely for conventionally reinforced deck-girder bridges designed from the 1940's to 1960's. The grade nominally corresponds to the ASTM specified Intermediate Grade steel used at the time.

Previous research (Helgason *et al.* 1976 and Hanson 1968) noted that the ratio of the base of the lug radius to the height of the lug, r/h ratio, was an important factor for the fatigue life of the reinforcement. To assess the r/h ratio, samples were taken from 6 different 6.1 m (20 ft) lengths of rebar. Samples were machined in half longitudinally. The machined samples were then placed on a flatbed scanner and an image of the cross section was obtained as shown in Fig. 2.1. The base of lug radius, height of lug, distance between lugs, and lug width were measured using a commercially available computer-aided drafting program. Reference grids were included in the original scan to ensure no optical distortion was included in the image. The average measured deformation pattern dimensions follow: bar diameter = 12.2 mm (0.48 in.), height of deformation = .67 mm (0.026 in.), lug spacing = 5.1 mm (0.20 in.), lug width = 3.6 mm (0.128 in.) and the r/h ratio = 0.39. Review of past ASTM deformation and material requirements for reinforcing steel, ASTM A305-50T (1950) and ASTM A15-50T (1950), showed

that the requirements remain virtually unchanged to the modern ASTM A615-00 specification. This indicates that vintage reinforcing steel may tend to have similar stress concentrations associated with the deformation patterns and crack propagation as those for modern reinforcing steel of similar grades, although additional work with vintage reinforcing bars will be required to fully justify this tendency.

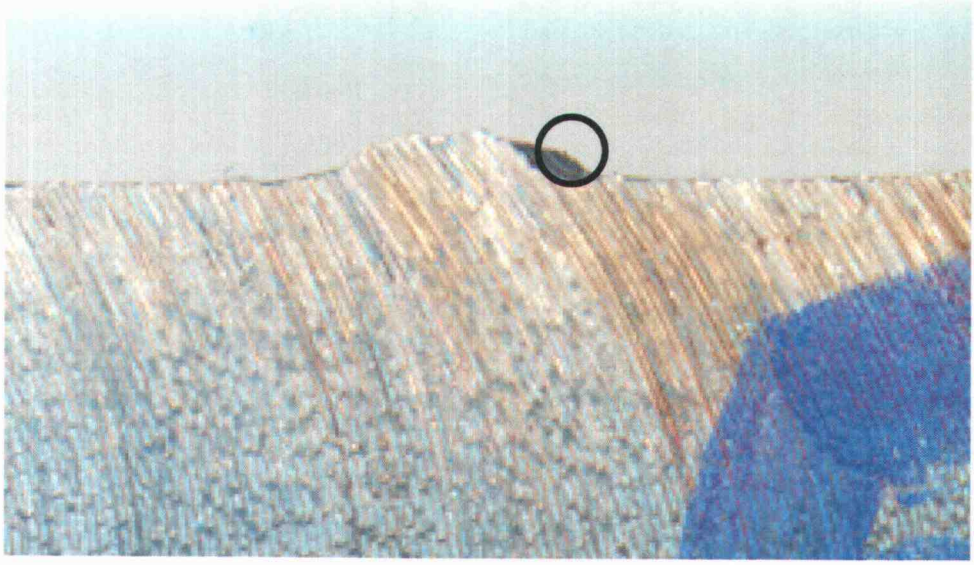

Fig. 2.1. Example of reinforcement cross section with a circle representing the base of lug radius.

To characterize the monotonic material response, 10 specimens were tested monotonically in a 490 kN (110 kip) capacity universal testing machine. Reinforcing bar samples were cut into 84 cm (33 in.) long specimens to obtain the same overall gage length as that used for the subsequent fatigue tests. Strain was measured using a 51 mm (2 in.) gage length extensometer. Elongation was also measured by marking a 51 mm (2 in.) gage length prior to testing and measuring

the elongation after testing with a digital micrometer. Tests were performed in displacement control using a closed-loop servo-hydraulic system with a loading rate of 0.18 mm (0.005 in.) per minute. The stress-strain responses for all specimens are shown in Fig.2.2. The yield stress, Young's Modulus, ultimate stress, and the strain at ultimate stress for each sample are shown in Table 1. The yield stress used in the subsequent testing program was taken as the average stress on the yield plateau. The yield stress and yield strain reported in Table 1 were taken at the initial sign of inelastic behavior.

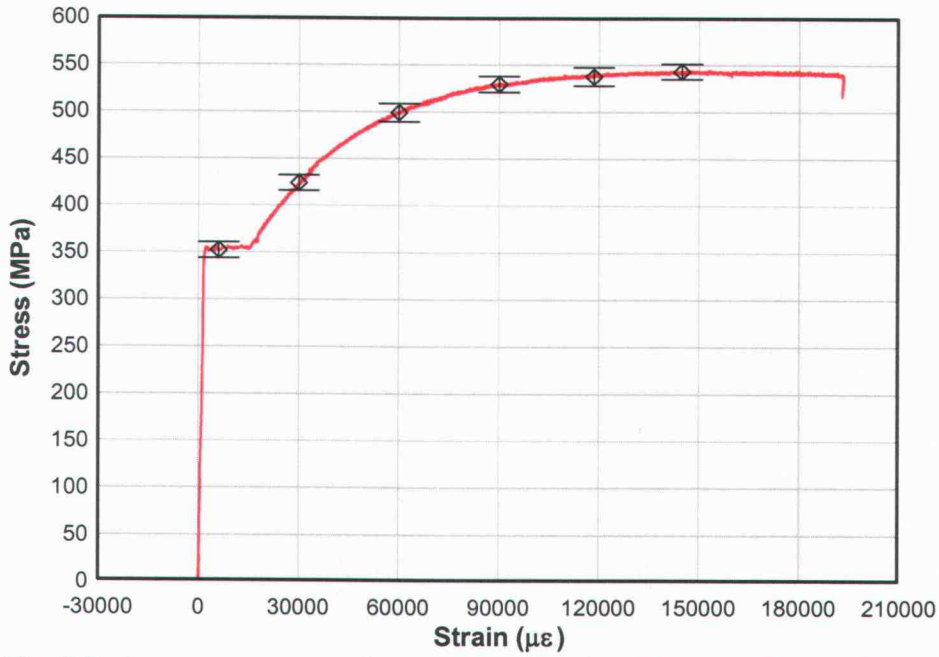

Fig. 2.2. Average stress-strain response showing 5% and 95% confidence fractiles for #13 reinforcement specimens tested under monotonic tension.

Table 2.1. Monotonic properties of tested specimens

Specimen	Initial Yield Stress MPa	Yield Stress Plateau MPa	Yield Strain $\mu\epsilon$	Young's Modulus MPa	Point at Which Strain Hardening Begins $\mu\epsilon$	Ultimate Stress MPa	Ultimate Strain $\mu\epsilon$
1	359.8	357.2	1686	212	17572	542	156167
2	346.8	350.3	1811	193	16936	539.3	162167
3	348.9	346.8	1795	193	15554	544.3	165972
4	351.3	349.6	1843	190	16087	545.5	175513
5	365.1	360.1	1965	183	15326	556.8	159551
6	357.9	351.7	1770	199	15137	549.2	148630
7	356.4	358	1669	214	15465	548.5	158060
8	356.7	353.4	1732	204	16422	543.3	151372
9	357.8	355.1	1793	198	17043	544.9	151985
10	348.4	352.4	1664	212	14150	546.8	160159
Mean	354.9	353.5	1773	200	15969	546.1	158958

Cyclic tests were conducted using a 400 kN (90 kip) capacity hollow-core ram actuated using a 57 L (15 Gal.) per minute hydraulic servo-valve. Overall specimen length was the same as that used in the previous monotonic testing and specimens were also marked with a 51 mm (2 in.) gage length prior to testing. Re-usable prestressing strand chucks were used to grip the specimen ends and these were anchored against 25 mm (1 in.) steel plates. The overall length of steel between loading points was 49 cm (19.25 in.). Load was measured with a 222 kN (50 kip) capacity hollow-core load cell. The test setup is shown schematically in Fig. 2.3. Specimens were carefully aligned in the test setup to minimize bending

induced stresses. Overall displacement of the bar was measured with a 25.4 cm (10 in.) capacity string potentiometer. Tests were conducted in load control using a closed-loop servo-hydraulic system. Load was applied to the specimen at a rate of 10 kN (2.25 kips) per minute. On the initial loading cycle, the specimen was held at the maximum load until creep behavior was no longer observed. The specimen was then subjected to cyclic loading at a rate of 1 Hz. A minimum stress of 17.2 MPa (2.5 ksi) was maintained in order to prevent shifting of the specimen and anchorage attachments within the setup. Four different stress ranges were used to characterize the LCF region. These ranges were 503MPa (73 ksi), 486 (70.5 ksi), 469 MPa (68 ksi), and 462 MPa (67 ksi), corresponding to 91.5% , 89.0%, 85.9%, and 84.6% of the average monotonic ultimate stress, respectively. Stresses below this range would result in higher numbers of cycles, considered beyond the LCF threshold for this study. Cyclic loading was applied to each specimen until fracture. Cycles to failure and elongation within the 51 mm (2 in.) marked gage length were recorded for each specimen. No specimen failure was observed at the gage length markings.

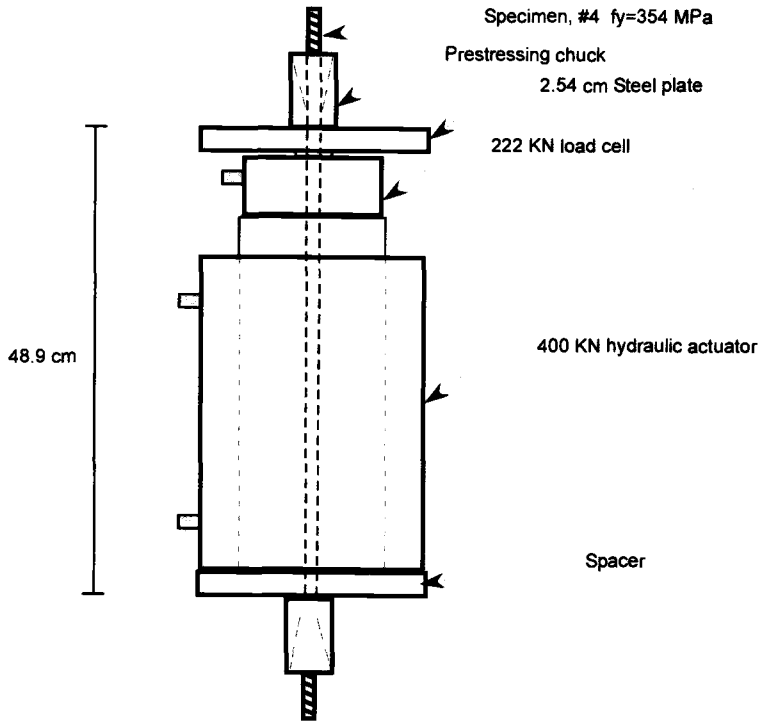

Fig. 2.3. Testing apparatus for in-air cyclic loading of reinforcing steel.

Ten specimens were tested at each stress range. All of the specimens exhibited fractures originating from cracks that initiated at the base of the transverse lugs. The fracture was along the plane of the transverse lugs except in two specimens which fractured near anchorage connections. Transverse lugs adjacent to the fracture exhibited visible cracks that had not fractured. These cracks were further inspected by bending the fatigued rebar until it fractured, revealing the cracked cross section. Examination of the cracked cross section showed that the fatigue cracks had progressed approximately halfway across diameter of the rebar without fracture.

The resulting data for stress range and number of cycles to failure were fitted to a lognormal distribution. The lognormal distribution was tested for goodness of fit using the inverse CDF method (Rosowsky, 1997) as shown in Fig. 2.4. The resulting cumulative distribution functions are shown in Figs. 5a-d. The data were used to populate a stress-range vs number of cycles to failure curve (S-N curve) as shown in Fig. 2.6. Lines representing the mean cycles to failure as well as lines representing the 5% and 95% fractiles for cycles to failure are shown in the figure. Linear regression of the data provided the following S-N relationships:

$$\left.\begin{aligned} \bar{S} &= 625.3 - 42.8\log(N) && [1] \\ S_{5\%} &= 605.4 - 40.1\log(N) && [2] \\ S_{95\%} &= 645.8 - 46.1\log(N) && [3] \end{aligned}\right\}$$

where $\bar{S}$, $S_{5\%}$, and $S_{95\%}$ are the mean and 5% and 95% fractile stress ranges, respectively (MPa), and N is the number of cycles to failure. An almost linear relationship was observed between the number of cycles at failure and the average strain (over the entire specimen length) just before failure, as seen in Fig. 2.7. The values of average strain at failure were above the strain at ultimate stress for the monotonic specimens when the number of cycles to failure was below 6500. For few very large overloads, the LCF strain amplitude at failure in the reinforcing bar would tend to be larger than that predicted from monotonic results.

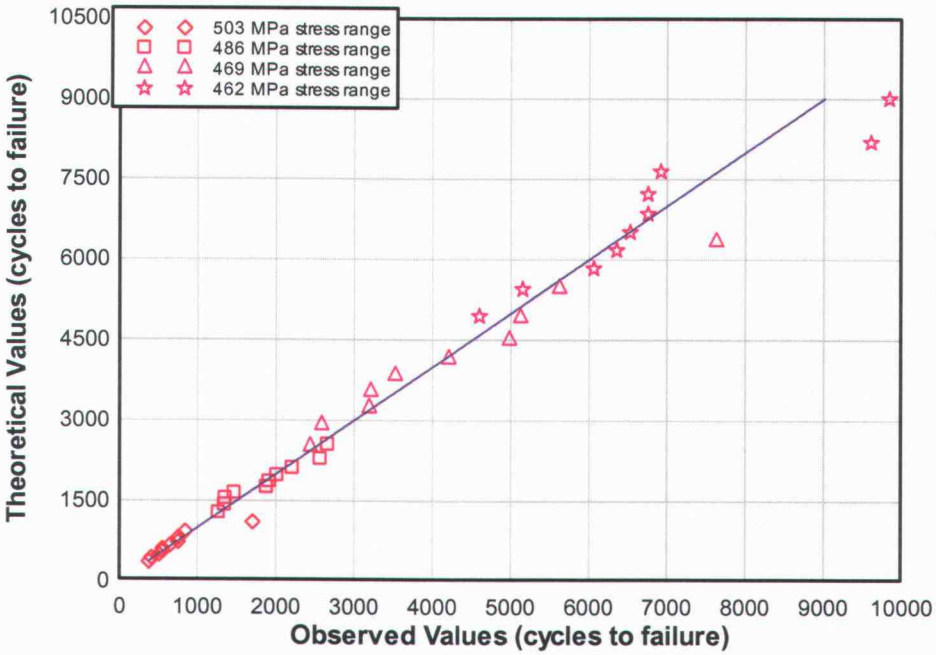

Fig. 2.4. Inverse CDF for lognormal distribution of LCF samples.

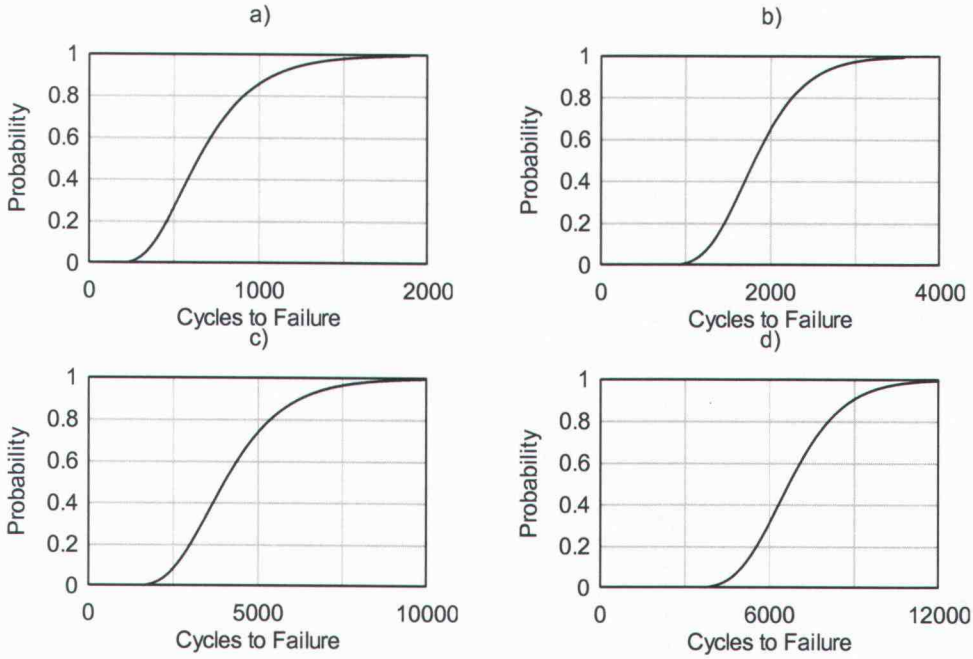

Fig. 2.5. Cumulative density functions for the following stress ranges: a) 503 MPa, b) 486 MPa, c) 469 MPa, d) 462 MPa.

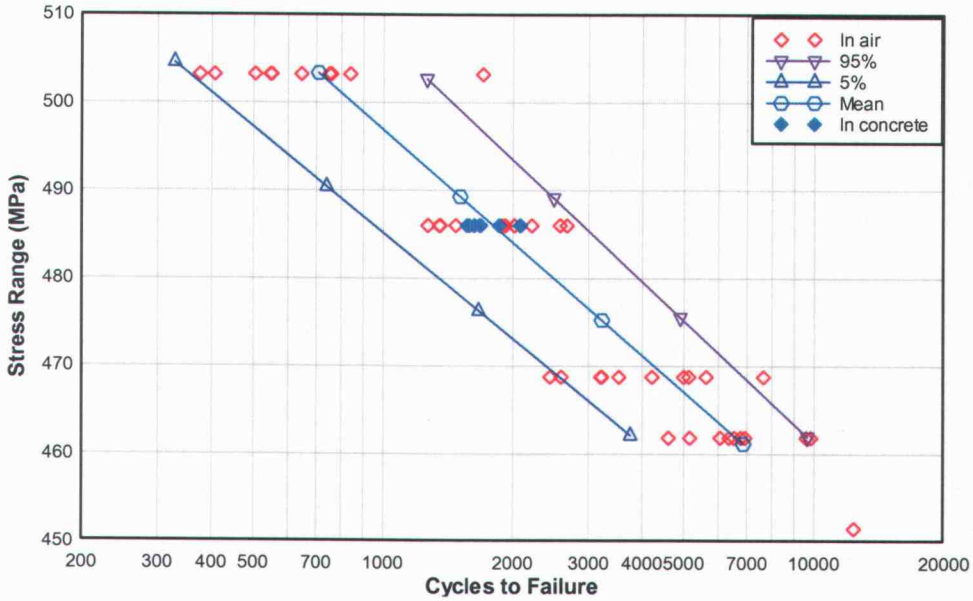

Fig. 2.6. LCF S-N curve for Grade 300 #13 reinforcing bar without stress reversals.

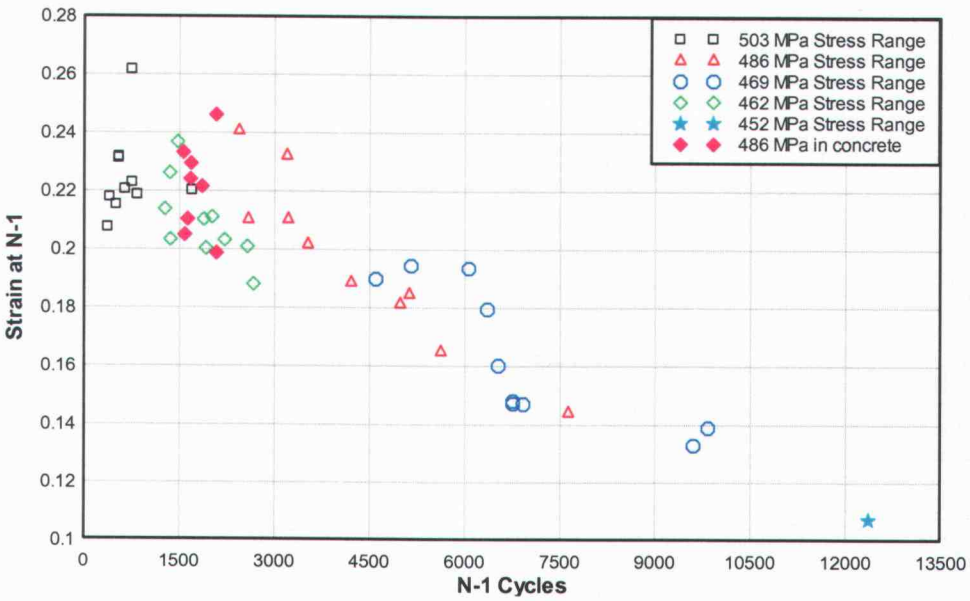

Fig. 2.7. Average strain prior to failure and the number of cycles to failure.

The effect of concrete bond on LCF of small diameter reinforcing bars under cyclic loading without reversals was also investigated. The #13 (#4) reinforcing bars were cast in 35.6 cm x 533.4 cm x 1498.6 cm (14 in. x 21 in. x 59 in.) concrete blocks. The concrete block was designed to represent the top half of the stem of a full-size conventionally reinforced concrete girder. The bars were anchored around a #36 (#11 bar), which represents the flexural steel in the deck, with a 90° hook detail. To reflect the hook length used in 1950's reinforced concrete deck girder (RCDG) bridges, the tail length was 11.4 cm (4.5 in.) instead of using the current detailing requirement (ACI 318-05). The top plane of the block with the stirrup leg protruding represents a diagonal crack interface at mid-height of the stem. To test the reinforcing bars embedded in the block, the loading apparatus was placed over the protruding stirrup leg and tested in the same manner as that for the in-air specimens. The testing setup is shown schematically in Fig. 2.8.

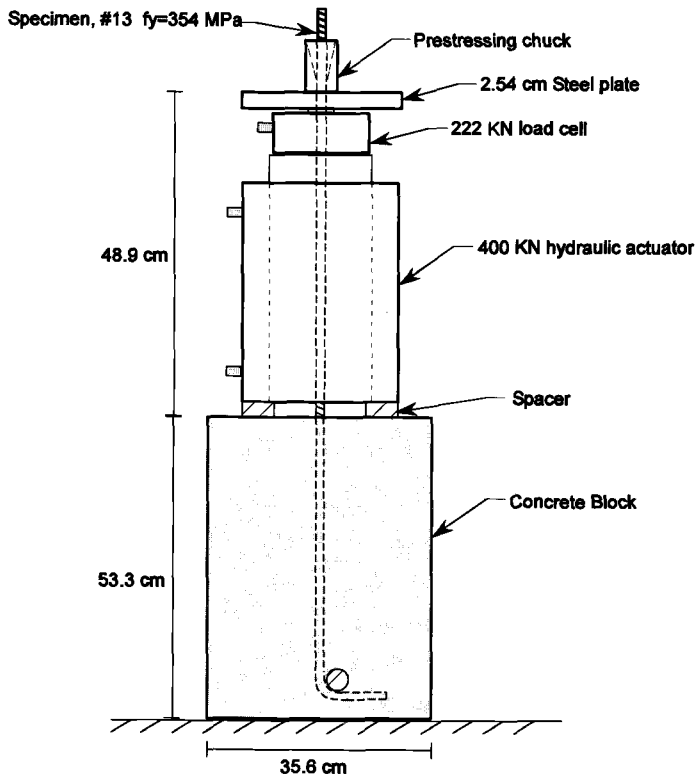

Fig. 2.8. Testing apparatus for in-concrete cyclic loading of reinforcing steel.

Results of fatigue tests for the stirrups embedded in concrete are also shown in Fig. 2.6, where the embedded specimens fall within the statistical distribution of the in-air specimens at the same stress range. The observed fracture was again along the plane of the transverse lugs similar to the in-air specimens. All of the embedded specimens exhibited fractures that occurred above the concrete-air interface. As the reinforcing bar is repeatedly loaded inelastically without reversals, some concrete bond degradation was observed. Specimens exhibited small spall cones around the stirrup leg and increases in overall specimen

deformation at failure. The bond deterioration resulted in a progressively longer gage length with a larger portion of the bar subjected to inelastic stress. However, because the unembedded portion of the sample was subjected to high stress for more cycles than the portion of the reinforcement initially fully embedded, failure occurred in the in-air portion of the specimens. If the rebar sample had contained a more significant flaw below the concrete-air interface, fracture could occur at that location as debonding progresses. This may occur even if the section is subjected to a lower stress (due to bond stresses) or at fewer cycles or both. The in-air performance provides a lower bound for the fatigue performance of tensile loaded samples without reversals because all defects along the gage length of the sample are subjected to the same stress levels for the same number of cycles.

The fracture surfaces of selected samples were inspected using a scanning electron microscope. Digital images were produced of the fracture surfaces at magnifications ranging from 7.1X to 250X. The fractured surfaces were compared to fractographs in the American Society of Metals Handbook (ASM 1987). It was difficult to ascertain the fracture origin from the SEM pictures. Beach marks were not readily visible nor was there a clear distinction between the fatigue crack and the fast-fracture surface. This is a departure from high-cycle fatigue fracture in reinforcement where the crack initiation, crack growth, and the fast fracture surface are more clearly discernable.

Conclusions

LCF tests without stress reversals for #13 (#4) ASTM Grade 615-00 (f_y= 276 MPa) reinforcing bars were conducted. The specimens were tested both in air and embedded in concrete. Results were used to develop an S-N curve for LCF behavior without stress reversals. Based on the reported laboratory results, the following conclusions are presented:

- A lognormal distribution provided a reasonable fit for test results of LCF fatigue without reversal on the reinforcing bars.
- A series of equations were developed to describe the LCF relationship between stress range and number of cycles to failure for mean and the 5% and 95% fractiles.
- Average specimen strain prior to failure became smaller as the number of cycles increased (corresponding to smaller inelastic stress ranges). Average specimen strain just before failure was larger than the strain at ultimate stress for monotonic specimens when the number of cycles was less than 6500.
- LCF test results of specimens in concrete were similar to those conducted in air.
- Fracture from LCF of reinforcing steel without stress reversals originated from cracks initiated at the base of the transverse lugs.
- Cracks propagated across approximately 50% of the reinforcing bar area without fracture.

- It was difficult to differentiate the crack initiation site, crack propagation, or fast fracture surface of LCF fracture surfaces with inspection by SEM.

Additional research is underway at Oregon State University to characterize the LCF behavior of reinforcing steel without stress reversals in vintage steel obtained from 1950's era RCDG bridges and additional samples are being sought by the authors.

Acknowledgements

Support for this project was provided by the Federal Highway Administration and the Oregon Department of Transportation. The authors wish to thank: Professor Timothy Kennedy, and Professor Jamie Kruzic, of Oregon State University's Department of Mechanical Engineering for helpful suggestions on stress and fatigue analysis of the specimens and Mr. Grahme Williams for sample preparation and testing assistance.

References

1. ASTM Specification A15-50T, "Tentative Specifications for Billet Steel Bars for Concrete Reinforcement," ASTM International, Philadelphia, PA, 1950, pp. 207-210
2. ASTM Specification A305-50, "Tentative Specifications for Minimum Requirements for the Deformations of Deformed Steel Bars for Concrete Reinforcement," ASTM International, Philadelphia, PA, 1950, pp. 218-220
3. ASTM Specification A615/A615M-00, "Standard Specification for Deformed and Plain Billet-Steel Bars for Concrete Reinforcement," West Conshohocken, PA, pp. 296-300
4. ACI Committee 318 (2005), "Building Code Requirements for Structural Concrete," American Concrete Institute, Farmington Hills, MI, 2005, pp. 430
5. Balázs, G.L, "Bond Under Repeated Loading," SP 180-6: Bond and Development of Reinforcement, A Tribute to Dr. Peter Gergely, Leon, R. (Editor), American Concrete Institute, Farmington Hills, MI, 1998, pp. 125-143
6. Bannantine, J.A.; Comer, J.J.; Handrock, J.L. "Fundamentals of Metal Fatigue Analysis," Prentice Hall, Upper Saddle River, NJ., 1990, 273pp.
7. Bannister, J.L., "The Behaviour of Reinforcing Bars under Fluctuating Stress," *Concrete,* V. 3, No. 10, October 1969, pp. 405-409

8. Brown, J.; Kunnath, S.K., "Low-Cycle Fatigue Failure of Reinforcing Steel Bars" *ACI Materials Journal*, V.101, No. 6, November-December, 2004, pp. 457-466

9. Burton, K.T., "Fatigue Tests of Reinforcing Bars," *Journal of the PCE Research and Development Laboratories*, V.7, No. 3, September, 1965, pp. 13-23

10. Dodd, L.L.; Restrepo-Posada, J.I., "Model for Predicting Cyclic Behavior of Reinforcing Steel," *Journal of Structural Engineering*, ASCE, V. 121, No. 3, 1995, pp. 433-445

11. Dowling, N., "Mechanical Behavior of Materials: Engineering Methods for Deformation, Fracture, and Fatigue (2nd Edition)," Prentice Hall, Upper Saddle River, NJ., 1990, 830pp.

12. El-Bahy, A; Kunnath, S.K.; Stone, W.C., Taylor, A.W., "Cumulative Seismic Damage of Circular Bridge Columns: Benchmark and Low-Cycle Fatigue Tests," *ACI Structural Journal*, V96, No. 4, July/August, 1999, pp. 633-641

13. El-Bahy, A; Kunnath, S.K.; Stone, W.C., Taylor, A.W., "Cumulative Seismic Damage of Circular Bridge Columns: Benchmark and Low-Cycle Fatigue Tests," *ACI Structural Journal*, V96, No. 5, September/October, 1999, pp. 711-719

14. Erberik, A.; Sucuoğlu, H., "Seismic Energy Dissipation in Deteriorating Systems Through Low-Cycle Fatigue," *Earthquake Engineering and Structural Dynamics*, V. 33, No. 1, November, 2003, pp. 49-67

15. Hanson, J.M.; Burton, K.T.; and Hognestad, E., "Fatigue Tests of Reinforcing Bars- Effect of Deformation Pattern," *Jornal of the PCA Research and Development Laboratories*, V. 10, No. 3, September, 1968, pp. 2-13

16. Hawkins, N.M., "Fatigue Characteristics in Bond and Shear of Reinforced Concrete Beams," SP-41: Abeles Symposium – Fatigue of Concrete, American concrete Institute, Detroit, Michigan, pp. 203-236

17. Helgason, T.; Hanson, J.M.; Somes, N.F., Corley, G.; and Hognestad, E., "Fatigue Strength of High-Yield Reinforcing Bars," *NCHRP Report 164*, Transportation Research Board, Washington D.C., 1976, 90 pp.

18. Higgins, C; et. al. "Research Project SPR 350 SR 500-91: Assessment Methodology for Diagonally Cracked Reinforced Concrete Deck Girders," Oregon Department of Transportation, Salem, OR, October, 2004

19. Jhamb, I.C.; MacGregor, J.G., "Structural Report 39: Fatigue of Reinforcing Bars," Department of Civil Engineering, The University of Alberta, Edmonton, AB, February, 1972, pp. 227.

20. Koh, S.K.; Stephens, R.I., "Mean Stress Effects on Low Cycle Fatigue for a High Strength Steel," *Fatigue and Fracture of Engineering Materials and Structures*, V. 14, No. 4, 1991, pp. 413-428

21. Kwak, K.H., Park, J.G., "Shear-Fatigue Behavior of High Strength Concrete Under Repeated Loading," *Structural Engineering and Mechanics*, V. 11, No. 3, March, 2001, pp. 301-314

22. Mander, J.B.; Panthaki, F.D.; and Dasalanti, A., "Low-cycle fatigue Behavior of Reinforcing Steel," *Journal of Materials in Civil Engineering*, ASCE, V. 6, No. 4, 1994, pp. 453-467

23. Manfredi, G.; Pecce, M., "Low Cycle Fatigue of RC Beams in NSC and HSC," *Engineering Structures*, V. 19, No. 3, March, 1997, pp. 217-223

24. Mills, K.ed., "ASM Handbook, Formerly Ninth Edition, Metals Handbook, Volume 12: Fractography," ASM International, Materials Park, Ohio, 1987, pp. 517

25. Pasko, T.J., "Fatigue of Welded Reinforcing Steel," *ACI Journal*, V. 70, No. 11, November, 1973, pp. 757-758

26. Pfister, J.F.; Hognestad, E., "High Strength Bars as Concrete Reinforcement," *Journal of the PCA Research and Development Laboratories*, V. 6, No. 1, January, 1964, pp. 65-84

27. Rehm, G; Eligehausen, R., "Bond of Ribbed Bars under High Cycle Repeated Loads," *ACI Journal*, V. 76, February, 1979, pp.297-309

28. Rosowsky, D., "Structural Reliability," Handbook of Structural Engineering, Chen, W.F. ed., CRC Press, Boca Raton, New York, 1997, pp. 26.1 – 26.39

29. Teng, S., Ma, W., Tan, K.H., and Kong, F.K., "Fatigue Tests of Reinforced Concrete Deep Beams," *The Structural Engineer*, V. 76, No. 18, September, 1998, pp. 347-352

30. Thomson, E.; Bendito, A.; Flórez-López, J., "Simplified Model of Low Cycle Fatigue for RC Frames," *Journal of Structural Engineering*, V. 124, No. 9, September, 1998, pp. 1082-1085

31. Ueda, T.; Okamura, H., "Behavior in Shear of Reinforced Concrete Beams Under Fatigue Loading," *Journal of the Faculty of Engineering*, The University of Tokyo, V. 37, No. 1, 1983, pp. 17-48

32. Ueda, T. and Okamura, H., "Behavior of Stirrup Under Fatigue Loading," *Transactions of the Japan Concrete Institute*, JCI, V. 3, 1918, pp. 305-318

Analysis of Low-Cycle Shear Fatigue in Vintage Concrete Bridge Girders

Richard W.B. Forrest and Christopher Higgins, PhD, PE

American Concrete Institute Structural Journal
38800 Country Club Drive
Farmington Hills, MI 48331
To be published

Analysis of Low-Cycle Shear Fatigue in Vintage Concrete Bridge Girders

Richard W.B. Forrest[1] and Christopher Higgins[2], PhD, PE

[1] Design Engineer, CH2M Hill, Corvallis, OR 97330 (Former Graduate Research Assistant, Dept. of Civil Engineering, Oregon State University, Corvallis, OR 97331)

[2] Associate Professor, Dept. of Civil Engineering, Oregon State University, Corvallis, OR 97331

Keywords: Reinforcing Steel, Low-cycle Fatigue, Bridges

Abstract:

Increasing load magnitudes and loss of reinforcing steel cross-sectional area from corrosion creates the potential for low-cycle fatigue (LCF) in conventionally reinforced concrete (CRC) bridge girders lightly reinforced for shear. Six (6) full-scale girders representative of 1950s vintage RCDG bridges were tested under LCF conditions. Progressive fracture of stirrup reinforcement under LCF led to eventual specimen failure. A methodology for analysis of LCF in girders was created using modified compression field theory to compute stirrup stress ranges and a linear damage model to estimate the life of a CRC girder under repeated

overloads. An equivalent stirrup spacing was used to model progressive stirrup fracture.

Introduction

Large numbers of vintage conventionally reinforced concrete (CRC) bridges that are lightly reinforced for shear remain in-service in the national bridge inventory. These bridges contain smaller sized or more widely spaced stirrups than would be permissible by modern design specifications. Additionally, those constructed in the 1950's contain poor flexural anchorage and cutoff details. Routine visual inspections of reinforced concrete deck girder (RCDG) bridges in Oregon recently identified diagonal cracking of the main girders and bent caps that has raised concern over the remaining life of these bridges. One area of interest is the effect of repeated service-level overloads on these bridges. Currently, there are no methods available for life prediction of these bridge elements under shear dominated response.

Background

Significant previous research has been conducted on the fatigue of reinforcing steel and reinforced concrete members. However, the focus has been on fatigue under high-numbers of repeated loading and low-cycle fatigue under reversed cyclic loads (seismic). Pfister and Hogenstad (1964), Burton (1965), Hanson *et. al.* (1968), Bannister (1969), Jhamb and MacGregor (1972), and Helgason *et. al.*

(1976) characterized the high-cycle fatigue behavior of reinforcing steel. Pasko (1973), Mander *et. al.* (1994), and Brown and Kunnath (2004) investigated low-cycle fatigue of reinforcement focusing on reversed cyclic loading consistent with seismic loading. Hsu (1981, 1984), Cornellisen (1984), and Martin-Perez and Pantazopoulou (1998) conducted research on the high-cycle fatigue of concrete material. High-cycle fatigue effects on bond were investigated by Rehm and Eligehausen (1979) and Balázs (1998). Research has been conducted on shear fatigue loading of CRC beams by Chang and Kesler (1958), Hawkins, (1974), Ueda and Okamura (1983), Teng *et. al.* (1998), and Kwak and Park (2001), but this has primarily concentrated on the high-cycle fatigue region and the tests have been conducted on relatively small specimens. Hwang and Scribner (1984), Thomson *et al.* (1998), and El-Bahy *et al.* (1999), investigated low-cycle fatigue (LCF) of concrete structures focusing on a very low number of cycles to failure, caused by seismic loading containing significant stress reversals. Research on LCF without reversals in structures is limited to flexure of concrete beams by Manfredi and Pecci (1996).

For long service life, ACI Committee 215 (1992) recommends a maximum service level stress range, σ_r, of:

$$\sigma_r = 161 - .33\sigma_{\min} \qquad [1]$$

where σ_{min} (MPa) is the minimum stress. The value for σ_r need not be taken as less than 138 MPa (20 ksi). The AASHTO standard specification specifies a maximum service level stress range, including impact loads as:

$$\sigma_r = 145 - .33\sigma_{min} + 55\frac{r}{h} \qquad [2]$$

where σ_{min} (MPa) is the minimum stress, and r/h is the ratio of base of lug radius to transverse deformation height. The r/h ratio is very difficult to measure accurately and consistently and when the r/h ratio is not known, a value of 0.3 is recommended by the Specification. The specified stress ranges would tend to minimize LCF for new construction. However, it is possible to have service-level stress ranges exceed the yield limit of shear reinforcement for lightly reinforced CRC bridge girders (Higgins *et. al.*, 2004). Additionally stress ranges in reinforcing bars will likely increase as vehicular loads increase in the future or if reinforcement as subject to corrosion. These combined effects increase the potential for LCF in bridges that are lightly reinforced for shear.

Research Significance

Stirrup stresses in lightly-reinforced vintage concrete bridges may exceed the elastic limit under service-level overloads. Repeated overloading of these members may cause the potential for low-cycle fatigue whereby the member capacity is diminished. These overload conditions can occur from special permit loads, the coincidence of heavy permit loads, or corrosion effects that might

locally reduce the cross-sectional area of reinforcement. A further understanding of the low-cycle fatigue behavior and methodologies for estimation of low-cycle fatigue life for CRC bridge elements are required.

Experiment Description and Observations

Low-cycle fatigue tests of six full-scale reinforced concrete girders were performed. Specimens were designed to reflect 1950's vintage RCDG bridge girder proportions and material properties. Specimen cross section was 1219 mm (48 in.) overall height with a 356 mm (14 in.) wide stem and included a 152 mm (6 in.) thick deck portion that was 914 mm (3 ft.) wide (Fig. 3.1). The beams were tested in both the T (deck in compression) and inverted-T (deck in tension) configurations. Different shear reinforcement, flexural anchorages, and flexural cutoff details were tested as shown in Fig. 3.2. Shear reinforcement was ASTM A615 Grade 300 (40 ksi.) while flexural reinforcement was Grade 420 (60 ksi). Material properties for the specimens are shown in Table 1.

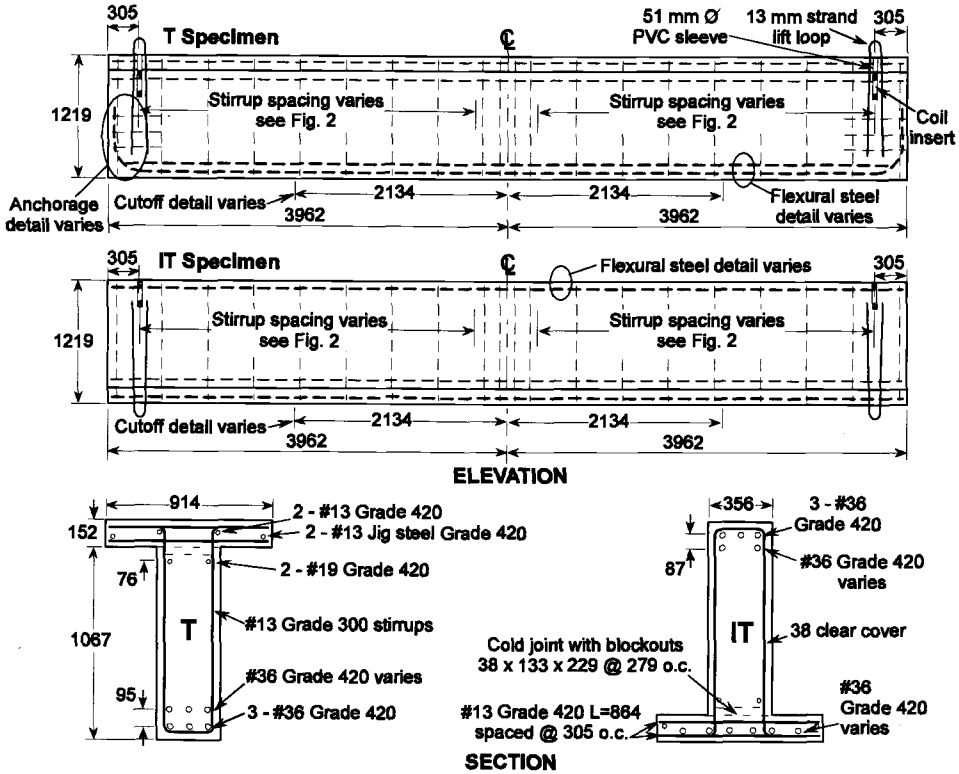

Fig. 3.1. Typical full-scale LCF specimen (units = mm).

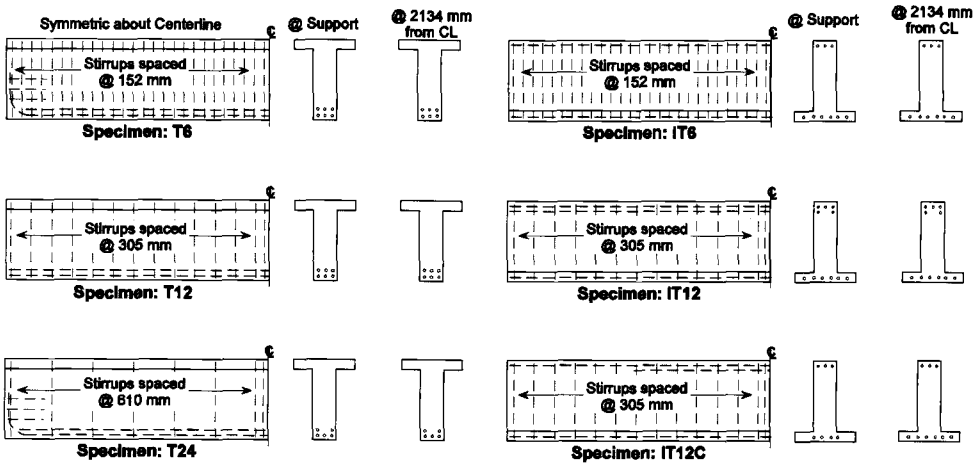

Fig. 3.2. Stirrup and flexural details of LCF specimens.

Table 3.1. Material properties for low-cycle fatigue specimens.

Specimen	f'_c (MPa)	Stirrup f_y (MPa)	Flexural f_y (MPa)	Span Length (m)	M/V (m)	V_{R2K} (kips)	V_{tot}/V_{R2K}	Crack Width @ load (mm)	Notes
T6	31.6	353.5	493.7	6.61	1.95	1105	0.95	0.76	cut stirrup
IT6	30.0	353.5	515.7	6.61	1.90	1228	0.75	1.78	cut stirrup
IT12	29.7	353.5	477.1	6.61	1.90	920	0.91	1.27	
IT12C	31.8	353.5	488.1	6.61	1.90	890	0.91	0.64	cut Flexural
T12	32.0	353.5	488.1	6.61	2.31	862	0.87	1.02	
T24	23.8	353.5	477.8	7.32	2.30	561	0.85	1.27	

Test specimens were initially cracked to impose diagonal cracks commensurate with inspection data of in-service bridges. Typical initial diagonal crack widths at the maximum load prior to starting LCF loading are shown in Table 1. Load was applied to the specimens using a 2224 KN (500 kip) capacity hydraulic actuator. Tests were conducted in load control using a closed-loop servo-hydraulic system. Loading during initial cracking was applied in 222 KN (50 kip) increments and followed with unloading before increasing to the next higher load magnitude. Strains were measured by bonded strain gages placed at mid-height of the shear reinforcement prior to casting the concrete. Diagonal-crack widths were measured visually using a crack comparator during the initial cracking process. Once

prominent diagonal cracks were identified, displacement sensors were placed perpendicular to the crack direction to measure crack deformation. Stirrups crossing the prominent diagonal cracks were exposed by chipping away concrete and allowing strain gages to be applied to the exposed stirrups. Centerline displacement was measured as were diagonal displacements across the web. A typical instrumentation scheme is shown in Fig. 3.4.

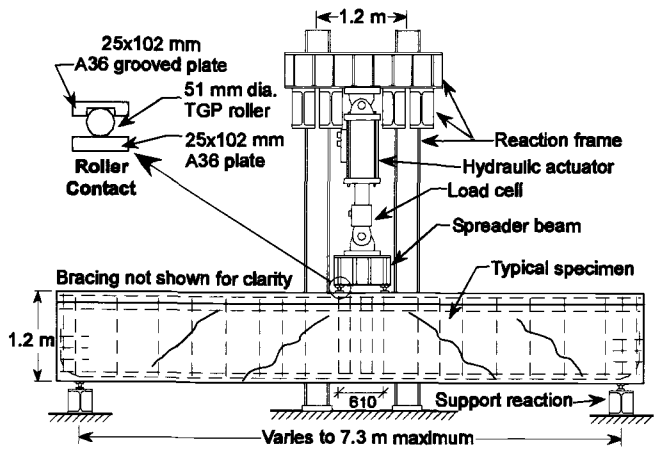

Fig. 3.3. Schematic of test setup.

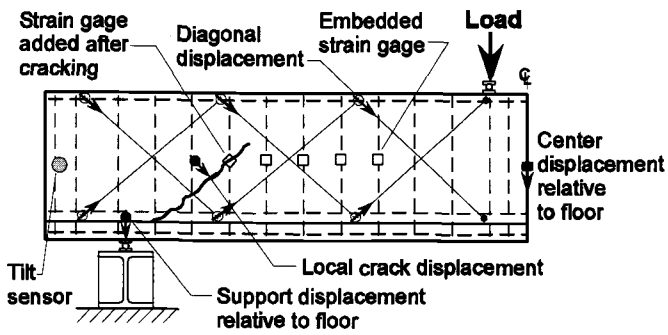

Fig. 3.4. Instrumentation for typical LCF Specimen.

The beams were subjected to high-magnitude cyclic loads without reversal after cracking. Repeated loading was applied to the specimens at a nominal rate of 0.7 Hz. Load magnitudes were increased for some specimens if the member response became linear (secondary phase response as described later). Load histories imposed for each of the specimens can be seen in Fig. 3.5. Both local and global responses were continuously monitored during the tests. Example diagonal displacement response across the eventual failure crack for all LCF specimens can be seen in Fig. 3.6.

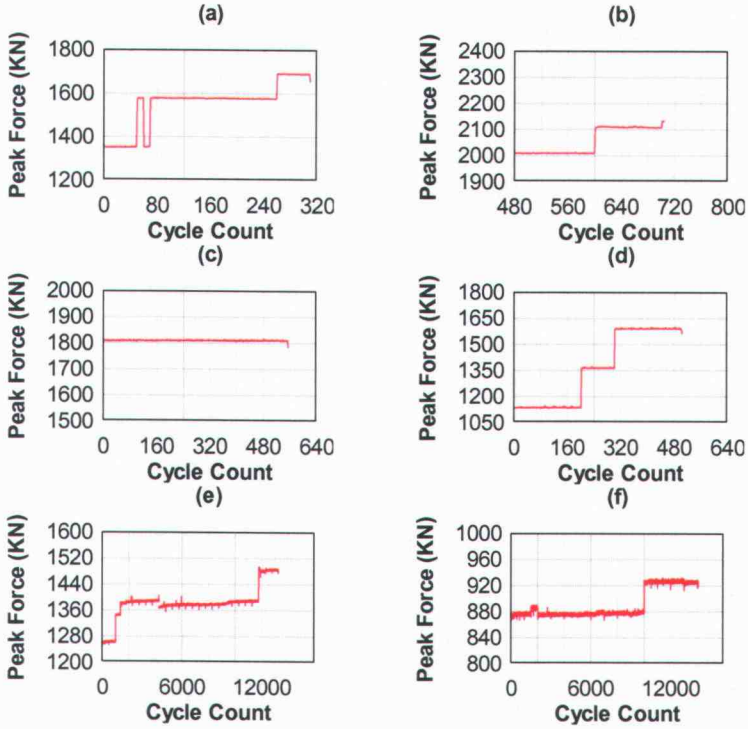

Fig. 3.5. Load history for the following LCF specimens:
a) IT12, b) T6, c) IT6, d) T12, e) IT12C, f) T24.

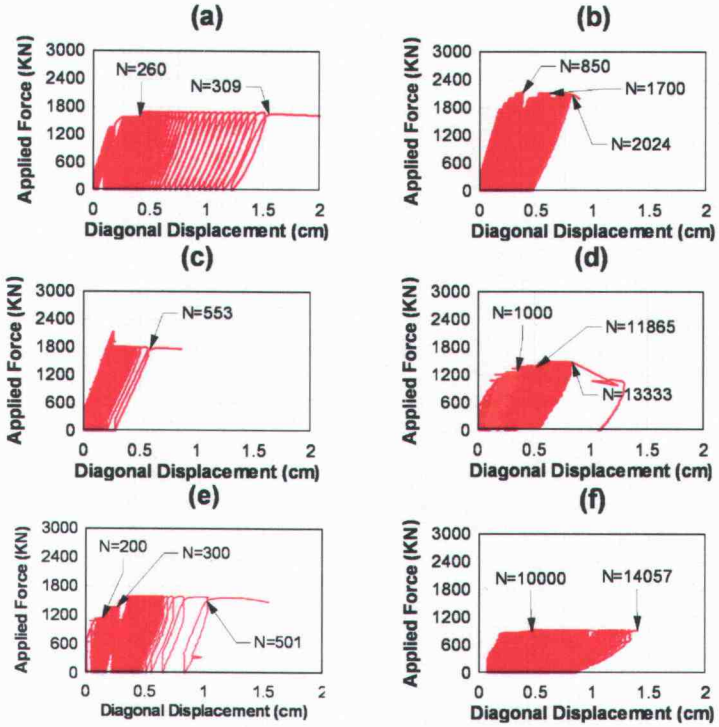

Fig. 3.6. Diagonal displacement response for the following LCF Specimens: a) IT12, b) T6, c) IT6, d) T12, e) IT12C, f) T24.

The member displacement and stirrup strain responses were observed to have three distinct phases which are similar to those reported for bond fatigue (Balázs 1998). An initial phase consisted of non-linearly increasing displacements and strains with amplitude increases for successive cycles becoming progressively smaller. The secondary phase consisted of approximately linearly increasing displacements and strains. The final phase consisted of rapidly increasing

displacements and strains that end in beam failure. The three phases of low-cycle fatigue are illustrated in Fig. 3.7 for specimen T24.

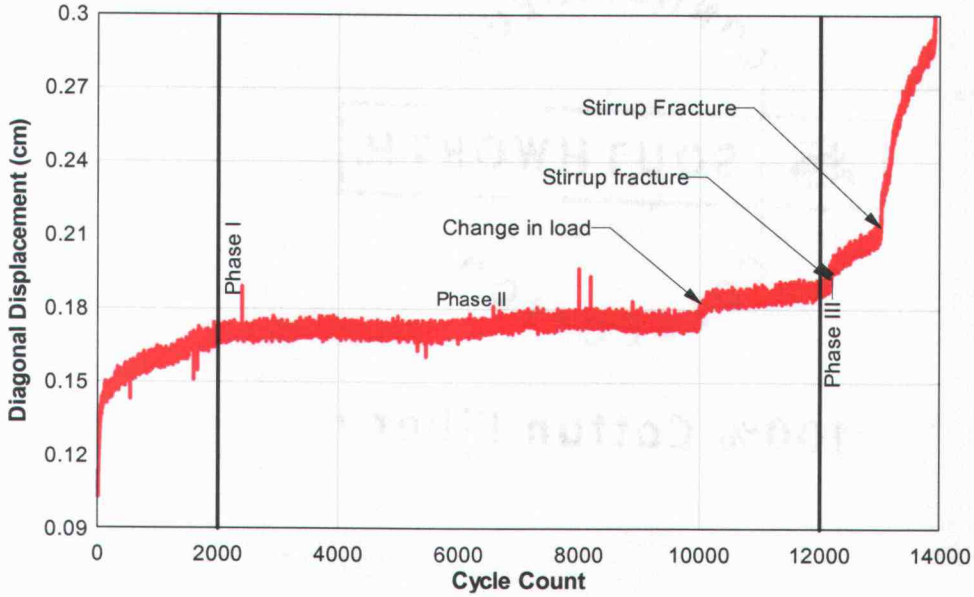

Fig. 3.7. Example of LCF response for specimen T24.

When specimens were observed to exhibit secondary phase response at a given load range, a higher level of loading was applied to the specimen. The specimen response to the newly increased load amplitude was observed to have characteristics of an initial damage phase. Damage during the secondary phase accumulated more quickly for the higher levels of loading than at the lower load. When the load amplitude on a specimen was reduced, the specimen exhibited the secondary phase of response immediately at the lower load level. The observed

rates of displacement and strain increase in the secondary phase were less than those of the higher load.

Stirrup strains were negligible until formation of diagonal cracks and exhibited nonlinear response after reaching the yield point during concrete diagonal-crack propagation. However, stirrup strains behaved linearly upon reloading until a load amplitude above the previous maximum was obtained. Specimens with flexural bar cutoffs in the flexural tension zone and subjected to both high shear and high moment exhibited higher strains than corresponding specimens without the cutoff detail. Stirrup strains at mid-height of the web were observed to be higher in the beams with the cutoff detail at equivalent load levels. Correlation of the actual average stirrup stress with the measured stirrup strains is subject to some experimental uncertainty related to the strain gage location on the reinforcement relative to the diagonal crack location, degree of debonding associated with initial installation and damage process during testing, location of the strain gage within the deformation pattern on the reinforcement (for those installed after cracking), and the gage length of applied strain gages. These make direct correlation of in-situ stirrup strain to stress using monotonic constitutive relationships uncertain. However, the relative magnitudes of stirrup strain in different specimens, indication of yielding, and degree of inelastic strain (if not the exact stress magnitude) provided distinction between specimens.

Stirrup fractures were observed during LCF testing. Beams did not fail immediately after the first stirrup fracture was observed, but failed through progressive damage and the fracture of additional stirrups. None of the beams failed as a result of flexure, anchorage loss, or flexural reinforcing steel fracture. All specimens exhibited shear-compression failures after stirrup fracture, indicating the stirrups primarily controlled LCF failures.

The test program included two specimens with 152 mm (6 in.) stirrup spacing. These specimens were chosen to investigate progressive stirrup fracture, with one specimen subjected to constant load amplitude and the other to variable load amplitude. The specimens were subjected to LCF loading and stirrups were periodically cut to simulate progressive damage from stirrup fracture. Stirrup strain redistribution was noted after a stirrup was cut. It was observed that for the closely spaced stirrups, strains increased more significantly in the adjacent stirrups on the same face than that of the stirrup leg directly opposite the cut stirrup. When the spacing in the face of the web became larger than the spacing across the web between the legs of a stirrup, then strains tended to redistribute more toward the closest available stirrup leg.

Additional experiments were also performed to assist in analyzing the LCF life of the reinforced concrete girders. Forty (40) LCF tests and 10 in-concrete LCF tests were conducted on pieces of the stirrup reinforcement taken from the same heat of

steel as that used in the girders. A non-reversing LCF load was applied to the specimens until fracture. The following equations were found to represent the mean and 5% and 95% fractiles for cycles to failure:

$$\bar{S} = 625.3 - 42.8\log(N) \quad [3]$$

$$S_{5\%} = 605.4 - 40.1\log(N) \quad [4]$$

$$S_{95\%} = 645.8 - 46.1\log(N) \quad [5]$$

where $\bar{S}$, $S_{5\%}$, and $S_{95\%}$ are the mean and 5% and 95% fractile stress ranges (MPa), respectively, and N is the number of cycles to failure. Ten samples of #13 (#4) reinforcing steel were also tested monotonically to characterize the stress-strain response of the reinforcement. A complete description of the stirrup reinforcing steel tests and findings is found in Forrest, 2005.

Analysis of Specimens for Low-Cycle Fatigue

Data obtained from the LCF tests without stress reversal of #13 (#4) reinforcing bars were used to analyze the LCF life of the CRC girder specimens. The first required step was to estimate the stress range in the shear reinforcement at the cross-section of interest. A specialty computer analysis program called Response 2000 (R2K) (Bentz, 2000) was used to estimate the stirrup strains in the cross section. The program uses sectional analysis and is based on modified compression field theory (Vecchio and Collins, 1986). Concrete and reinforcing steel material properties, obtained from those used in the specimens, were input

into the program. The default concrete tensile strength of $0.45(f'_c)^{0.4}$ (MPa) was used in the program. To perform the analysis, the section response option in R2K was used and the moment to shear ratio (M/V) was taken at the mid-height location on the failure diagonal crack.

Modification to the stirrup material input for R2K was required to reflect the observed stirrup constitutive behavior for the LCF specimens. When the default stirrup material rules are used, the resulting stirrup stresses are only slightly above the yield point and indicated nonlinear response due to yielding. However, under the repeated load in the secondary phase of response, where much of the fatigue life is found, the stirrups effectively behave linear-elastically due to the cold-working done by the loading. This linear behavior was approximated in R2K by increasing the yield stress for the shear reinforcement to that of the ultimate stress found from the monotonic stirrup sample tests. The average stirrup stress was then calculated by selecting an applied shear magnitude corresponding to that observed in the full-scale specimen for the M/V ratio at the failure diagonal crack. This shear also included the self-weight of the member on the failure crack. As will be seen, this approach for estimating stirrup stress provided a good approximation for the LCF life of the CRC girder specimens.

The maximum average stirrup stress at the section was chosen from the program output to estimate the number of cycles to failure for the girder. The number of

cycles available for the given stress range was determined based on the reinforcing steel S-N curves developed for the stirrups. The corresponding $\overline{N}$, $N_{5\%}$, and $N_{95\%}$ values were obtained from Eqs.3-5. This fatigue life in terms of the number of load cycles to failure was determined using a linear damage rule first introduced by Palmgren (1924) and later revised by Miner (1945):

$$\frac{n_1}{N_1}+\frac{n_2}{N_2}+\frac{n_3}{N_3}+\ldots\frac{n_n}{N_n}=1 \qquad [6]$$

where n_n = the number of cycles at a particular stress range and N_n = the number of cycles to failure at a particular stress range. The implementation of the linear damage accumulation for an example variable amplitude loading history is illustrated in Fig. 3.8. In sections that are very lightly reinforced for shear, failure of the specimen occured shortly after fracture of the first stirrup. Thus, prediction of member failure was based on fracture of the first stirrup. Non-linear damage rules may also be considered to incorporate load sequence effects and stress amplitude dependence. However these require substantial additional testing to effectively determine model shaping constants to fit the wide range of variables, can be significantly more complicated, and may not provide better life estimates for actual conditions (Bannantine *et al.*, 1990). In particular, field conditions can have very large uncertainties associated with them and nonlinear damage models may not be of practical value.

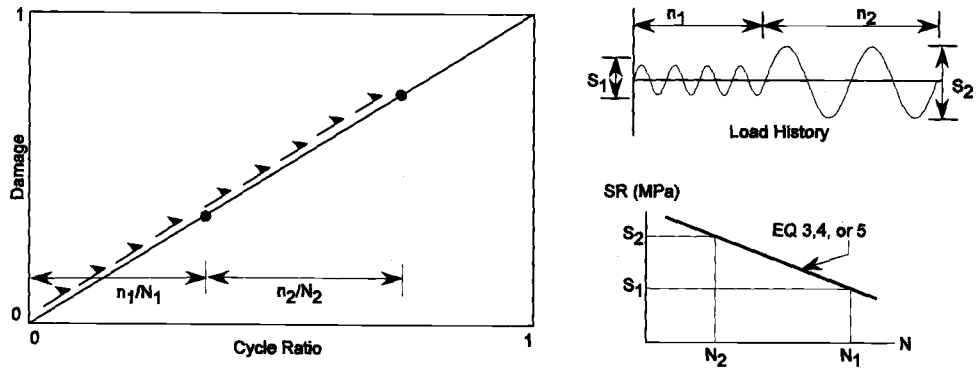

Fig. 3.8. Application linear damage theory for variable amplitude loading.

For specimens with tightly-spaced stirrups, failure did not occur soon after the first stirrup fracture. For cases incorporating progressive fracture of stirrups (simulated experimentally by cutting stirrups), analysis was performed using an iterative approach. As observed in the experimental results, stirrup strains did not necessarily redistribute directly across the web to the remaining leg of the fractured stirrup, but may redistribute to adjacent stirrups on the same face. The effects of stirrup fracture was modeled by developing an effective stirrup spacing for the section. The effective stirrup spacing was then used in R2K to perform subsequent analysis. The effective spacing of stirrups crossing the diagonal crack was computed as:

$$s_{eff} = \frac{d_v \cot\theta s_o}{d_v \cot\theta - \frac{ns_o}{2}} \qquad [7]$$

where n is the number of fractured stirrup legs, d_v is the distance between the flexural compression and tension resultants, s_o is the original stirrup spacing, and

θ is the angle of the diagonal crack (the crack angle based on AASHTO Table 5.8.3.4.2-1 (AASHTO LRFD 2004) may be appropriate to use if the true angle is unknown). The effective stirrup spacing would be more precisely defined, if possible, from visual inspection of the diagonal crack and determining the actual number of stirrup crossings.

The linear damage rule was again applied for the new stirrup stress level to determine the damage in the section. Sections with stirrup spacing of 305 mm (12 in.) and larger were analyzed for progressive stirrup fracture using this method but in some cases failure was computed after the first stirrup fracture because the section could not redistribute the internal stresses. Based on experimental results, specimens with wide stirrup spacing were able to continue carrying load after the first stirrup fracture, when the applied load range remained below the capacity of the section containing the fractured stirrups. The analysis method that computed member failure based on first fracture provides a more conservative life estimation and the interactive method including stress redistribution is better suited for small stirrup spacing or lower applied load magnitudes.

Low-cycle fatigue life analysis using average stirrup stresses from R2K and the shear reinforcement S-N curve resulted in slightly unconservative (longer predicted life than observed) fatigue lives relative to the mean line. The applied shears used in the section calculations in R2K need to be increased to calibrate the

observed number of cycles with the required stirrup stress range to the mean number of cycles to failure. The applied shear was increased by a factor of 1.0 to 1.05 above the experimental values which resulted in mean predicted lives similar to the experimentally observed fatigue life. This increase in the shear magnitude reflects the inherent uncertainty in determining the local stirrup stresses resulting from dimensional (stirrup spacing, member dimensions, M/V location), material (stirrup properties and f'_c), and behavioral variability (shear and moment interaction with localized bond deterioration). However, the analysis method provided reasonably good correlation given the problem complexity. A nominal increase in applied shear of 10% resulted in consistently conservative analysis results relative to the mean line. Using this analysis procedure, low-cycle fatigue life curves for the girder specimens were developed. The V-N curves for the specimens are shown in Fig. 3.9. Tested specimens are represented in Fig. 3.9 using an equivalent constant amplitude shear load range derived from the linear damage rule:

$$VR_{eqv} = \sqrt[3]{\sum \frac{n_i}{N_{tot}} VR_i^{\,3}} \qquad [8]$$

Where V_{ri} is the ith shear-load range(KN), n_i is the number of cycles observed for the ith shear-load range and N_{tot} is the total number of cycles at all shear-load ranges. It is important to note that inherent in these curves is the shear and moment interaction at the critical section, from the MCFT based analysis methodology in R2K, and not simply the shear force magnitude. As can be seen in

Fig. 3.9, the effect of the flexural bar cutoff (Specimen IT12C) resulted in reduced low-cycle fatigue life compared to an otherwise similar specimen without the flexural cutoff detail (Specimen IT12).

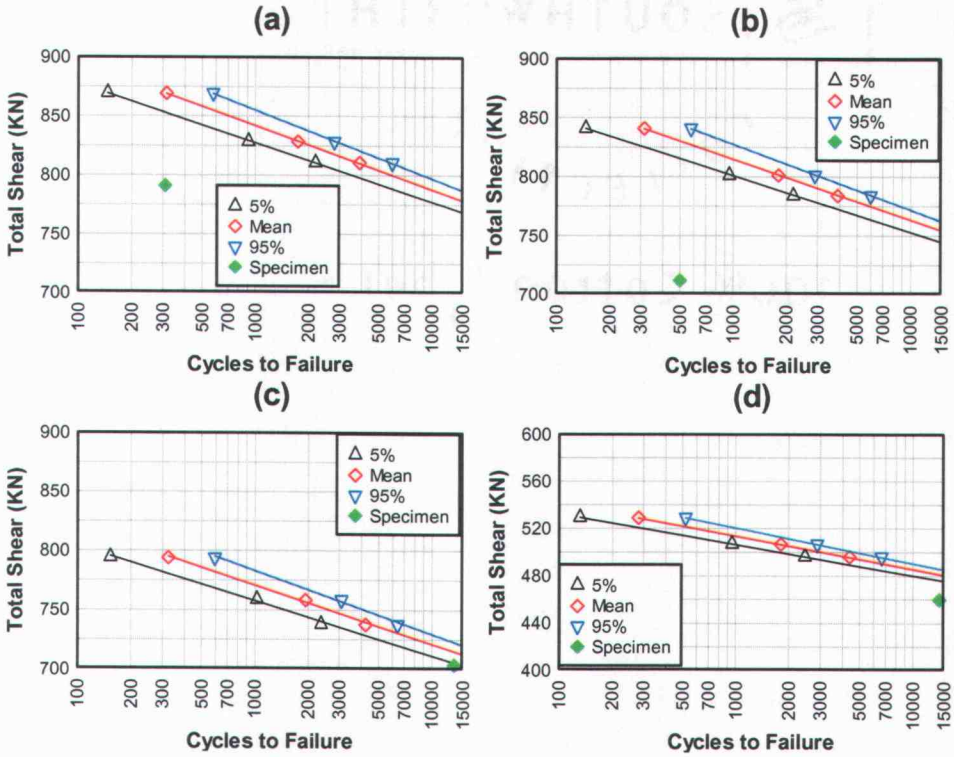

Fig.3. 9. LCF life prediction curves for LCF Specimens:
a) IT12, b) IT12C, c) T12, d) T24.

Comparison analyses were conducted using the above methodology for 305 mm (12 in.), 457 mm (18 in.), and 610 mm (24 in.) stirrup spacings for a cross section containing flexural reinforcement and M/V ratio as specimen T12 (Fig. 3.2). Materials were held constant for these analyses. Analysis results are shown in Fig. 3.10a. It can be seen that increased stirrup spacing reduced both the nominal

capacity of the section and the fatigue life of the section. The same section was analyzed with consideration of a cutoff of 3 of the 6 flexural bars located 1.2 m (3.8 ft) from the support. The cutoff detail was incorporated in the R2K analysis using an area of tension steel based on the percentage of the capacity of the partially-developed cutoff bars available at the critical M/V section. As seen in Fig. 3.10a, the cutoff detail reduced the fatigue life of the section. This same girder T-section was analyzed with constant 305 mm (12 in.) stirrup spacing for various M/V ratios (Fig. 3.10b). It can be seen that fatigue life decreased as M/V ratios increased for the section considered and demonstrates the interaction of moment and shear on LCF life of the CRC girder.

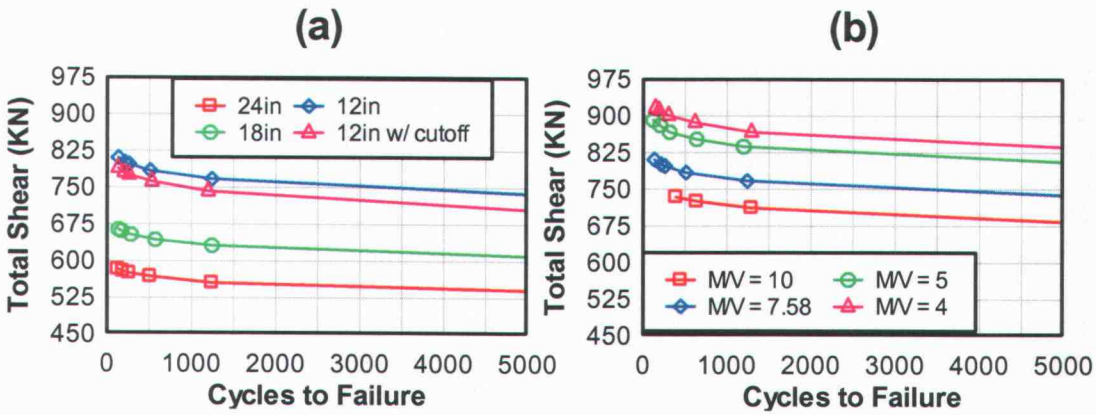

Fig. 3.10. LCF Life prediction for different specimen configurations:
a) varied stirrup spacing and cutoff details, b) varied moment/shear ratios.

Conclusions

LCF tests were performed on 6 full-size CRC bridge girders containing various shear and flexural reinforcement details. The girder LCF test data, along with shear reinforcement LCF tests, were used to create a methodology for analyzing CRC bridge girders for low-cycle fatigue. A linear damage rule was applied to account for variable amplitude loading. An expression for effective stirrup spacing was developed to account for the redistribution of stresses after stirrup fracture. Based on the reported laboratory results analysis results, the following conclusions are presented:

- Specimens failed under LCF loading at loads below the nominal capacity.
- Stirrup fracture under LCF lead to eventual failure of the girder specimens
- Experimentally observed strain in the stirrups was elastic during cycling at a constant load range.
- Sectional analysis based on MCFT was used to approximate stirrup stress levels in shear reinforcement under LCF loading.
- Linear damage modeling, using MCFT stirrup stress range and stirrup material LCF life curves, provided a reasonable estimation of LCF life for girder specimens.
- Flexural reinforcement cutoffs reduced the experimentally observed and analytically predicted LCF life.

The analysis method provides a tool for estimating the low-cycle fatigue life of CRC bridge girders under shear dominated loading. The available fatigue life can be compared with estimates of past overloads and future demands to optimize routes for special permit loads or identify bridges for more detailed inspection on corridors likely to see frequent overloads. It is important to note that actual life may vary from that presented here due to material and stirrup deformation variability as well as the condition of in-situ reinforcing steel. Ongoing research at Oregon State University is underway to assess the fatigue life of vintage reinforcing steels that will provide additional data on fatigue life of in-service CRC bridges.

Acknowledgements

Support for this project was provided by the Federal Highway Administration and the Oregon Department of Transportation. Mr. Steve Soltesz was the research coordinator and his assistance is greatly appreciated. The authors wish to thank: Professor Timothy Kennedy, and Professor Jamie Kruzic, of Oregon State University's Department of Mechanical Engineering for helpful suggestions on stress and fatigue analysis of the specimens and Mr. Grahme Williams for testing assistance.

References

1. Bannantine, J.A.; Comer, J.J.; Handrock, J.L., "Fundamentals of Metal Fatigue Analysis," Prentice Hall, Upper Saddle River, NJ, 1990, pp. 273
2. Bannister, J.L., "The Behaviour of Reinforcing Bars under Fluctuating Stress," *Concrete,* V. 3, No. 10, October 1969, pp. 405-409
3. Bentz, E., (2000), Response 2000, University of Toronto, http://www.ecf.utoronto.ca/~bentz/r2k.htm
4. Brown, J.; Kunnath, S.K., "Low-Cycle Fatigue Failure of Reinforcing Steel Bars" *ACI Materials Journal*, V.101, No. 6, November-December, 2004, pp. 457-466
5. Burton, K.T., "Fatigue Tests of Reinforcing Bars," *Journal of the PCE Research and Development Laboratories*, V.7, No. 3, September, 1965, pp. 13-23
6. Chang, T.S.; Kesler, C.E., "Static and Fatigue Strength in Shear of Beams with Tensile Reinforcement," Journal of the American Concrete Institute, V. 54, No. 6, June, 1958, pp. 1033-1057
7. Cornellisen, H.A.W., "Fatigue Failure of Concrete in Tension," *Heron*, V. 29, No. 4, 1984, pp. 1-55
8. El-Bahy, A; Kunnath, S.K.; Stone, W.C., Taylor, A.W., "Cumulative Seismic Damage of Circular Bridge Columns: Benchmark and Low-Cycle Fatigue Tests," *ACI Structural Journal*, V96, No. 4, July/August, 1999, pp. 633-641

9. El-Bahy, A; Kunnath, S.K.; Stone, W.C., Taylor, A.W., "Cumulative Seismic Damage of Circular Bridge Columns: Benchmark and Low-Cycle Fatigue Tests," *ACI Structural Journal*, V96, No. 5, September/October, 1999, pp. 711-719

10. Forrest, R., "Analysis of Low-Cycle Fatigue Without Stress Reversals in Reinforcing Steel

11. Hanson, J.M.; Burton, K.T.; and Hognestad, E., "Fatigue Tests of Reinforcing Bars- Effect of Deformation Pattern," *Jornal of the PCA Research and Development Laboratories*, V. 10, No. 3, September, 1968, pp. 2-13

12. Hawkins, N.M., "Fatigue Characteristics in Bond and Shear of Reinforced Concrete Beams," *SP-41: Abeles Symposium: Fatigue of Concrete, American Concrete Institute*, Farmington Hills, MI, 1974, pp 203-236

13. Helgason, T.; Hanson, J.M.; Somes, N.F., Corley, G.; and Hognestad, E., "Fatigue Strength of High-Yield Reinforcing Bars," *NCHRP Report 164*, Transportation Research Board, Washington D.C., 1976, 90 pp.

14. Hsu, T.T.C., "Fatigue and Microcracking of Concrete," *Materials and Structures*, V. 17, No. 97, Jan-Feb, 1984, pp. 51-54

15. Hsu, T.T.C., "Fatigue of Plain Concrete," Journal *of the American Concrete Institute*, V. 78, No. 4, July, 1981, pp. 292-305

16. Hwang, T.; Scribner, C.F., "RC Member Cyclic Response during Various Loadings," *Journal of Structural Engineering*, V. 110, No. 3, March, 1984, pp. 477-489

17. Jhamb, I.C.; MacGregor, J.G., "Structural Report 39: Fatigue of Reinforcing Bars," Department of Civil Engineering, The University of Alberta, Edmonton, AB, February, 1972, pp. 227.

18. Kwak, K-H.; Park, J-G., "Shear-Fatigue Behavior of High-Strength Concrete Under Repeated Loading," *Structural Engineering and Mechanics*, V. 11, No. 3, March, 2001, pp. 301-314

19. Mander, J.B.; Panthaki, F.D.; and Dasalanti, A., "Low-cycle fatigue Behavior of Reinforcing Steel," *Journal of Materials in Civil Engineering*, ASCE, V. 6, No. 4, 1994, pp. 453-467

20. Manfredi, G.; Pecce, M., "Low Cycle Fatigue of RC Beams in NSC and HSC," *Engineering Structures*, V. 19, No. 3, March, 1997, pp. 217-223

21. Martín-Pérez, B.; Pantazopoulou, S.J., "Mechanics of Concrete Participation in Cyclic Shear Resistance of RC," *Journal of Structural Engineering*, V. 124, No. 6, June, 1998, pp. 633-641

22. Miner, M.A., "Cumulative Damage in Fatigue," *Journal of Applied Mechanics*, V. 12, No. 3, September, 1945, pp. A159-A164

23. Palmgren, A., "Die Lebensdaur von Kugellagern (The Service Life of Ball Bearings)," Zeitschrift des Vereines Deutscher Ingenieure, V. 68, No. 14, 1924, pp. 339-341

24. Pasko, T.J., "Fatigue of Welded Reinforcing Steel," *ACI Journal*, V. 70, No. 11, November, 1973, pp. 757-758

25. Pfister, J.F.; Hognestad, E., "High Strength Bars as Concrete Reinforcement," *Journal of the PCA Research and Development Laboratories*, V. 6, No. 1, January, 1964, pp. 65-84

26. Teng, S. *et. al.*, "Fatigue Tests of Reinforced Concrete Deep Beams," *The Structural Engineer*, V. 76, No. 18, September, 1998, pp. 347-352

27. Thomson, E.; Bendito, A.; Flórez-López, J., "Simplified Model of Low Cycle Fatigue for RC Frames," *Journal of Structural Engineering*, V. 124, No. 9, September, 1998, pp. 1082-1085

28. Ueda, T.; Okamura, H., "Behavior in Shear of Reinforced Concrete Beams under Fatigue Loading," *Journal of the Faculty of Engineering, University of Tokyo, Series B*, V. 37, No. 1, March, 1983, pp. 17-48

29. Vecchio, F.J.; Collins, M.P., "The Modified Compression Field Theory for Reinforced Concrete Elements Subjected to Shear," *ACI Journal*, V. 83, No. 2, March-Apri, 1986, pp. 219-231

General Conclusion

LCF tests without stress reversals for #13 (#4) ASTM Grade 615-00 (f_y= 276 MPa) reinforcing bars were conducted. LCF tests were also performed on six CRC bridge girders with varying shear reinforcement and flexural reinforcement details. An S-N curve was developed for LCF behavior without stress reversals in #13 (#4) reinforcing bars. Additional research is underway at Oregon State University to characterize the LCF behavior of reinforcing steel without stress reversals in vintage steel obtained from 1950's era RCDG bridges and additional samples are being sought by the authors.

The girder LCF test data was used to create a methodology for analyzing in-service bridge girders for low-cycle fatigue. The linear damage rule was applied to account for variable amplitude loading. An expression for stirrup spacing was also developed to account for the redistribution of stresses after stirrup fracture.

The analysis methodology provides a tool for estimating the low-cycle fatigue life of CRC bridge girders under shear dominated loading. The available fatigue life can be compared with estimates of past overloads and future demands to optimize routes for special permit loads or to identify bridges for more detailed inspection on corridors likely to see frequent overloads.

Bibliography

1. ASTM Specification A15-50T, "Tentative Specifications for Billet Steel Bars for Concrete Reinforcement," ASTM International, Philadelphia, PA, 1950, pp. 207-210
2. ASTM Specification A305-50, "Tentative Specifications for Minimum Requirements for the Deformations of Deformed Steel Bars for Concrete Reinforcement," ASTM International, Philadelphia, PA, 1950, pp. 218-220
3. ASTM Specification A615/A615M-00, "Standard Specification for Deformed and Plain Billet-Steel Bars for Concrete Reinforcement," West Conshohocken, PA, pp. 296-300
4. ACI Committee 318 (2005), "Building Code Requirements for Structural Concrete," American Concrete Institute, Farmington Hills, MI, 2005, pp. 430
5. Balázs, G.L, "Bond Under Repeated Loading," SP 180-6: Bond and Development of Reinforcement, A Tribute to Dr. Peter Gergely, Leon, R. (Editor), American Concrete Institute, Farmington Hills, MI, 1998, pp. 125-143
6. Bannantine, J.A.; Comer, J.J.; Handrock, J.L. "Fundamentals of Metal Fatigue Analysis," Prentice Hall, Upper Saddle River, NJ., 1990, 273pp.

7. Bannister, J.L., "The Behaviour of Reinforcing Bars under Fluctuating Stress," *Concrete,* V. 3, No. 10, October 1969, pp. 405-409

8. Bentz, E., (2000), Response 2000, University of Toronto, http://www.ecf.utoronto.ca/~bentz/r2k.htm

9. Brown, J.; Kunnath, S.K., "Low-Cycle Fatigue Failure of Reinforcing Steel Bars" *ACI Materials Journal*, V.101, No. 6, November-December, 2004, pp. 457-466

10. Burton, K.T., "Fatigue Tests of Reinforcing Bars," *Journal of the PCE Research and Development Laboratories*, V.7, No. 3, September, 1965, pp. 13-23

11. Chang, T.S.; Kesler, C.E., "Static and Fatigue Strength in Shear of Beams with Tensile Reinforcement," Journal of the American Concrete Institute, V. 54, No. 6, June, 1958, pp. 1033-1057

12. Cornellisen, H.A.W., "Fatigue Failure of Concrete in Tension," *Heron*, V. 29, No. 4, 1984, pp. 1-55

13. Dodd, L.L.; Restrepo-Posada, J.I., "Model for Predicting Cyclic Behavior of Reinforcing Steel," *Journal of Structural Engineering*, ASCE, V. 121, No. 3, 1995, pp. 433-445

14. Dowling, N., "Mechanical Behavior of Materials: Engineering Methods for Deformation, Fracture, and Fatigue (2nd Edition)," Prentice Hall, Upper Saddle River, NJ., 1990, 830pp.

15. El-Bahy, A; Kunnath, S.K.; Stone, W.C., Taylor, A.W., "Cumulative Seismic Damage of Circular Bridge Columns: Benchmark and Low-Cycle Fatigue Tests," *ACI Structural Journal*, V96, No. 4, July/August, 1999, pp. 633-641

16. El-Bahy, A; Kunnath, S.K.; Stone, W.C., Taylor, A.W., "Cumulative Seismic Damage of Circular Bridge Columns: Benchmark and Low-Cycle Fatigue Tests," *ACI Structural Journal*, V96, No. 5, September/October, 1999, pp. 711-719

17. Erberik, A.; Sucuoğlu, H., "Seismic Energy Dissipation in Deteriorating Systems Through Low-Cycle Fatigue," *Earthquake Engineering and Structural Dynamics*, V. 33, No. 1, November, 2003, pp. 49-67

18. Hanson, J.M.; Burton, K.T.; and Hognestad, E., "Fatigue Tests of Reinforcing Bars- Effect of Deformation Pattern," *Jornal of the PCA Research and Development Laboratories*, V. 10, No. 3, September, 1968, pp. 2-13

19. Hawkins, N.M., "Fatigue Characteristics in Bond and Shear of Reinforced Concrete Beams," SP-41: Abeles Symposium – Fatigue of Concrete, American concrete Institute, Detroit, Michigan, pp. 203-236

20. Helgason, T.; Hanson, J.M.; Somes, N.F., Corley, G.; and Hognestad, E., "Fatigue Strength of High-Yield Reinforcing Bars," *NCHRP Report 164*, Transportation Research Board, Washington D.C., 1976, 90 pp.

21. Higgins, C; et. al. "Research Project SPR 350 SR 500-91: Assessment Methodology for Diagonally Cracked Reinforced Concrete Deck Girders," Oregon Department of Transportation, Salem, OR, October, 2004

22. Hsu, T.T.C., "Fatigue and Microcracking of Concrete," *Materials and Structures*, V. 17, No. 97, Jan-Feb, 1984, pp. 51-54

23. Hsu, T.T.C., "Fatigue of Plain Concrete," Journal *of the American Concrete Institute*, V. 78, No. 4, July, 1981, pp. 292-305

24. Hwang, T.; Scribner, C.F., "RC Member Cyclic Response during Various Loadings," *Journal of Structural Engineering*, V. 110, No. 3, March, 1984, pp. 477-489

25. Jhamb, I.C.; MacGregor, J.G., "Structural Report 39: Fatigue of Reinforcing Bars," Department of Civil Engineering, The University of Alberta, Edmonton, AB, February, 1972, pp. 227.

26. Koh, S.K.; Stephens, R.I., "Mean Stress Effects on Low Cycle Fatigue for a High Strength Steel," *Fatigue and Fracture of Engineering Materials and Structures*, V. 14, No. 4, 1991, pp. 413-428

27. Kwak, K-H.; Park, J-G., "Shear-Fatigue Behavior of High-Strength Concrete Under Repeated Loading," *Structural Engineering and Mechanics*, V. 11, No. 3, March, 2001, pp. 301-314

28. Mander, J.B.; Panthaki, F.D.; and Dasalanti, A., "Low-cycle fatigue Behavior of Reinforcing Steel," *Journal of Materials in Civil Engineering*, ASCE, V. 6, No. 4, 1994, pp. 453-467

29. Manfredi, G.; Pecce, M., "Low Cycle Fatigue of RC Beams in NSC and HSC," *Engineering Structures*, V. 19, No. 3, March, 1997, pp. 217-223

30. Martín-Pérez, B.; Pantazopoulou, S.J., "Mechanics of Concrete Participation in Cyclic Shear Resistance of RC," *Journal of Structural Engineering*, V. 124, No. 6, June, 1998, pp. 633-641

31. Mills, K.ed., "ASM Handbook, Formerly Ninth Edition, Metals Handbook, Volume 12: Fractography," ASM International, Materials Park, Ohio, 1987, pp. 517

32. Miner, M.A., "Cumulative Damage in Fatigue," *Journal of Applied Mechanics*, V. 12, No. 3, September, 1945, pp. A159-A164

33. Palmgren, A., "Die Lebensdaur von Kugellagern (The Service Life of Ball Bearings)," Zeitschrift des Vereines Deutscher Ingenieure, V. 68, No. 14, 1924, pp. 339-341

34. Pasko, T.J., "Fatigue of Welded Reinforcing Steel," *ACI Journal*, V. 70, No. 11, November, 1973, pp. 757-758

35. Pfister, J.F.; Hognestad, E., "High Strength Bars as Concrete Reinforcement," *Journal of the PCA Research and Development Laboratories*, V. 6, No. 1, January, 1964, pp. 65-84

36. Rehm, G; Eligehausen, R., "Bond of Ribbed Bars under High Cycle Repeated Loads," *ACI Journal*, V. 76, February, 1979, pp.297-309

37. Rosowsky, D., "Structural Reliability," Handbook of Structural Engineering, Chen, W.F. ed., CRC Press, Boca Raton, New York, 1997, pp. 26.1 – 26.39

38. Teng, S., Ma, W., Tan, K.H., and Kong, F.K., "Fatigue Tests of Reinforced Concrete Deep Beams," *The Structural Engineer*, V. 76, No. 18, September, 1998, pp. 347-352

39. Thomson, E.; Bendito, A.; Flórez-López, J., "Simplified Model of Low Cycle Fatigue for RC Frames," *Journal of Structural Engineering*, V. 124, No. 9, September, 1998, pp. 1082-1085

40. Ueda, T.; Okamura, H., "Behavior in Shear of Reinforced Concrete Beams Under Fatigue Loading," *Journal of the Faculty of Engineering*, The University of Tokyo, V. 37, No. 1, 1983, pp. 17-48

41. Ueda, T. and Okamura, H., "Behavior of Stirrup Under Fatigue Loading," *Transactions of the Japan Concrete Institute*, JCI, V. 3, 1918, pp. 305-318

42. Vecchio, F.J.; Collins, M.P., "The Modified Compression Field Theory for Reinforced Concrete Elements Subjected to Shear," *ACI Journal*, V. 83, No. 2, March-Apri, 1986, pp. 219-231