AN ABSTRACT OF THE THESIS OF

Lawrence Lyle Nolan for the M. S. in Chemical Engineering
(Name) (Degree) (Major)

Date thesis is presented Oct. 16, 1964

Title INCIPIENT BOILING AND BURNOUT HEAT FLUX FOR SUBCOOLED WATER FLOWING IN ANNULI CONTAINING HEATED CONCENTRIC WIRES

Abstract approved [redacted]
(Major professor)

Incipient boiling and burnout heat fluxes were studied for subcooled forced convection annular flow. Small wires varying from 0.010 to 0.020 inch in diameter were used as the inner core of the annulus and a one inch ID glass tube 24 inches long was used as the outer tube. This gave diameter ratios from 100:1 to 50:1. The water flow rate varied from 685,000 to 2,710,000 LBM/(hr. ft.^{2}) at a constant temperature of 208.4° F and a constant pressure of 18.7 psia. Alternating current was supplied to the wires, and the power required for incipient boiling and burnout heat flux measured. Incipient boiling heat fluxes varied from 70,200 to 254,000 BTU/(hr. ft.^{2}) while burnout heat fluxes ranged from 638,000 to 921,000 BTU/(hr. ft.^{2}).

For the range of operating conditions considered it was found that the heat transfer coefficient for incipient boiling was much less

than predicted by other investigators. Measured burnout heat flux agreed well with an empirical relationship developed by Weatherhead.

INCIPIENT BOILING AND BURNOUT HEAT FLUX FOR SUBCOOLED WATER FLOWING IN ANNULI CONTAINING HEATED CONCENTRIC WIRES

by

LAWRENCE LYLE NOLAN

A THESIS

submitted to

OREGON STATE UNIVERSITY

in partial fulfillment of
the requirements for the
degree of

MASTER OF SCIENCE

June 1965

APPROVED: [redacted]

Professor of Chemical Engineering

In Charge of Major

[redacted]

Head of Department of Chemical Engineering

[redacted]

Dean of Graduate School

Date thesis is presented October 16, 1964

Typed by Marion F. Palmateer

ACKNOWLEDGMENTS

My gratitude and thanks is extended to Dr. J. G. Knudsen for suggesting the course of this research project. All of his advice, encouragement, and support were deeply appreciated. Respectful gratitude is also given to the Department of Chemical Engineering, J. S. Walton, Head, for the use of its facilities. Great assistance was received from Mr. Robert Mang during the early part of this investigation for his criticism and suggestions concerning the experimental equipment. Also the Dow Chemical Company must be noted for providing a fellowship which supported the author during the course of his studies and research. Recognition must also be extended to my parents who gave me my initial interest and encouragement in my studies. Each and all of the above contributed in no small way to any success that the author may achieve. To all, I give a public and sincere thank you.

TABLE OF CONTENTS

LIST OF TABLES

LIST OF FIGURES

INCIPIENT BOILING AND BURNOUT HEAT FLUX FOR SUBCOOLED WATER FLOWING IN ANNULI CONTAINING HEATED CONCENTRIC WIRES

INTRODUCTION

With the advent of nuclear reactors for power generation, the study of heat transfer has received new emphasis. In order to insure the most economical operation of any thermal cycle, very high rates of heat transfer must be used, together with a large temperature difference at each end of the cycle. At the present time water is the most common heat transfer medium. In order to transfer the required amount of heat, the water is usually vaporized under high pressure at high rates of flow through the reactor. The fuel elements are usually arranged in bundles of long rods. The water is passed along the axis at very high flow rates and leaves the tube bundle as high quality, high pressure steam.

These high rates of heat transfer occur under nucleate boiling conditions. A limitation is reached when departure from nucleate boiling or burnout occurs, at which time there is a sudden drop in the heat transfer coefficient and a corresponding sudden rise in surface temperature, usually resulting in melting of the heat transfer surface. The sudden decrease in heat transfer coefficient is caused by a change from nucleate to film boiling.

This study describes an investigation of incipient nucleate boiling and of the boiling burnout phenomenon on a wire placed concentrically in a tube through which water flowed. Incipient boiling may be defined as the point at which vapor first appears at the heat transfer surface. Therefore, the present study considered the two extremes of the nucleate boiling region: minimum (incipient) boiling heat flux and maximum (burnout) boiling heat flux. The studies were carried out on very small wires to determine the effect, if any, of very high shear rates on high heat transfer rates for minimum and maximum heat fluxes.

For the present study there was no net generation of vapor. All the boiling was done with flowing subcooled water. Burnout heat flux and incipient boiling heat flux were measured for three different wire sizes at the different liquid flow rates. The water temperature and pressure were maintained constant at all times.

BACKGROUND AND THEORY

In the past several years there has been renewed interest in boiling heat transfer. Many studies have been concerned with the theoretical and experimental aspects of heat transfer. Considerable attention, however, has also been directed to the case boiling burnout or critical heat flux.

Boiling can occur in either a saturated or subcooled system, with natural or forced convection. A saturated system is defined as one where the bulk of the fluid is at the boiling point. In subcooled boiling only the fluid near the boiling surface is at the saturation temperature. The bulk of the fluid in this case is below the boiling point, hence subcooled. Natural convection boiling relies on the density differences between the vapor and liquid to move the fluid, while in forced convection the fluid is forced past the heat transfer surface. The present study was only concerned with subcooled forced convection boiling.

There are several regimes of boiling (2, 7). Figure 1 is a graph of the heat flux (q/A) from the heat transfer surface versus the temperature difference (ΔT) between the surface and the bulk of the fluid.

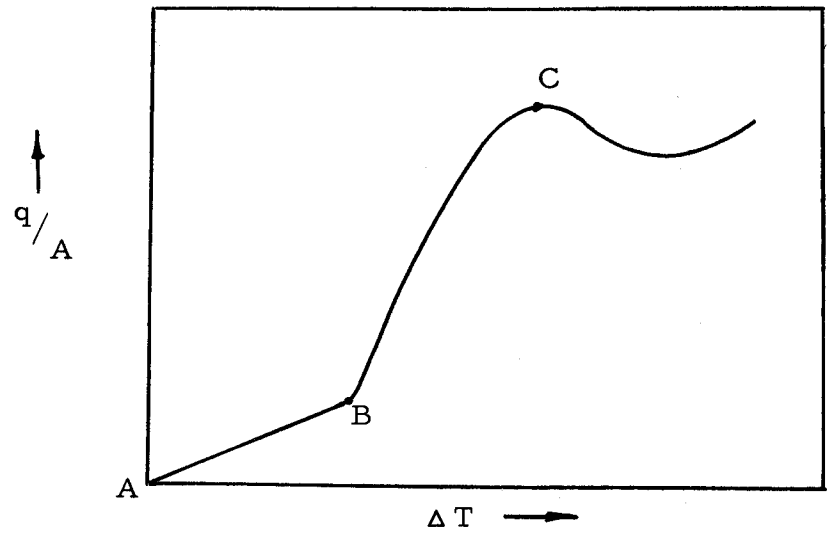

Figure 1. Boiling Curve

The region from A to B is the nonboiling convection region. At low values of ΔT, boiling does not occur and the only heat transfer is, essentially, by natural and/or forced convection.

In the second region, from B to C, nucleate boiling occurs. This is the region of special interest in the present study. Here, the first vapor forms at nucleation sites on the heat transfer surface. As the bubbles increase in size some leave the surface and are condensed when they reach the cooler fluid. In subcooled nucleate boiling, only the liquid adjacent to the heat transfer surface is hot enough to contain any vapor. Also in this region, only part of the boiling surface is covered with vapor at any given time. Subcooled nucleate boiling is also called surface boiling. This region of boiling is characterized by very high rates of heat transfer.

Point C marks the end of nucleate boiling and the beginning of film boiling. Point C is also known as the burnout point, or point of

critical heat flux corresponding to the peak heat flux that the heat transfer surface can ordinarily attain (2). This phenomenon occurs when the surface becomes blanketed with vapor bubbles and the result is a significant reduction in the heat transfer coefficient. Beyond point C the surface becomes covered with a vapor film. In order to transfer the required heat flux, the surface temperature increases.

The mechanism of boiling is not yet fully understood. Most observers (2, 7, 10) agree that the first vapor formation occurs when the liquid near the heat transfer surface slightly exceeds the saturation temperature. Also required is a nucleation site, usually considered to be some slight flaw or imperfection on the heat transfer surface. At this site a small bubble of vapor forms. Eventually it reaches sufficient size to overcome the pressure and surface tension forces and leaves the surface. When boiling takes place in a subcooled medium the vapor condenses as it leaves the region of superheated or saturated liquid.

A recent paper by Sato and Matsumura (10) presented a general correlation for the determination of incipient (i. e. the point where nucleate boiling begins) boiling for subcooled, forced convection flow. They considered boiling to start close to the heated surface, and assumed that the temperature of this surface was equal to the saturation temperature of the liquid. From a consideration of critical bubble size, assumption of a linear temperature gradient through the boiling

surface and using the well known McAdams correlation for forced convection heat transfer, they arrived at the following relationship

$$q/A = \frac{kH_{fg}}{80 J T_s V_{fg}} \left[\frac{D_e^{.2} \nu_o^{.8}}{.023 Pr_o^{.4} k_o} \frac{q/A}{U^{.8}} - \Delta Tsub \right]^2 .$$

Where the first term is evaluated at the saturation temperature, and the second term at the bulk temperature. This correlation does not take into consideration the geometric shape of the heat transfer surface.

After an extensive review of boiling heat transfer Jens and Lottes (4) developed a relationship to predict the wall temperature of a heat transfer surface at boiling. The given equation is based on data over a wide range of temperatures, pressures, and liquid flow rates. The heat flux, pressure, and degrees of subcooling are related by,

$$\Delta Tsub = 1.9 (q/A)^{1/4} e^{-P/900}$$

Two correlations were used to estimate the heat transfer coefficient at incipient boiling in annuli. Weigand (5, 12) recommended the following emperical relationship for systems with the Reynolds number greater than 100,000. All of the quantities are evaluated at the bulk temperature.

$$\left[\frac{hD_e}{k}\right]_b = 0.023 \left[\frac{D_e G}{\mu}\right]^{0.8} \left[\frac{Cp\mu}{k}\right]_b^{0.4} \left[\frac{d_2}{d_1}\right]^{0.45}$$

The second relationship used was proposed by Knudsen (6) for turbulent flow in annuli. This relationship was developed with special consideration given to the effect of shear stress at the wall. It may be considered to be a special form of the Colburn heat transfer-momentum transfer analogy. The j factor for heat transfer was defined in the usual way.

$$j = \left[\frac{h}{CpG}\right]\left[\frac{Cp\mu}{k}\right]^{2/3} = \frac{f}{2}$$

The friction factor for an annulus is different than that of a single pipe, and this is where Knudsen's derivation differs. For the inner wall of the annulus the friction factor is,

$$\frac{f}{2} = 0.023\ Re^{-.2}\left[\frac{1-a}{1-\lambda}\right]^{0.2}\left[\frac{\lambda^2 - a^2}{a(1-\lambda^2)}\right]$$

It is possible to calculate a heat transfer coefficient by combining the above two relationships.

The phenomenon of burnout has been extensively studied (2; 4; 7; 11). Burnout occurs when such a high rate of heat transfer is taking place that the material of the heat transfer surface no longer withstands the temperature necessary to maintain the large temperature drop between the bulk fluid and the surface.

McAdams made a series of measurements on burnout in subcooled forced convection systems (8). Measurements were taken on a stainless steel heating element in a glass pipe. The diameter ratio

between the heating element and its jacket varied from 0. 582 to 0. 325. Also the pressure of the system varied from 30 to 90 psia, while the flow rate covered 1 to 12 feet per second. The following correlation was found to describe the effect of velocity and liquid temperature on burnout.

$$q/A = 4 \times 10^5 (u)^{1/3} + 4800\ \Delta T sat\ (u)^{1/3}$$

Weatherhead, in a study for Argonne National Laboratory, considered earlier work on subcooled nucleate boiling in axial flow water systems and empirically derived an equation for burnout heat flux (11). Using the work of Jens and Lottes (4) as a starting point, and introducing new data, Weatherhead arrived at the following equation.

$$q/A \times 10^{-6} = \frac{3}{2} De^{-1/2} \left[\frac{H_{fg}}{10^3}\right] \left[\frac{G}{10^6}\right]^m \left[1 + \tanh\left(\frac{H_f - H}{100}\right)\right]$$

where $m = 0.175 \times 10^{-3} \left[\frac{H_{fg}}{V_{fg}}\right]$

The equation was developed using data taken from tube, channel, and annular flow systems over a wide range of pressures (200 to 3000 psia) and mass velocities up to five million pounds per hour per square foot.

EXPERIMENTAL EQUIPMENT

The test section consisted of a glass tube, one inch inside diameter and 24 inches long, with a concentric wire extending along its entire length. Water was pumped through the test section while alternating current power was used to heat the resistance wire.

The flow system is shown schematically in Figure 2. It consisted of a 20 gallon stainless steel steam jacketed holding tank (B) supplied with 5 psig steam from the laboratory supply. Water flowed from the tank to the suction of a Byron Jackson Deepwell Turbine Pump capable of delivering 135 gallons per minute at 30 feet of head (A). The pump was steel, while all other equipment was brass, glass, or stainless steel. The pump discharged either to the test section (D) or a bypass (C) depending on the flow rate required. One and one-half inch standard brass pipe was used throughout the system, except for the vertical test section which used a combination of one inch brass and glass pipe.

An orifice plate (D) located between the bypass and the test section was used to measure the flow rate. This plate was machined out of an one-sixteenth inch thick brass plate and had a diameter of 0.52 inches. Radius pressure taps were used to measure the pressure drop across the orifice plate. The upstream pressure tap was one pipe diameter from the face of the orifice plate, while the down

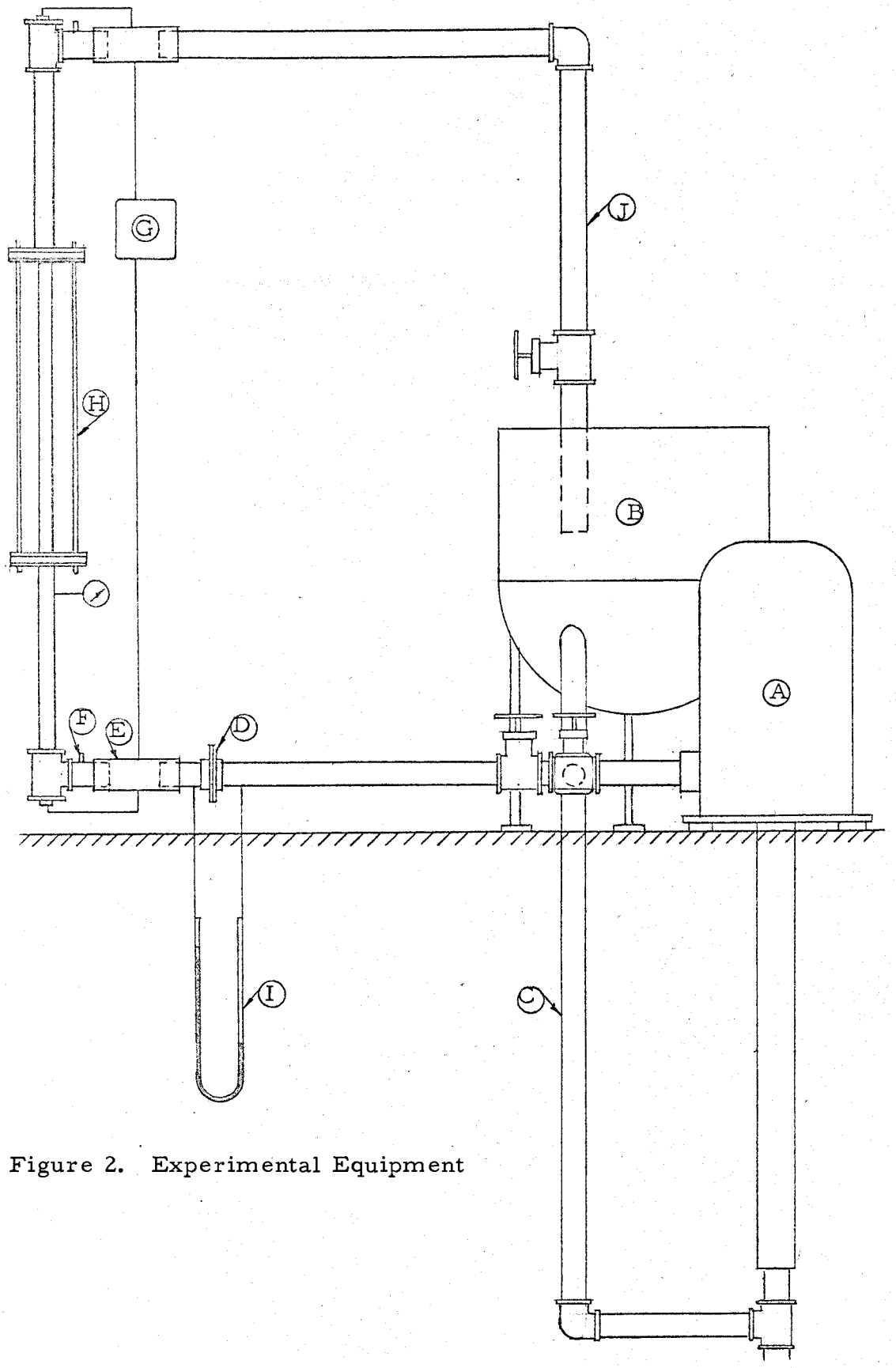

Figure 2. Experimental Equipment

stream pressure tap was one-half pipe diameter from it. One-quarter inch copper tubing was used to connect the pressure taps to a 30 inch differential manometer containing carbon tetrachloride under water (I). The manometer lines were designed so that all lines could be flushed with water while the equipment was operating.

Two thermometer wells (F) were placed in the one and one-half inch diameter pipe to measure the bulk temperature. One was placed just before and one just after the vertical test section assembly. These wells extended to approximately the center of the pipe. The thermometers used covered a range of 80-100° C and were marked off in one-tenth degree intervals. Rubber radiator hose (E) was used at both ends of the vertical test section assembly to connect it to the main piping of the rest of the system. The manometer lines were insulated in a similar fashion. This insulated the test section assembly from the rest of the system, which was grounded.

The discharge (J) emptied back into the holding tank.

Power was supplied to the resistance wire from a 0-220 volt variac (G) connected to the 220 volt, two phase, alternating current laboratory supply. A 0-2, 000 watt or a 0-5, 000 watt meter was connected between the variac and the heating wire. The watt meters were made by the W. M. Welch Company. Eight gauge copper wire carried the current from the watt meter to the test section connectors.

The test section consisted of a precision bore glass tube 24 inches long by one inch inside diameter (Figure 3 (a)). Brass flanges and spacing rods were used to secure the test section to the rest of the equipment. The flanges were five and three-quarter inches in diameter with nine holes drilled on a radius of two inches. The top flange (C) was one-quarter inch thick and had a hole cut in the center, one and fifteen-sixteenths inches in diameter, in order to allow the glass tube to pass through. The center flange (D) was one-half inch in thickness and was machined to receive the end of the glass tube on a lip one-quarter inch wide starting one-half inch from the center of the flange. On the opposite side of the center flange similar cuts were made to hold the resistance wire positioning bracket. The third flange (E) was like the first except that every third bolt hole was drilled three-quarter inches in diameter in order to allow the nuts on the second flange to pass through (I). Also, the third flange was silver soldered to an 18 inch length of one inch pipe (G). Gaskets were provided between the two flanges to insure a tight waterproof seal. The three flanges were bolted together by six one-quarter inch bolts one inch long (F).

A gasket and an "0" ring were used to secure a tight seal between the ends of the glass tube and the brass flanges (K). A rubber gasket was cut the same size as the lip on the center flange (D). This received the end of the glass tube. Also an "0" ring (one and

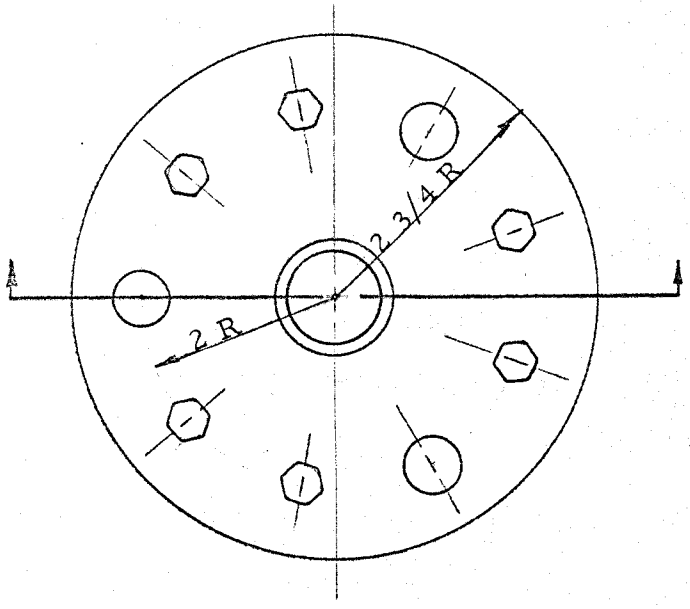

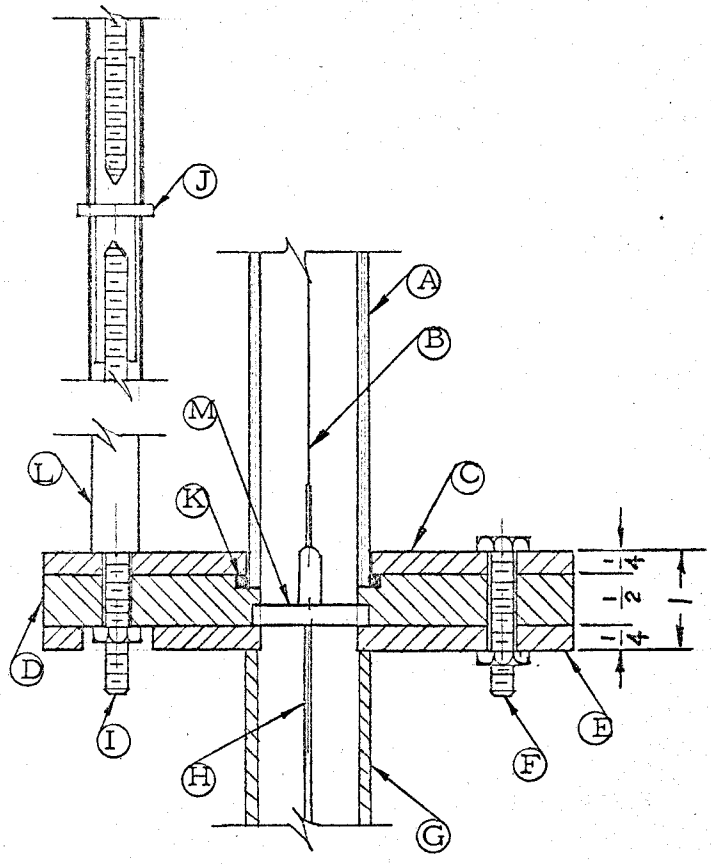

Figure 3. Test Section Assembly

one-quarter inside diameter by one and one-half outside diameter) was placed around the end of the glass tube and was held in place by the top flange. This provided a tight seal when the positioning rods (L) were tightened down and the flanges bolted together.

The three flanges were designed so that the glass tube (A) and flanges (C) and (D) could be removed from the apparatus as a unit. This made it unnecessary to handle directly the glass tube every time a new heating wire was installed. Also, it should be noted that the top half of the test section was electrically insulated from the bottom half. Plastic insulators (J) were made from Plexiglas* and inserted in the center of the three positioning rods.

The electricity was carried into the test section by one-eighth inch diameter copper rods (H). These rods were centered by the positioning bracket (M). The heating wire (B) was joined to the copper rod by a soft solder connection. Three wire sizes were used as heating elements: 30, 26, and 24 BWG. The chromel resistance wire was connected to the copper rods giving it a heating length of approximately 21 inches.

The copper rod-resistance wire-copper rod combination ran the length of the vertical test section assembly and passed through a special pipe-to-tube connector at each end (Figure 4). This connector

---

*Trade mark - Rohm and Haas Company.

consisted of a one-half inch brass pipe plug (A) drilled and tapped to receive a one-quarter inch brass pipe in a one-quarter inch tube connector (B). The tube connector was modified by lining it with a Plexiglas sleeve (E) to render it an insulator and to also insure a tight fit for the copper rod. When the brass hold-down nut (C) was tightened down on the rubber gasket (D), a watertight seal was made between the one-eighth inch copper rod and the top of the tube fitting. Two of these assemblies were made--one for the top and one for the bottom connection.

Brass was used to make the positioning bracket (Figure 2 (M) and Figure 5 (B)). This bracket consisted of a disc one and one-quarter inches in diameter with three streamlined spokes. The center of the bracket was drilled to receive a Teflon* insulator that held the copper rod in the center of the tube.

---

*Trademark - E. I. DuPont Company.

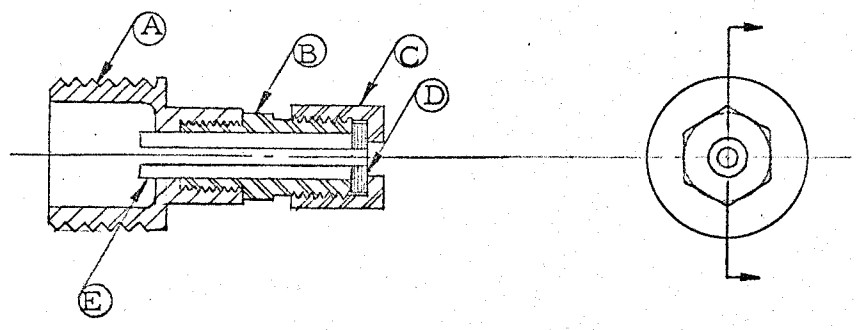

Figure 4. Connecter

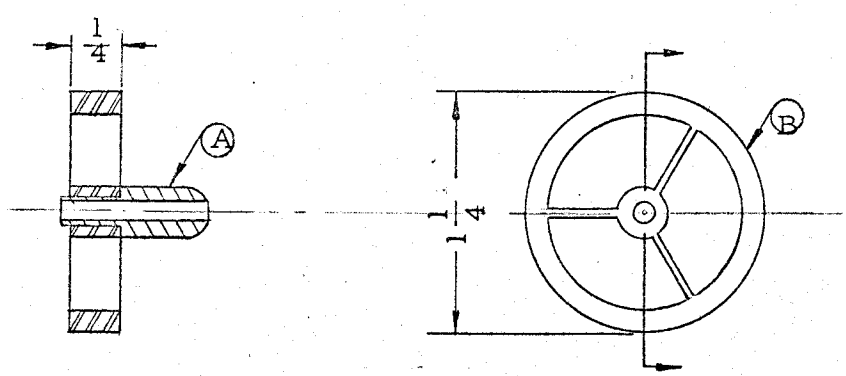

Figure 5. Positioning Bracket

EXPERIMENTAL PROCEDURE

The experimental procedure can be conveniently divided into two areas; making and inserting the resistance wire heating element into the apparatus, and the operating of the equipment itself.

The heating element consisted of a length of chromel wire connected to a one-eighth inch diameter copper rod. Three sizes of chromel wire were used as heating wires, 0.0100, 0.0159, and 0.0201 inch in diameter. These wires were cut to give a heating length of approximately 21 inches. In order to secure this wire to the copper rods, small knots were tied in the ends of the chromel wire. The copper rods were then cut along the diameter at the ends and the knotted chromel wire placed into the slit. By crimping the slit with the heating wire in place and soldering the junction, a tight connection was obtained between the two. Before placing the wire into the test section, the copper-chromel connection was streamlined by rounding off the edge with a file and emery cloth. The entire copper rod-chromel wire-copper rod assembly measured about 60 inches long.

In order to place the resistance wire assembly into the test section it was necessary to disconnect the test section assembly from the rest of the apparatus. The heating wire unit was then inserted through the top connector (Figure 4), and through the top positioning

bracket (Figure 5). It was then similarly lowered through the bottom positioning bracket and connector. The test section flanges were bolted together, after the rubber gaskets were aligned. The final step in connecting the heating wire was placing rubber gaskets on the connector and tightening the hold-down nuts. The heating wire was pulled tight by hand. Great care was taken to insure that the chromel wire was neither kinked nor stretched.

All experimental runs were made with tap water. The 20 gallon stainless steel holding tank was filled with water and brought to a boil. Standard procedure called for 15 minutes of vigorous boiling before the water was allowed to circulate. The holding tank valve was then opened, the pump turned on and the steam rate adjusted to maintain a bulk water temperature of 98.0°C entering the test section. During this time tap water was flushed through all the manometer lines in order to remove any air that might have been trapped. Water was also forced from the manometer lines into the pressure taps and the pipe itself. This insured air-free manometer lines. The flow rate was set by adjusting the by-pass and discharge valves to give a static pressure of four psig at the entrance of the test section, and also one of the three predetermined manometer readings. This was easily accomplished and temperature-flow equilibrium was usually attained in less than one-half hour. At this point a final adjustment was usually made on the heating wire assembly with respect to its positioning and

tightness.

Before making any measurement on boiling, a heavy black backstop was placed behind the test section in order to permit easy observation of water vapor release from the thin wire. This backstop extended the length of the glass tube and was marked off in one-half inch intervals. It enabled the observer to mark the location on the wire where boiling started and speeded up the time necessary to make a series of measurements. At this point the power was turned on and the water next to the wire brought up to boiling. The power was slowly reduced to the point where a faint stream of vapor was coming from one or more boiling sites on the wire. A slight decrease in power stopped boiling altogether. The point of incipient boiling was defined as the minimum power required to produce any vapor along the length of the wire. After this point was determined, the power was turned off completely and the system allowed to run several minutes before another boiling measurement was taken.

During the course of these runs, the bulk temperature of the water was carefully observed and adjustments were made from time to time in order to hold it constant. If the bulk temperature changed by more than one-tenth of a degree centigrade, boiling data were not taken, and adjustments were made to bring the temperature back to 98.0°C. A series of these boiling point measurements were taken until five or more agreed to within a few percent. This was usually

easily attained and seldom required more than seven or eight trials. The flow rate was then changed to a new value and the measurements repeated.

The final measurement was the determination of burnout heat flux. The power was increased slowly until the wire melted. Most of the wires glowed bright red for a length of an inch or more around the burnout point just before it melted. After burnout, the pump was turned off and a new wire inserted into the test section and another series of measurements made.

EXPERIMENTAL DATA

The data are presented in graphical and tabular form for incipient boiling heat flux and burnout heat flux as a function of the liquid flow rate. Wire diameter is a parameter. Also presented on the graphs are correlations for incipient and burnout heat flux as given by various investigators. The tables present all the data points obtained, together with the average values and the standard deviation from the average.

Figure 6 shows the average incipient boiling heat flux for three different wire diameters at three liquid rates. Also plotted are the results of the incipient boiling correlation as given by Sato. With each data point is given the calculated standard deviation as determined from several measurements of the same quantity and represented by a vertical line. In general, for any given liquid rate data from the smaller diameter wire lies above that of the larger wires. The one notable exception is the top most point of the 0.010 inch diameter wire. This point significantly deviates from the orderly progression of the other data points.

The results of the burnout measurements on the three wires at three liquid rates are presented in Figure 7. The data are compared with burnout correlations suggested by McAdmas and Weatherhead. As noted on Figure 6, the data from the smaller diameter wires lie

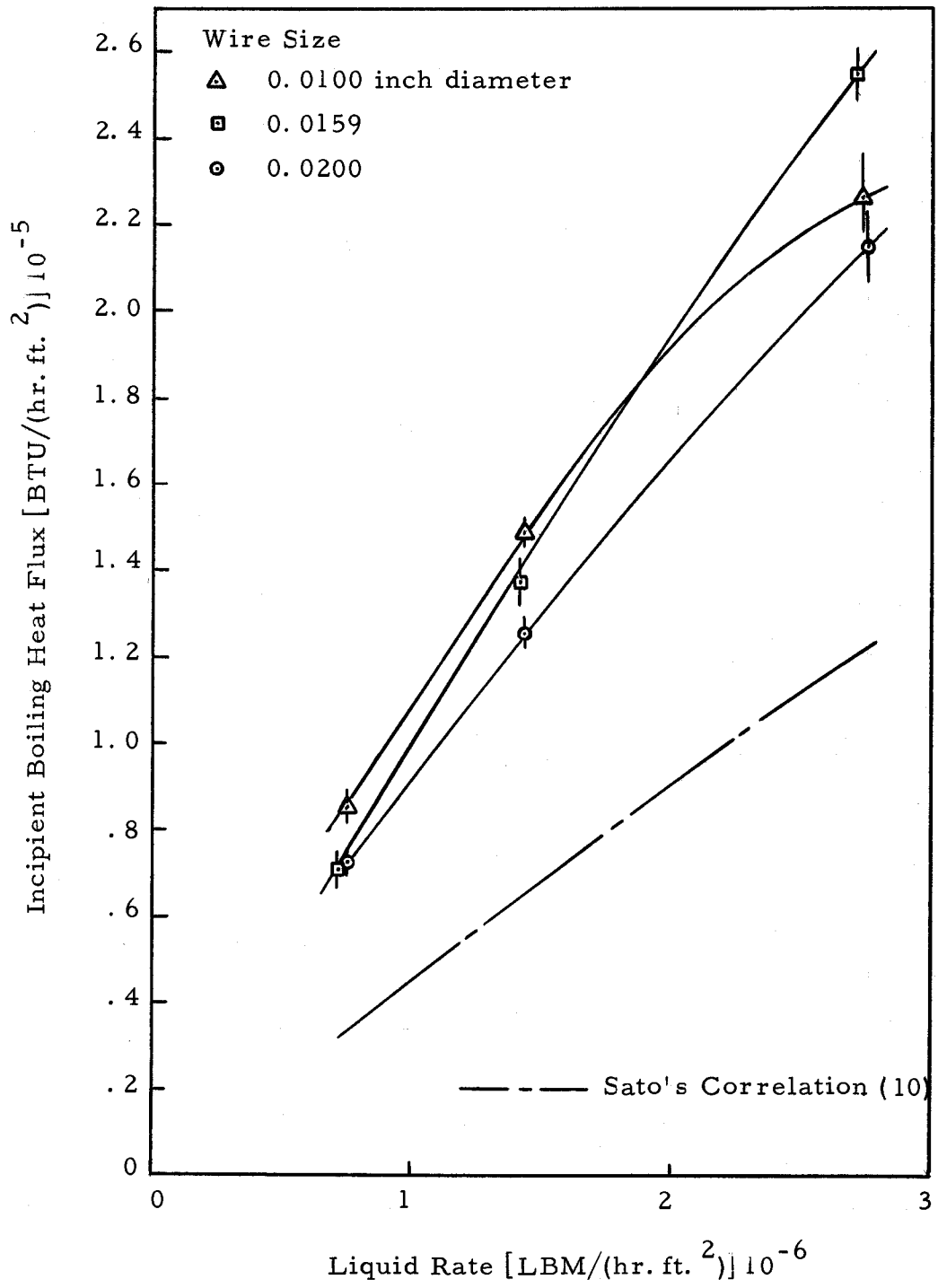

Figure 6. Incipient Boiling Heat Flux vs Liquid Rate

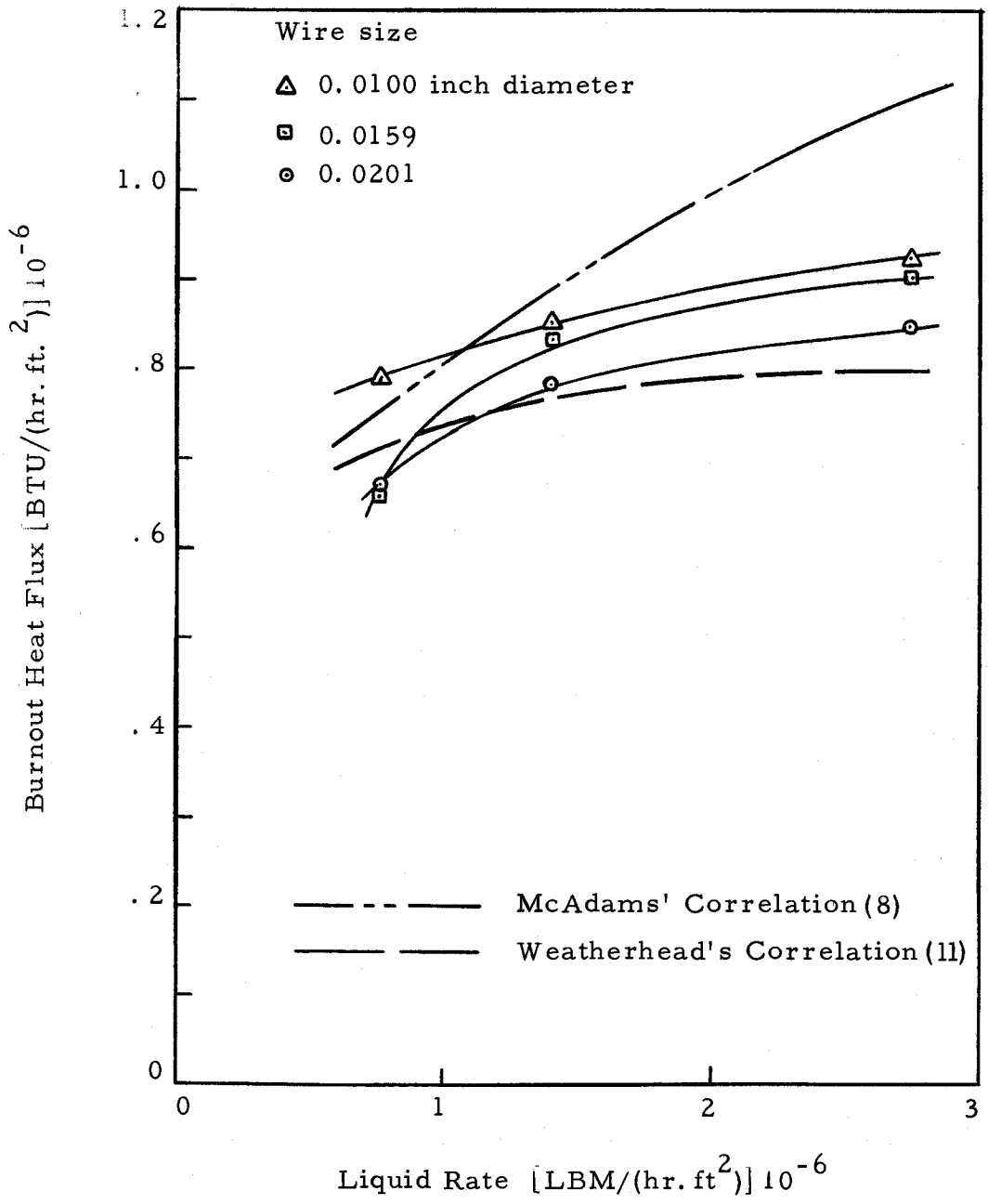

Figure 7. Burnout Heat Flux vs Liquid Rate.

above that of the larger wires.

Tables 1, 2, and 3 present the individual data points of the 30, 26, and 24 gauge wires respectively. For any given wire size and flow rate, the heat flux values obtained from several observations are averaged. The standard deviations of the average values are presented for incipient heat flux only. In order to keep all the data in an organized form, a simple, yet exact numbering system was devised. The letters A, B, and C represent the 30, 26, and 24 gauge wires respectively. The flow rates are noted by the numbers 1, 2, and 3 corresponding to water rates of 2, 710, 000, 1, 420, 000 and 685, 000 LBM/(hr. ft^2). As an example, run number 8-26-2, A-1 means: the run was made on August 26, 1964; it was the second run of the day with 30 gauge wire at a flow rate of 2,710,000 LBM/(hr. $ft.^2$).

Table 1. Data for 30 Gauge Wire.

Run Number	Incipient Boiling Heat Flux (BTU/hr. ft^2)	Burnout Heat Flux (BTU/hr. ft. ^{2})	Flow Rate (LBM/hr. ft. ^{2})
Series: A-1			
8-20-1	2.50×10^5		
8-26-1	2.35		
8-26-2	2.44		
8-27-1	2.17		
8-29-1	2.16	9.95×10^5	
8-30-2	1.86	8.02	
8-31-3	2.50	9.66	
Average	2.28	9.21	2.71×10^6
Deviation	0.09		
Percent Deviation	3.9		
Series: A-2			
8- 3-3		8.36	
8-20-1	1.53	----	
8-26-1	1.51	----	
8-26-2	1.51	9.00	
8-27-1	1.45	----	
8-30-1	1.45	8.28	
Average	1.49	8.55	1.42
Deviation	0.02		
Percent Deviation	1.3		
Series: A-3			
8-20-1	0.894		
8-26-1	0.795	7.25	
8-26-2	0.925	----	
8-27-1	0.849	8.55	
8-29-1	0.875	----	
8-30-1	0.800	7.85	
Average	0.856	7.88	0.685
Deviation	0.021		
Percent Deviation	2.5		

Table 2. Data for 26 Gauge Wire

Run Number	Incipient Boiling Heat Flux (BTU/hr. ft. ^{2})	Burnout Heat Flux (BTU/hr. ft. ^{2})	Flow Rate (LBM/hr. ft. ^{2})
Series: B-1			
8- 3-1	2.59×10^5		
8-10-2	----	9.30×10^5	
8-10-3	2.50	8.75	
8-10-4	2.72	8.63	
8-11-1	2.39	9.61	
8-24-1	2.59	----	
8-27-2	2.47	----	
Average	2.54	9.07	2.71×10^6
Deviation	0.045		
Percent Deviation	1.8		
Series: B-2			
8- 3-1	1.51		
8- 4-3	----	8.64	
8- 7-1	1.53	8.11	
8- 8-1	1.45	8.04	
8-15-1	1.20	8.48	
8-24-1	1.30	----	
8-27-1	1.40	----	
Average	1.40	8.32	1.42
Deviation	0.053		
Percent Deviation	3.8		
Series: B-3			
8-19-1	0.640	6.42	
8-19-2	0.665	7.25	
8-24-1	0.756	----	
8-29-2	0.746	6.01	
Average	0.702	6.56	
Deviation	0.029		0.685
Percent Deviation	4.1		

Table 3. Data for 24 Gauge Wire

Run Number	Incipient Boiling Heat Flux (BTU/hr. ft.^{2})	Burnout Heat Flux (BTU/hr. ft.^{2})	Flow Rate (LBM/hr. ft.^{2})
Series: C-1			
8-11-2	2.14×10^5	8.23×10^5	
8-12-1	2.00	7.73	
8-12-3	2.10	9.08	
8-12-4	2.06	8.52	
8-14-1	2.41	----	
8-17-1	2.05	----	
8-18-1	2.30	8.72	
Average	2.15	8.46	2.71×10^6
Deviation	0.070		
Percent Deviation	3.3		
Series: C-2			
8- 6-1	----	8.36	
8- 6-2	----	8.59	
8-12-1	----	7.10	
8-13-2	1.26	----	
8-13-3	1.21	6.60	
8-13-3	1.20		
8-14-1	1.36	8.32	
8-17-1	1.16	----	
8-18-1	1.32	----	
Average	1.25	7.79	1.42
Deviation	0.033		
Percent Deviation	2.6		
Series: C-3			
8-17-1	0.756	6.96	
8-18-1	0.776	----	
8-18-2	0.770	----	
8-19-2	0.665	7.25	
8-31-1	0.701	5.65	
8-31-2	0.733	6.69	
Average	0.734	6.38	0.685
Deviation	0.016		
Percent Deviation	2.2		

DISCUSSION

Of the two major areas of investigation, only the burnout heat flux results were as expected. The incipient boiling data, while somewhat scattered, cannot be predicted from any of the well known annuli heat transfer correlations. A comparison with experimental data of McAdams (8) and two correlations by Knudsen (6) and Wiegand (12) for heat transfer coefficients reveals that the incipient heat flux for the cases studied is significantly less than expected. Thus, the wires had unexpectedly low heat transfer coefficients.

The data for incipient boiling are presented in Figure 6 and Tables 1, 2 and 3. The incipient boiling heat flux is approximately a linear function of liquid flow rate, at least for the 26 and 24 gauge wires. It increases from 73, 400 BTU/(hr. ft.^{2}) at a liquid flow rate of 685, 000 LBM/(hr. ft.^{2}) to 215, 000 BTU/(hr. ft.^{2}) at 2, 710, 000 LBM/(hr. ft.^{2}) for the 24 gauge wire. The percentage deviations for the two heat fluxes are 2. 2 and 3. 3 respectively. The data for the 26 gauge wire are similar to that of the above, except that the heat fluxes are higher, discounting the lowest points which are essentially the same. The top point for the 30 gauge wire (point A-1) exhibits serious discrepancy with the remaining points. The deviation of this point is rather large (3. 9 percent) but not enough to account for its being so low. This point represents an average of seven experimental

measurements, none of which are as great as the average for the next larger size wire. It therefore cannot be discounted as a bad point. The problem may arise in the nature of the wire itself. Because it is such a small wire (0.010 inch in diameter), this point may signal a change in the boiling mechanism itself. At the present time no definite conclusions may be drawn.

As can be seen from the standard deviations, the data points at the high flow rates have a wider spread than the rest. This may be due to visual observation difficulties in noticing the first appearance of boiling. At this high flow rate (12.6 feet per second bulk average velocity) the vapor formed on the wire was quickly carried away. At lower flow rates (3.5 and 6.6 feet per second) this was not as great a problem.

The most significant finding of this study was the inability to predict the heat transfer coefficient of the wire at incipient boiling using correlations developed for annular flow. Because the wall temperature of the wire was not determined, an exact value of the heat transfer coefficient cannot be calculated from the measurements taken. But a good estimate can be obtained by combining the known bulk temperature with the correlation developed by Jens and Lottes (4) for predicting the temperature of a surface at incipient boiling.

The relationships developed by Wiegand (12) and Knudsen (6) were used to calculate a heat transfer coefficient at incipient boiling.

This should be identical with the heat transfer coefficient for non-boiling forced convection flow just before boiling starts. This is similar to the method used by Sato (10) in the development of his incipient boiling equation. Also heat transfer coefficients were taken from McAdams' study on subcooled surface boiling. In addition, heat transfer coefficients were calculated from the data taken using two different methods. The first assumed that the wall temperature at boiling was equal to the saturation temperature. The bulk temperature of the liquid was accurately measured. This gave a value for the minimum temperature drop at incipient boiling, and therefore gave the maximum value that the heat transfer coefficient could possibly have. The second method used the Jens' and Lottes' correlation (6) to predict the wall temperature, and this temperature was used in calculating the heat transfer coefficient. The results of all these calculations are presented in Table 4.

Considering the data at the maximum flow rate of 2,710,000 LBM/(hr. ft.^{2}), the maximum value that the heat transfer coefficient can have is 16,600 BTU/(hr. ft.^{2} °F). This is very much less than predicted by Knudsen and significantly lower than predicted by Wiegand. For all other flow rates calculated the wide discrepancy remains proportionately the same. A second estimate of the heat transfer coefficient is given in the second row of the table. This is probably a much more reasonable value. The correlation of Jens and

Table 4. Heat Transfer Coefficients for 30 Gauge Wire

Flow Rate $(\frac{LBM}{hr.\ ft.^2})$	2.71×10^6	1.94×10^6	1.51×10^6	0.97×10^6
Heat Flux $(\frac{BTU}{hr.\ ft.^2})$	2.6×10^5	2.0×10^5	1.5×10^5	1.0×10^5
Heat Transfer Coefficients (BTU/hr. ft. ^{2} °F)				
Maximum Possible Value:	16, 600	12, 700	9, 550	6, 370
Calculated Using Jens' and Lottes' Temp. Estimates:	4, 500	3, 630	2, 870	2, 060
From McAdams' Data:	4, 860	-----	2, 730	2, 000
Wiegand:	27, 800	21, 800	17, 200	11, 200
Knudsen:	43, 200	31, 900	24, 300	15, 700

Lottes was developed after carefully considering a wide range of data. The temperatures predicted closely agree with those measured by McAdams in his study (8). These coefficients are from five to ten times less than Knudsen's and about six times less than Wiegand's. If these heat transfer coefficients are used to calculate the heat flux for the wire an extremely large value is obtained--much in excess of even the observed burnout heat flux. Evidently the heat transfer coefficient for annuli of large diameter ratios (100:1 to 50:1) are much smaller than previously believed or predicted. McAdams' heat transfer coefficients compare favorably with those calculated from the

data using the Jens' and Lottes' equation to estimate the wall temperature.

The incipient boiling equation developed by Sato (9) is also plotted on Figure 7. His equation predicts an incipient heat flux 40 to 100 percent less than observed. This is not too surprising, considering that the original correlation incorporated a heat transfer coefficient derived from measurements for heating and cooling in tubes. Thus the effect of an annulus of the dimensions studied here is not readily apparent.

The burnout data, as presented on Figure 6 and in Tables 1, 2, and 3 are in good agreement with a general correlation determined by Weatherhead, and in fair agreement with a correlation offered by McAdams. There is a slight increase in burnout heat flux with increasing liquid rate, but it is much less than predicted from McAdams' correlation and greater than determined by Weatherhead's. Increasing the flow rate by a factor of three increased the burnout heat flux by 21 percent for the 26 gauge wire and 14 percent for the 30 gauge wire. The average maximum burnout heat flux obtained was 921,000 BTU/(hr. ft.^{2}) at a flow rate of 2,710,000 LBM/(hr. ft.^{2}).

Weatherhead's correlation was developed from careful consideration of a wide range of data, and should be more applicable than McAdams' which was developed from one set of experimental data. Thus, it is significant that Weatherhead's correlation is in better

agreement with the data obtained than McAdams'. As the equivalent diameter increases Weatherhead's relationship predicts a decrease in the burnout heat flux. The opposite effect was observed. Also the magnitude of the burnout heat flux-diameter relationship was found to be greater than that calculated by Weatherhead's correlation. This is understandable in view of the extreme diameter ratios used in the present study. Although the diameter of the wires varied two fold, the equivalent diameter used in the correlation only changed from 0.990 to 0.980 inches. Thus the effect of wire size was not stressed.

All the wire used in this study was examined under a 94 power microscope. The surface of all wires was found to have score marks from the dies. There was no apparent difference between the three wires in this respect.

CONCLUSIONS AND RECOMMENDATIONS

In summary, two statements can definitely be made: heat transfer coefficients at incipient boiling for annuli of large diameter ratios cannot be accurately predicted from existing correlations; burnout heat fluxes for the same annuli are, however, in good agreement with that calculated from existing correlations. The present relationships for estimating heat transfer coefficients place too great an emphasis on the diameter ratio. At very large ratios, such as used in this study, extremely large values of the heat transfer coefficient are predicted. These high coefficients are not substantiated by experimental evidence. On the other hand, the correlation of Weatherhead for burnout heat flux is quite applicable to annuli in the range studied.

Further work should be concentrated on the area of measuring heat transfer coefficients for boiling and non-boiling from wires of very small diameters located concentrically in annuli.

BIBLIOGRAPHY

1. Combustion Engineering, Inc. Steam tables; properties of saturated and superheated steam. 3d ed. Windsor, Conn., 1940. 38 p.

2. Eckert, E. R. G. and Robert M. Drake, Jr. Heat and mass transfer, 2d. ed. New York, McGraw-Hill, 1959. 530 p.

3. Hodgman, Charles D. (ed.) Handbook of chemistry and physics. 40th ed. Cleveland, Ohio, Chemical Rubber, 1958. 3456 p.

4. Jens, W. H. and P. A. Lottes. Analysis of heat transfer, burnout, pressure drop, and density data for high pressure water. Chicago, Ill., Argonne National Laboratory, 1951. 71 p. (ANL 4627)

5. Knudsen, James G. and Donald L. Katz. Fluid dynamics and heat transfer. New York, McGraw-Hill, 1958. 576 p.

6. Knudsen, James G. Note on j factors for turbulent flow in annuli. American Institute of Chemical Engineers Journal 8:565-568. 1962.

7. McAdams, William H. Heat transmission. 3d ed. New York, McGraw-Hill, 1954. 532 p.

8. McAdams, William H. et al. Heat transfer at high rates to water with surface boiling. Industrial and Engineering Chemistry 41:1945-1953. 1949.

9. Perry, John H. (ed). Chemical engineer's handbook, 4th ed. New York, McGraw-Hill, 1963. 2327 p.

10. Sato, Takashi and Hirohisa Matsumura. On the conditions of incipient subcooled boiling with forced convection. Bulletin of Japanese Society of Mechanical Engineers. 7:392-398. 1964.

11. Weatherhead, R. J. Nucleate boiling characteristics and the critical heat flux occurrence in subcooled axial flow water systems. Chicago, Ill., Argonne National Laboratory, March 1963. 34 p. (ANL 6675)

12. Wiegand, J. H. Discussion of paper by McMillen and Larson. Transactions of American Institute of Chemical Engineers 41:147. 1945.

APPENDIX

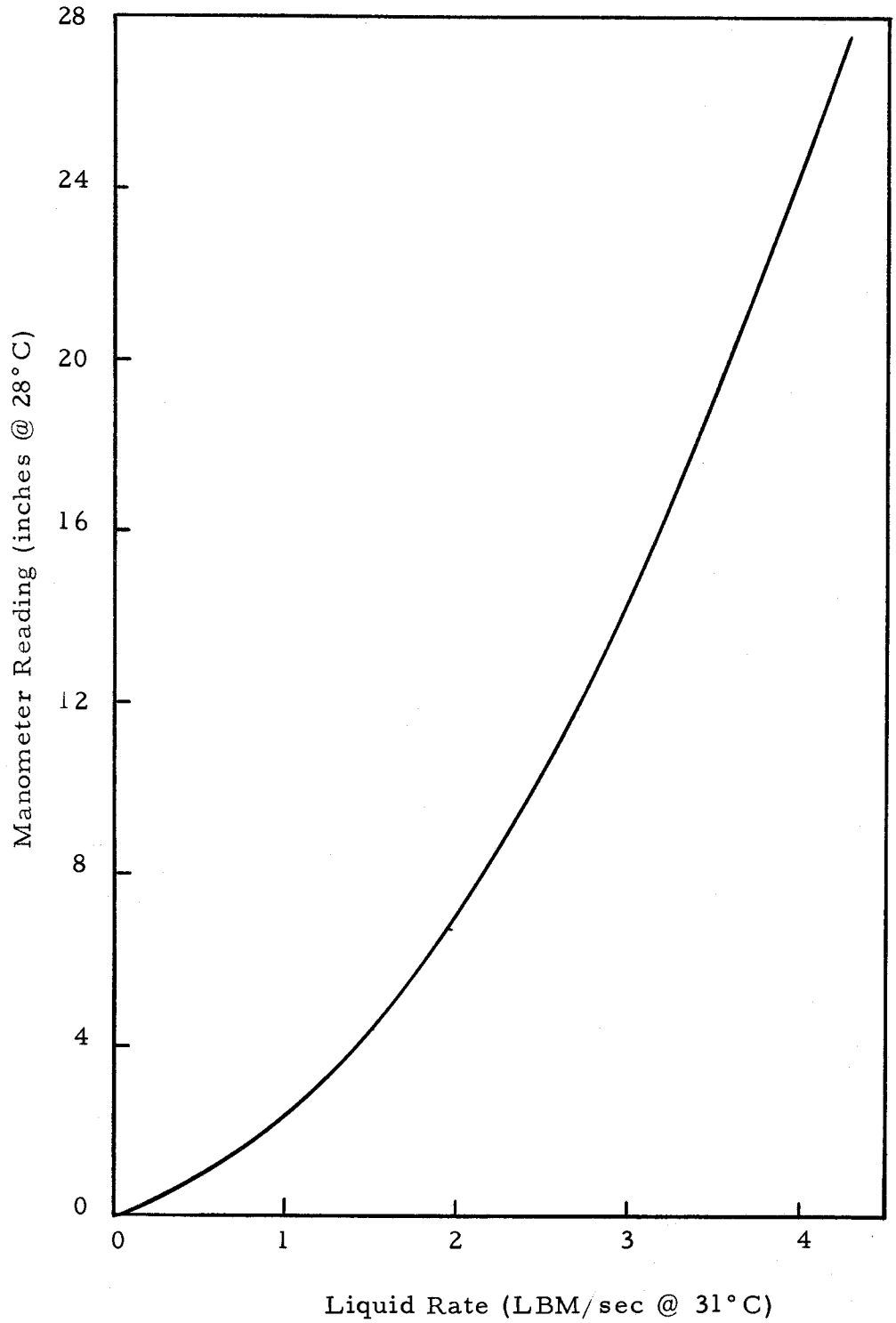

Figure 8. Orifice Calibration

NOMENCLATURE

Symbol	Definition	Units
a	diameter ratio d_1/d_2	
A	area	ft^2
Cp	heat capacity at constant pressure	$\frac{BTU}{LBM\ °F}$
De	equivalent diameter $d_1 - d_2$	ft
d	diameter	ft
f	Fanning friction factor	
G	mass flow rate	$\frac{LBM}{hr.\ ft.^2}$
h	heat transfer coefficient	$\frac{BTU}{hr.\ ft.^2\ °F}$
H	enthalpy of fluid at burnout	$\frac{BTU}{LBM}$
H_f	enthalpy of liquid	$\frac{BTU}{LBM}$
H_{fg}	enthalpy change of vaporization	$\frac{BTU}{LBM}$
j	j factor for heat transfer	
J	equivalent of heat	$\frac{BTU}{ft.\ LBF}$
k	thermal conductivity	$\frac{BTU}{hr.\ ft.^2\ °F}$
P	Pressure	$\frac{LBF}{in^2}$
Pr	Prandtl number, $\frac{Cp\mu}{k}$	
q	heat transfer rate	$\frac{BTU}{hr}$

Symbol	Definition	Units
r	radius	ft
r_m	radius at point of maximum velocity $r_m^2 = (r_2^2 - r_1^2)/[2 \ln (r_2/r_1)]$	ft
Re	Reynolds number, $\frac{DeG}{\mu}$	
T_b	bulk fluid temperature	°F
Tsat	saturation temperature	°F
Δ Tsub	degrees subcooling, Tsat - Tb	°F
u	bulk average liquid velocity	$\frac{ft}{sec}$
U	bulk average liquid velocity	$\frac{ft}{hr}$
V_{fg}	specific volume change on vaporization	$\frac{ft^3}{LBM}$

Greek Letters

λ	radius ratio, r_m/r_2	
μ	dynamic viscosity	$\frac{LBM}{ft.\ hr.}$
ν	kinematic viscosity	$\frac{ft^2}{hr}$
σ	surface tension	$\frac{LBF}{ft}$

Subscrips 1 and 2 refer to inner and outer wall of annulus respectively.