NEUROMUSCULAR RESPONSES OF SENIOR HIGH SCHOOL GIRLS

by

BERNICE ALMETA PETERMAN

A THESIS

submitted to

OREGON STATE COLLEGE

in partial fulfillment of
the requirements for the
degree of

MASTER OF SCIENCE

June 1958

APPROVED:

[redacted]

Professor of Health Education

In Charge of Major

[redacted]

Chairman of School Graduate Committee

[redacted]

Dean of Graduate School

Date thesis is presented July 31, 1957

Typed by Margaret Barber

ACKNOWLEDGMENT

The writer wishes to express her sincere appreciation to Dr. C. L. Anderson for his constructive criticism and guidance in the preparation of this thesis.

The writer also wishes to express her appreciation to the Waldport senior high school girls, Waldport, Oregon, for their willing and cooperative participation in the testing program of this thesis.

TABLE OF CONTENTS

CHAPTER		Page
I	INTRODUCTION	1
	Purpose of Study	7
II	APPARATUS AND PROCEDURE	8
	Apparatus	8
	Procedure	9
III	THE STUDY	25
	Introduction	25
	Tables of Results	25
	Stimulus and Response	26
	Handedness and Response	29
	Age and Reaction-time	31
	Flexion versus Extension	33
	Reaction-time to Choice	35
IV	CONCLUSIONS	39
	Stimulus and Response	39
	Handedness and Response	40
	Age and Reaction-time	41
	Flexion versus Extension	42
	Reaction-time to Choice	43
	General Study of Conclusions	44
BIBLIOGRAPHY		45

LIST OF FIGURES AND TABLES

FIGURES — Page

1 Neuromuscular Chronometer 11
2 Diagram of Neuromuscular Chronometer Circuit 12
3 Score Card 13

TABLES

1 9th Grade Response Time 14
2 10th Grade Response Time 15
3 11th Grade Response Time 16
4 12th Grade Response Time 17
5 Response Time of 14-year-old Girls 18
6 Response Time of 15-year-old Girls 19
7 Response Time of 16-year-old Girls 20
8 Response Time of 17-year-old Girls 21
9 Response Time of 18-year-old Girls 22
10 Comparison of Average Response by Grade Level 23
11 Comparison of Ranges by Age Groups 24

NEUROMUSCULAR RESPONSES OF SENIOR HIGH SCHOOL GIRLS

CHAPTER I

INTRODUCTION

All movements of the body are the result of muscular contraction, muscular tension or the force of gravity. Active muscular contractions cause the majority of all movements in which the arms, legs and body are raised or held in position against the force of gravity. Whenever a muscle receives a sufficient stimulus, the muscle contracts and resists relaxation. Gravity is a constant force pulling downward on all objects at all times. Whenever a muscle is stimulated, the contraction must be strong enough to overcome the downward force of gravity.

In performing movements or acts which an individual uses in everyday life, the person usually prefers to lead from one side of the body or prefers to use one hand rather than the other. Some of the one-sideness is due to heredity and some is due to social pressure or conditioning. Certain movements involving one-sided leads are subject to more environmental influence than others. Tuttle and Travis (16) conducted a study on a type of movement which was not greatly influenced by social pressure. They found that the precedence of lead in simultaneous contractions of the homologous muscle groups is determined largely

by the instructions given and the tasks involved. When the stimulus pattern to which the subjects respond is relatively complicated, the lead preferences are more strictly in harmony with the handedness of the subjects as indicated by ordinary manual activities of everyday life.

The time that elapses between the stimulus and the response to an observer may appear to be a very short interval but, except in a few instances, the time that has elapsed is long enough for many things to occur. For example: while driving a car, if an obstacle suddenly appears in front of the driver, the time it takes to apply the brakes may be a fraction of a second, but it also is long enough for the driver to crash into the obstacle.

In order to get a response from a given stimulus, the nerve impulses must arise in the receptors, travel along the efferent neurons, across a series of neuro-junctions, then to the efferent neurons and finally terminate in the motor end plates of the effectors, or muscles. Most resistance to impulses is set up at the synapse or neuro-junctions. In a more complicated movement, one impulse may be blocked by another impulse, which causes inhibition of the responses which will make the latent period of the responding muscles longer and be more variable.

When a stimulus only has one response, the reaction-time will be relatively short and have less time variability because it involves a relatively uninvolved neuro-muscular response, but when a stimulus response pattern involves a choice, the reaction time will be longer and exhibit greater variability. The more responses from which an individual must choose, the greater the number of neuro-junctions involved and the longer and more varied the time of response will be.

The problem of reaction-time first arose in the field of astronomy. History records that in 1796, an astronomer, working in the Greenwich Observatory in England, discovered that one of his assistants differed from him in his observation of the instant at which a star traversed a cross hair in a telescope. The assistant was subsequently dismissed and it was not until some twenty years later that the question presented here was ever taken up again. At that time, Bessel, a German astronomer, happened on a note reporting these facts in an observatory report. He decided to make a study of astronomers by testing them against each other. His results showed that no two persons agreed precisely on the time of a given transmit and that the discrepancies among them were due to more basic individual differences in manner of reaction rather than mere carelessness. Since these measurements depend upon the individual's speed of reaction, it was concluded that the

differences among observers had to be explained in terms of what came to be called the "Personal Equation"--constant individual differences in speed of reaction.

In the field of psychology where the study and measurement of reaction-time became quite important, Helmholtz (4), in 1850, first devised a reaction study method in an attempt to determine the speed of nerve conduction in sensory nerves. Wundt (18), as early as 1861, also had recognized the significance of individual differences. It was Donders (3), however, who first devised the compound reaction-time experiment for the study of mental or central processes, thus making it a realistic measurable psychological problem. His reaction experiments made use of two stimuli. In one method he required the subject to respond to one stimulus and to refrain from responding to the other. The difference in reaction-time between this method and that of the simple reaction method where only one stimulus is presented and the subject responds as soon as he is cognizant of it, Donders attributed to the time required to make the discrimination of the stimuli. In a third method where the subject is required to respond differently to each of two stimuli which may be presented, a still further increase in time was found. This further increase in time Donders attributed to the addition of "choice" to the discrimination problem.

Cartwright (2), in a study, plotted decision-time against a series of stimuli. By comparing the location of maximal time with the location of the stimulus which yields a relative frequency of 50 per cent, he found that an increase in length of decision-time is produced by a conflict between different responses and that such a conflict arises when a stimulus falls upon the border between two ranges of equivalent stimuli.

Jung (7), in working with what he called the Association Experiment, incorporated the reaction-time method as one means of studying "complexes." He postulated that in the cases where the stimulus words become associated with complexes there results an interference with the subject's associative processes. He found that such "complex indicators" could be recognized by extreme delays of response, peculiar types of responses, or no responses at all. In terms of an "associationist" theory of memory, reaction-time disturbances such as Jung found could then be accounted for easily by reference to the phenomena of conflicting associations of about equal strength. These initiate incompatible response tendencies that block any responses until such time as the subject can make a choice from among those response tendencies and proceed to execute what he himself considers to be the most appropriate response under the circumstances. It, therefore, appeared that all thought processes have a preparatory phase during which

time it is possible for the stimulus to make many associations. These may elicit a multitude of response tendencies from among which the subject exercises a sort of choice in the execution of a response. The extent to which the subject was or was not capable of avoiding the elicitation of incompatible response tendencies seems to determine the amount of times needed to make a response. Those subjects that were not able to carry out these processes readily were then assumed to have encountered conflicting associations which elicited incompatible response. It thus appeared to Jung that the intensity of the conflict touched upon by the stimulus word was a major factor in determining both the equality of the response and the delay of the response.

Rorschach (13), in his early research work with inkblot stimulus cards, called attention to the use of the time for first response to each card as an important indicator of the extent to which the perceptual processes of the subject are disturbed by the times may be attributed to extensive ideational productivity.

Physiologists have found many other factors that affect reaction-time. Karpovich (8) stated that the condition of the subject should be considered because fatigue slows down reaction-time. He also states that reaction-time has diurnal variations, the best time usually being obtainable in the afternoon. According to Atwell and

Elbel (1), age also should be considered because reaction-time is slower in younger children and gradually improves with age, reaching its maximum at the college age period.

Purpose of Study

With the knowledge of the history and the various studies made on reaction-time, it is clear that many factors influence and affect individual differences noted in reaction-time. This study of the 9th, 10th, 11th, and 12th-grade girls and the study of the 14, 15, 16, 17 and 18-year-old girls in the above grade levels are made to further the knowledge of factors that affect reaction-time. It is particularly designed to determine the speed of response at this particular grade and age level. This study is of special value in indicating a phase of neuromuscular maturation and thus be of value in determining age levels of neuromuscular development. By consolidating the results of this study with those dealing with other age groups it will be possible to establish a scale of reaction-time performance throughout the life span of the human.

CHAPTER II

APPARATUS AND PROCEDURE

The machine used for this study is the Neuromuscular Chronometer designed by Dr. C. L. Anderson, Oregon State College. The Neuromuscular Chronometer is designed to make time calibration of human responses to various stimuli. Time required for flexion and extension of the hands and arms, flexion and lateral movement of the legs, and extension of the lower leg can be measured precisely. Simple reactions without choice as well as those requiring a choice of response can be calibrated. Circuits are designed so that only the correct response will result in a recording.

The principle of operation of the chronometer is that a charged capacitor will always lose a definite percentage of its charge when it is connected across a resistor for a certain period of time. This device provides an electronic means of discharging a stable capacitor through a stable resistor for the duration of the time interval to be measured. The percentage of charge lost is accurately determined by a self-balancing potentiometer and this percentage is indicated by a mechanical pointer coupled to the potentiometer with a resulting rotation over a clock dial calibrated in units of time. All charging and discharging is accomplished through inertialess electronic

microswitches, thus permitting extremely short time intervals (.001 second) to be measured accurately. The total "lag" of the operation is calculated to be .003 seconds. Figure 1 shows the Neuromuscular Chronometer in operation.

Procedure

In administering the test, both the procedure and the explanation were consistent. Two subjects were in the room at the same time so that one could familiarize himself with the procedures before taking the tests. Stimuli were the same for every subject. Each subject used the green light and the bell for the right hand or foot and the red light and the buzzer for the left hand or foot. The time interval given between stimuli was varied between one and four counts. After the initial explanation, the subject was told to concentrate on the stimuli and turn off the stimulus by striking the appropriate key every time it came on. The subject was told that no further explanation would be given except instructions to change position for testing. There were no signals given such as "Ready" or "O.K.", whereby the subject could anticipate and thus out-guess the examiner. No attempt was made to catch the subject off guard or to fool her, but every attempt was made to keep from forming a pattern or routine in testing so far as stimuli were concerned.

It is recognized that the time of day may make a difference in reaction-time, but because of class scheduling, approximately one fourth of the subjects were tested in the morning and three fourths tested in the afternoon.

Figure 3 shows the score card used for testing. There are eight different positions using both light and sound. Two readings were taken for every test with the best reading used to compile statistics.

The test group consisted of 75 girls, 29 ninth-graders, 18 tenth-graders, 12 eleventh-graders and 16 twelfth-graders of the Waldport, Oregon, High School. These 75 girls were in age groups 14, 15, 16, 17 and 18. For purposes of this study the age by year was used without considering increments of months.

In terms of age groups, 14 were 14 years of age, 25 were 15 years of age, 17 were 16 years of age, 12 were 17 years of age, and seven were 18 years of age, which was the criterion used.

Figure 1
Neuromuscular Chronometer

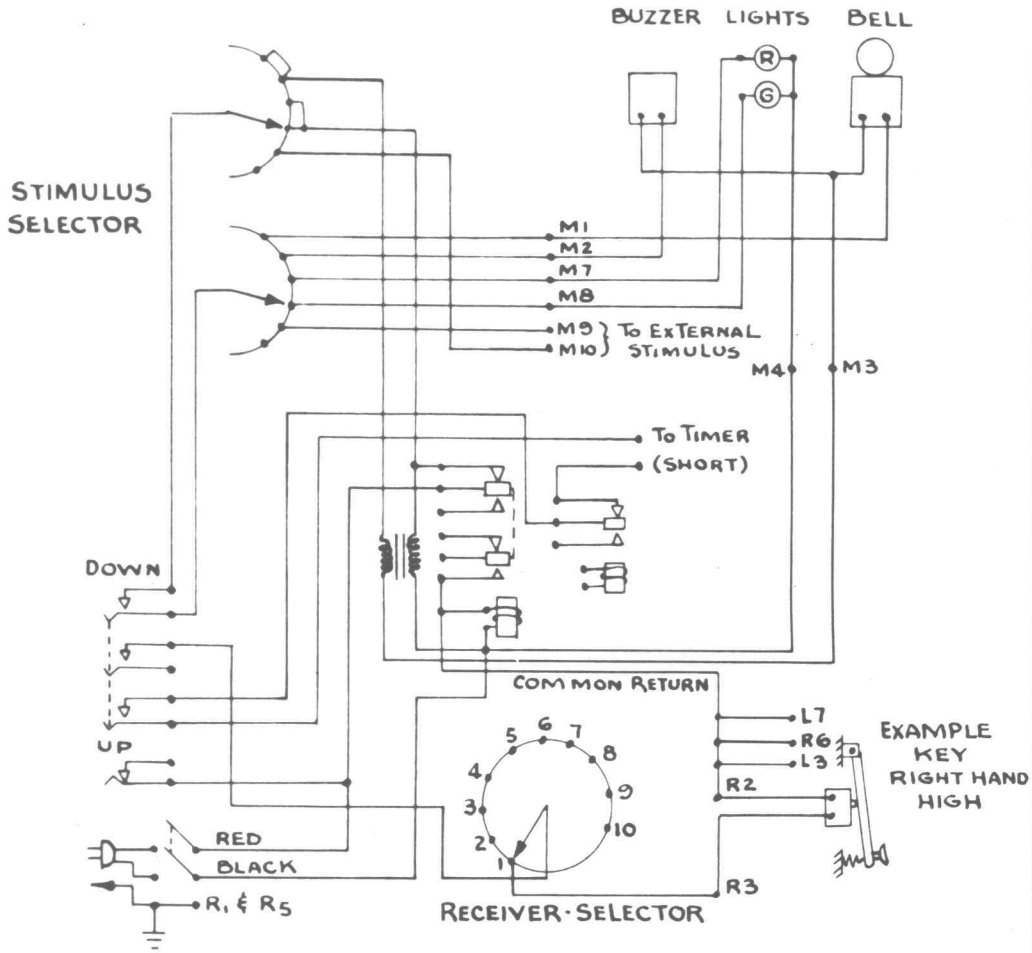

SELECTOR SETTINGS	TERMINAL IDENTIFICATION		
	STRIP "L"	STRIP "M"	STRIP "R"
1 Right Hand High	1 ∘ Right Knee Up	∘ Bell	∘ Ground
2 Right Hand Low	2 ∘ Right Knee Over	∘ Buzzer	∘ Common
3 Left Hand High	3 ∘ Common	∘ 12 V. Common	∘ Right Hand High
4 Left Hand Low	4 ∘ Left Knee Up	∘ 115 V. Common	∘ Left Hand High
5 Right Knee Up	5 ∘ Left Knee Over	∘	∘ Ground
6 Right Knee Over	6 ∘ Right Foot	∘	∘ Common
7 Left Knee Up	7 ∘ Common	∘ Red	∘ Right Hand Low
8 Left Knee Over	8 ∘ Left Foot	∘ Green	∘ Left Hand Low
9 Right Foot	9 ∘	∘ } External	∘
10 Left Foot	10 ∘	∘ } Trigger	∘

DIAGRAM OF NEURO-MUSCULAR CHRONOMETER CIRCUIT

Figure 2

NEURO-MUSCULAR RESPONSES
IN HIGH SCHOOL GIRLS

Name _____ Age (yrs) _____ (months) _____

Date _____ Height _____ Weight _____

Handedness R ____ L ____ Both _____

Test	LIGHT Right	Left	Choice	Test	SOUND Right	Left	Choice
Hand Flex				Hand Flex			
Hand Ext.				Hand Ext.			
Arm Flex				Arm Flex			
Arm Ext.				Arm Ext.			
Foot Ext.				Foot Ext.			
Leg Flex				Leg Flex			
Leg Ab.				Leg Ab.			
Combined Leg action				Combined Leg action			

Figure 3
Score Card

Table I
9th Grade Responses
Reaction Time to Light

	Green Right			Red Left			Choice Right			Choice Left			Wrong Choice	
	Hi	Lo	Ave	Hi	Lo	Ave	Hi	Lo	Ave	Hi	Lo	Ave	R	L
Hand Flexion	710	310	504	630	270	444	990	120	583	990	410	579	4 +1	1 +1
Hand Extension	630	310	449	600	150	393	910	340	536	850	300	537	0 +2	3 +3
Arm Flexion	820	410	627	890	260	603	910	580	705	990	480	723	1	1
Arm Extension	790	410	574	890	370	527	980	440	650	990	450	675	0 +1	0
Foot Extension	730	290	446	780	140	431	980	400	600	980	340	583	2	1
Leg Flexion	590	300	428	740	140	404	900	320	603	900	330	553	1	1 +1
Leg Abduction	710	330	459	690	310	451	950	350	635	880	330	562	0 +1	0
Combined Leg Action	900	440	665	900	440	644	990	400	799	990	420	814	1 +3	0 +5
													9 +8	7 +10

Reaction Time to Sound

	Bell Right			Buzzer Left			Choice Right			Choice Left			Wrong Choice	
	Hi	Lo	Ave	Hi	Lo	Ave	Hi	Lo	Ave	Hi	Lo	Ave	R	L
Hand Flexion	810	130	464	820	120	422	990	100	519	980	110	606	2 +1	5 +1
Hand Extension	700	120	457	680	140	436	970	290	588	990	100	551	1 +2	2 +1
Arm Flexion	850	460	618	750	430	577	990	490	695	980	460	735	2 +2	3 +2
Arm Extension	760	360	534	770	370	501	950	410	634	990	390	654	1	2
Foot Extension	820	120	452	800	280	416	910	350	543	930	320	627	0 +1	1 +1
Leg Flexion	560	140	408	940	260	459	990	300	583	990	340	590	1	3 +2
Leg Abduction	940	250	468	860	280	449	910	340	538	930	330	613	1	0
Combined Leg Action	990	380	627	990	390	590	980	430	693	990	520	775	0	6 +2
													8 +6	22 +9

Hi = High
Lo = Low
Ave = Average

Time = Thousandths of second
+ = Number of times clock ran full time

Table II
10th Grade Responses
Reaction Time to Light

	Green Right			Red Left			Choice Right			Choice Left			Wrong Choice	
	Hi	Lo	Ave	Hi	Lo	Ave	Hi	Lo	Ave	Hi	Lo	Ave	R	L
Hand Flexion	570	290	463	570	300	418	840	320	510	910	310	574	1	1 +1
Hand Extension	550	310	410	580	240	359	820	280	456	700	310	453	1	2
Arm Flexion	880	430	590	770	300	566	950	430	634	960	270	681	0	1 +1
Arm Extension	800	300	502	620	270	451	830	330	570	930	370	624	1	1 +2
Foot Extension	560	290	420	570	330	399	580	350	466	740	330	500	0	2
Leg Flexion	680	310	436	550	120	361	890	360	541	790	310	511	1	1
Leg Abduction	770	290	422	700	260	414	800	380	554	930	290	533	0	0
Combined Leg Action	840	450	588	920	400	582	960	430	653	980	510	711	0	1 +2
													4	9

Reaction Time to Sound

	Bell Right			Buzzer Left			Choice Right			Choice Left			Wrong Choice	
	Hi	Lo	Ave	Hi	Lo	Ave	Hi	Lo	Ave	Hi	Lo	Ave	R	L
Hand Flexion	900	140	428	590	140	374	800	240	483	910	340	577	1	3 +1
Hand Extension	740	220	375	740	210	379	900	230	490	910	430	651	1 +1	2 +2
Arm Flexion	750	290	500	730	310	529	930	450	596	990	480	792	0	0
Arm Extension	620	300	452	690	320	508	970	340	540	870	440	639	0	1
Foot Extension	530	260	340	560	120	352	670	280	452	990	320	591	1 +1	0 +1
Leg Flexion	580	280	440	550	240	393	860	280	527	910	380	611	1	0
Leg Abduction	590	260	393	670	270	391	750	300	509	730	240	513	1	1
Combined Leg Action	680	340	492	840	280	553	950	390	650	940	300	700	0 +1	0 +1
													5 +3	7 +5

Hi = High
Lo = Low
Ave = Average

Time = Thousandths of Second
+ = Number the clock ran full time

Table III
11th Grade Responses
Reaction Time to Light

	Green Right			Red Left			Choice Right			Choice Left			Wrong Choice	
	Hi	Lo	Ave	Hi	Lo	Ave	Hi	Lo	Ave	Hi	Lo	Ave	R	L
Hand Flexion	650	320	480	680	300	433	900	400	591	950	100	535	0	3
Hand Extension	540	300	405	420	240	358	910	330	560	960	300	560	3	0
Arm Flexion	820	530	660	790	430	583	940	480	679	830	440	693	0	0 +1
Arm Extension	780	320	503	590	320	478	880	440	660	880	460	640	0	0 +1
Foot Extension	950	340	480	620	350	460	900	350	524	960	470	657	0 +1	0
Leg Flexion	570	350	400	600	130	388	790	450	558	810	310	514	0	0
Leg Abduction	550	320	428	530	330	412	880	440	590	840	370	547	1	0 +1
Combined Leg Action	760	530	613	720	480	602	970	510	737	980	560	720	2 +1	0
													6 +2	3 +3

Reaction Time to Sound

	Bell Right			Buzzer Left			Choice Right			Choice Left			Wrong Choice	
	Hi	Lo	Ave	Hi	Lo	Ave	Hi	Lo	Ave	Hi	Lo	Ave	R	L
Hand Flexion	780	260	433	610	130	357	890	370	590	990	390	600	2	0
Hand Extension	490	230	392	700	270	380	990	360	625	840	310	530	0	2
Arm Flexion	630	420	537	880	430	570	970	490	670	990	450	801	0	1 +1
Arm Extension	640	270	447	710	230	444	820	400	563	930	420	619	2	0
Foot Extension	680	310	417	660	280	416	970	360	605	990	320	600	0 +1	0
Leg Flexion	540	300	392	460	270	392	650	300	440	900	280	500	0	1
Leg Abduction	700	290	407	750	250	349	980	410	622	970	320	535	0 +1	0 +1
Combined Leg Action	860	350	527	670	330	548	880	520	667	970	560	753	1	0
													5 +2	4 +3

Hi = High
Lo = Low
Ave = Average
Time = Thousandths of Second
+ = Number of times clock ran full time

Table IV
12th Grade Responses
Reaction Time to Light

	Green Right			Red Left			Choice Right			Choice Left			Wrong Choice	
	Hi	Lo	Ave	Hi	Lo	Ave	Hi	Lo	Ave	Hi	Lo	Ave	R	L
Hand Flexion	650	280	438	600	140	413	990	280	617	850	250	525	1	3
Hand Extension	630	240	422	520	120	348	940	140	485	990	280	595	0	0
Arm Flexion	940	490	612	710	430	568	960	570	718	930	450	640	0	0
Arm Extension	710	420	528	670	380	501	930	400	648	850	380	626	1 +1	0
Foot Extension	580	280	425	710	140	426	890	390	523	970	340	529	0	1
Leg Flexion	650	280	412	690	270	422	940	350	606	980	350	573	0	1
Leg Abduction	650	320	461	610	320	420	790	330	562	850	370	584	0	0
Combined Leg Action	980	370	641	880	310	624	990	470	803	990	430	758	0 +1	0 +3
													2 +2	5 +3

Reaction Time to Sound

	Bell Right			Buzzer Left			Choice Right			Choice Left			Wrong Choice	
	Hi	Lo	Ave	Hi	Lo	Ave	Hi	Lo	Ave	Hi	Lo	Ave	R	L
Hand Flexion	840	130	414	620	130	369	930	330	582	920	280	578	1	2
Hand Extension	800	140	434	700	220	387	700	250	510	990	150	550	0 +1	1
Arm Flexion	860	440	568	760	400	558	920	470	662	890	420	662	0 +1	3 +1
Arm Extension	870	330	488	690	360	466	870	380	550	850	370	637	0	1
Foot Extension	990	140	405	540	310	364	670	280	448	940	470	659	1	0 +1
Leg Flexion	830	140	426	700	290	420	880	290	503	880	350	520	0	0
Leg Abduction	630	330	417	670	270	425	990	260	640	860	140	555	0	0
Combined Leg Action	870	460	590	720	430	560	940	450	711	990	450	739	0 +2	0
													2 +4	7 +2

Hi = High
Lo = Low
Ave = Average

Time = Thousandths of second
+ = Number of times clock ran full time

Table V
Response time of 14 year old girls
Reaction Time to Light

	Green Right			Red Left			Choice Right			Choice Left			Wrong Choice	
	Hi	Lo	Ave	Hi	Lo	Ave	Hi	Lo	Ave	Hi	Lo	Ave	R	L
Hand Flexion	700	350	510	630	270	456	940	370	574	640	410	526	3 +1	0
Hand Extension	620	330	475	590	230	380	690	340	502	850	360	577	0	2
Arm Flexion	960	570	660	690	470	607	890	590	710	990	540	753	1	0
Arm Extension	740	410	560	890	370	551	830	440	633	890	450	663	0	0
Foot Extension	730	370	472	780	330	461	980	440	614	980	340	634	0	1
Leg Flexion	520	360	429	740	360	433	880	360	637	900	330	517	1	0
Leg Abduction	710	330	477	670	310	452	950	380	643	740	350	554	0	0
Combined Leg Action	880	530	680	870	530	662	990	570	826	990	650	717	+1 0	+2 0
													5 +2	3 +2

Reaction Time to Sound

	Bell Right			Buzzer Left			Choice Right			Choice Left			Wrong Choice	
	Hi	Lo	Ave	Hi	Lo	Ave	Hi	Lo	Ave	Hi	Lo	Ave	R	L
Hand Flexion	810	300	485	730	260	477	990	330	600	980	380	628	+1 1	3
Hand Extension	700	380	482	680	320	467	970	270	560	990	100	538	+1 0	+1 1
Arm Flexion	800	480	619	750	430	588	990	500	660	980	470	762	+2 0	2
Arm Extension	750	410	546	770	400	524	950	420	612	950	390	621	0	1
Foot Extension	820	360	498	800	340	456	910	360	552	890	390	600	+1 0	0
Leg Flexion	560	280	431	940	290	473	870	300	624	950	340	587	1	+1 1
Leg Abduction	790	250	449	860	320	497	780	340	522	930	330	657	1	0
Combined Leg Action	990	420	640	990	440	650	980	430	715	990	590	794	+1 0	+1 4
													3 +6	12 +3

Hi = High
Lo = Low
Ave = Average

Time = Thousandths of Second
+ = Number of times clock ran full time

Table VI
Response Time of 15 year olds
Reaction Time to Light

	Green Right			Red Left			Choice Right			Choice Left			Wrong Choice	
	Hi	Lo	Ave	Hi	Lo	Ave	Hi	Lo	Ave	Hi	Lo	Ave	R	L
Hand Flexion	710	290	458	620	290	425	970	370	565	910	310	563	1 +2	2 +1
Hand Extension	630	310	422	600	150	386	910	280	475	670	300	461	1	2
Arm Flexion	870	430	598	890	260	580	950	530	714	990	370	702	0 +1	2 +3
Arm Extension	790	300	538	700	270	485	980	330	628	990	370	673	1 +1	0 +1
Foot Extension	680	290	418	750	290	420	970	350	543	960	330	535	2	2
Leg Flexion	590	310	421	560	120	375	900	320	580	850	310	542	0	2
Leg Abduction	700	290	417	700	260	422	910	350	602	930	290	550	1 +1	0
Combined Leg Action	900	440	622	900	400	612	960	400	746	980	420	738	1 +2	0 +5
													7 +7	10

Reaction Time to Sound

	Bell Right			Buzzer Left			Choice Right			Choice Left			Wrong Choice	
	Hi	Lo	Ave	Hi	Lo	Ave	Hi	Lo	Ave	Hi	Lo	Ave	R	L
Hand Flexion	900	130	457	820	120	418	800	100	483	980	110	582	1	4 +1
Hand Extension	690	120	404	560	210	396	900	320	688	950	410	614	2 +2	2 +1
Arm Flexion	850	290	580	720	310	544	980	490	698	980	460	752	2	1 +1
Arm Extension	760	300	505	670	320	474	930	340	574	990	420	652	0	2
Foot Extension	730	120	407	700	120	386	840	280	506	990	320	638	0	1 +2
Leg Flexion	580	280	400	680	240	400	990	280	562	990	350	620	0	0 +2
Leg Abduction	940	260	447	670	270	410	910	300	514	920	240	553	0	0
Combined Leg Action	980	340	566	950	390	556	980	390	656	990	300	733	0 +1	2 +2
													5 +3	12 +9

Hi = High
Lo = Low
Ave = Average

Time = Thousandths of second
= Number of times clock ran full time

Table VII
Response Time of 16 Year Olds
Reaction Time to Light

	Green Right			Red Left			Choice Right			Choice Left			Wrong Choice	
	Hi	Lo	Ave	Hi	Lo	Ave	Hi	Lo	Ave	Hi	Lo	Ave	R	L
Hand Flexion	650	320	496	570	300	407	900	320	537	860	100	530	0	3
Hand Extension	540	300	395	450	150	317	910	330	574	790	300	470	3	1
Arm Flexion	820	430	629	650	300	554	940	430	662	870	270	661	0 +1	0 +2
Arm Extension	780	320	526	590	320	462	880	440	608	880	400	603	0	1
Foot Extension	950	290	447	620	140	428	770	350	477	960	430	647	0	0
Leg Flexion	570	300	421	600	130	368	660	390	524	810	310	536	0	1 +1
Leg Abduction	630	320	448	530	290	414	880	380	615	840	330	568	1	0
Combined Leg Action	760	470	595	720	480	579	970	430	690	980	560	740	2 +1	1
													6 +2	7 +2

Reaction Time to Sound

	Bell Right			Buzzer Left			Choice Right			Choice Left			Wrong Choice	
	Hi	Lo	Ave	Hi	Lo	Ave	Hi	Lo	Ave	Hi	Lo	Ave	R	L
Hand Flexion	530	260	410	610	130	336	890	370	587	990	340	556	2	1
Hand Extension	740	150	393	740	140	379	970	230	532	910	100	544	0	2 +1
Arm Flexion	620	410	509	640	430	528	970	450	714	990	450	785	0	1 +2
Arm Extension	640	270	446	570	230	415	970	400	573	870	420	637	3 +	0
Foot Extension	680	140	372	560	250	391	900	310	545	990	330	594	1 +2	0
Leg Flexion	540	140	378	530	260	380	650	280	460	900	280	459	1	2
Leg Abduction	700	280	454	750	250	394	980	370	570	970	280	545	1 +1	1 +1
Combined Leg Action	860	350	511	690	280	506	950	390	678	970	520	706	1	0
													9 +3	7 +4

Hi = High
Lo = Low
Ave = Average

Time = Thousandths of seconds
+ = Number of times clock ran full time

Table VIII
Response Time for 17 Year Old
Reaction Time to Light

	Green Right			Red Left			Choice Right			Choice Left			Wrong Choice	
	Hi	Lo	Ave	Hi	Lo	Ave	Hi	Lo	Ave	Hi	Lo	Ave	R	L
Hand Flexion	610	280	457	680	140	435	980	280	526	950	250	578	0	2
Hand Extension	630	290	455	580	270	400	940	140	470	960	280	545	0	0
Arm Flexion	940	490	670	790	430	600	860	550	723	930	450	687	0	0
Arm Extension	800	390	577	620	410	468	810	450	660	930	400	641	0	1 +1
Foot Extension	580	280	430	710	300	397	900	390	564	970	340	570	0 +1	1
Leg Extension	680	280	447	620	270	432	940	410	651	980	410	601	1	0
Leg Abduction	770	330	487	680	320	452	790	330	533	780	370	530	0	0
Combined Leg Action	980	560	693	920	530	647	990	470	778	940	490	753	0	0 +1
													1 +1	4 +2

Reaction Time to Sound

	Bell Right			Buzzer Left			Choice Right			Choice Left			Wrong Choice	
	Hi	Lo	Ave	Hi	Lo	Ave	Hi	Lo	Ave	Hi	Lo	Ave	R	L
Hand Flexion	780	130	415	610	130	396	780	330	540	920	280	620	2	1
Hand Extension	780	140	435	700	240	431	990	420	590	840	150	548	1	1
Arm Flexion	860	440	603	880	400	608	920	510	660	930	420	649	0	1 +1
Arm Extension	870	330	500	710	360	525	820	410	570	930	400	641	0	0
Foot Extension	990	220	448	660	330	423	610	280	458	930	320	610	1	0
Leg Extension	830	140	409	700	290	447	880	290	523	760	370	553	0	0
Leg Abduction	630	290	415	650	270	425	990	440	677	860	370	582	0	0
Combined Leg Action	870	480	597	840	490	598	940	520	700	970	510	780	0 +1	0
													4 +1	3 +1

Hi = High
Lo = Low
Ave = Average

Time = Thousandths of second
+ = Number of times clock ran full time

Table IX
Response Time for 18 Year Olds
Reaction Time to Light

	Green Right			Red Left			Choice Right			Choice Left			Wrong Choice	
	Hi	Lo	Ave	Hi	Lo	Ave	Hi	Lo	Ave	Hi	Lo	Ave	R	L
Hand Flexion	650	320	450	600	290	437	990	480	757	850	280	493	1	1
Hand Extension	530	240	404	440	120	323	600	400	486	990	340	660	0	0
Arm Flexion	770	490	586	700	440	557	960	670	783	920	470	669	0	0
Arm Extension	620	430	510	670	380	480	930	400	637	850	390	653	1	0
Foot Extension	570	310	440	660	140	453	570	400	469	670	380	489	0	0
Leg Flexion	500	330	390	690	290	414	740	350	554	830	350	520	0	1
Leg Abduction	560	320	429	490	320	374	740	510	587	850	470	588	0	0
Combined Leg Action	800	370	574	790	310	616	990	520	805	990	430	772	+1 0	+2 0
													2 +1	2 +2

Reaction Time to Sound

	Bell Right			Buzzer Left			Choice Right			Choice Left			Wrong Choice	
	Hi	Lo	Ave	Hi	Lo	Ave	Hi	Lo	Ave	Hi	Lo	Ave	R	L
Hand Flexion	840	200	452	620	140	381	990	430	657	730	330	540	0	1
Hand Extension	800	150	420	500	220	350	570	250	461	990	390	607	0	1
Arm Flexion	630	440	517	700	400	509	990	470	634	890	590	720	+1 0	2
Arm Extension	660	410	484	530	360	420	870	380	541	850	320	676	0	1
Foot Extension	510	140	356	390	310	347	670	320	493	940	490	689	0	1
Leg Flexion	750	270	440	510	300	391	620	320	441	880	350	527	0	0
Leg Abduction	490	330	396	670	290	446	820	260	580	690	140	496	0	0
Combined Leg Action	830	460	578	670	430	539	910	450	692	990	450	713	+1 0	0
													0 +2	6

Hi = High
Lo = Low
Ave = Average
Time = Thousandths of seconds
+ = Number of times clock ran full time

Table X

Comparison of Average Response by Grade Level

Average of Simple Response

Grade	9	10	11	12
Light	503	461	480	479
Sound	492	456	438	456

Average of Choice Response

Grade	9	10	11	12
Light	634	561	610	612
Sound	622	583	608	594

Table XI

Comparison of Ranges of Response by Age Groups

Simple Response to Light

Age	14	15	16	17	18
Average Highest	733	724	652	724	628
Average	517	475	468	503	465
Average Lowest	383	294	304	348	319

Simple Response to Sound

Age	14	15	16	17	18
Average Highest	796	763	650	773	631
Average	518	459	425	480	439
Average Lowest	355	239	248	293	303

Choice Response to Light

Age	14	15	16	17	18
Average Highest	886	927	869	916	854
Average	630	601	590	613	620
Average Lowest	432	346	361	376	428

Choice Response to Sound

Age	14	15	16	17	18
Average Highest	944	945	929	879	832
Average	627	614	593	606	592
Average Lowest	371	319	345	440	365

CHAPTER III

THE STUDY

Reaction-time, or the time elapsing between a stimulus and the resulting response, is of special importance to the well-being of man in the high-geared pace of the world today.

The rapid pace that is being established in everyday living, such as more and faster cars; supersonic aircraft; more power machines in homes, offices and industrial plants; sports events, such as swimming and track, makes reaction-time important in that a split second can mean the difference between winning and losing; safety or injury; and even life or death. It has become increasingly more important that we study reaction-time more thoroughly to discover the factors affecting reaction-time. This study deals with an investigation of certain neuromuscular responses of Waldport, Oregon, senior high school girls to further the knowledge of factors involving reaction-time.

Tables of Results

To present a clear picture of the data assembled, Tables 1, 2, 3 and 4 which represent the responses by grade; Tables 5, 6, 7, 8 and 9 which represent the responses by age, have been developed. In addition to average time, these tables also give the results in maximum

and minimum time intervals to indicate the range of reaction-time. Table 10, which represents the average response by grades to sound and to light, and Table 11, which represents the comparison of ranges to response by age groups have been developed. Averages were determined for the right and left hand and for right and left foot action with four different stimuli being used. Averages for choice were calculated for right and left hand and for right and left foot only.

Stimulus and Response

As was stated in the procedure, the green light was used for the right hand and the right foot action; the red light for the left hand and the left foot action. Results of both grade and age showed that no marked or distinguishing pattern was formed which would indicate that the green and red lights make any significant difference in response to light. The same results were noted in using the bell and the buzzer, with little or no difference in response to the two different sounds.

In a comparison of response to light and to sound by academic grades, a distinctive difference was discovered. It was revealed that response to sound was faster than response to light. Referring back to Tables 1, 2, 3 and 4 the high scores to light and to sound and the low scores to light and to sound reveals this difference. For the grade

levels, Table 10 presents a comparison of the average responses to light and to sound. In the 9th grade, the difference of the average scores to light and to sound was .011 seconds, or a two per cent faster response to sound than to light. For the 10th grade, the difference between the average scores was .005 seconds which was a one per cent faster response to sound than to light. The 11th-grade average responses revealed that sound responses were .042 seconds, or 10 per cent faster than light responses. The 12th-grade average responses revealed a difference of .023 seconds, or a five per cent faster response to sound than to light. The fastest reaction-time was made by the 9th and 10th-grade girls to sound. The 9th and 12th-grade girls recorded the slowest response time to sound. The range of times were greater in reaction to light than the ranges to sound response except for the 9th-grade level where the range for sound was greater than the range for light. However, the averages were lower to sound reactions in all four grades indicating the probability that these were extreme cases.

In referring back to Table 11, the comparisons of light and of sound at the different age levels, it was revealed that the response to light was quicker than to sound in terms of average highest reaction-time. However, the average lowest reaction-time and the average reaction-time

revealed that response time to sound was quicker than response time to light. For the 14-year-old girls, the difference between the average highest reaction-time to light and to sound was .063 seconds, or nine per cent faster to light than to sound. The average lowest reaction-time was .028 seconds, or eight per cent faster to sound than to light. The average reaction-time was .001 second or 0.2 per cent faster to light than to sound. The 15-year-old girls revealed a difference of .039 seconds, or a five per cent faster response time to light for the average highest reaction-time. The average lowest reaction-time was .055 seconds, or a 23 per cent faster response to sound. The average reaction-time revealed a difference of .016 seconds, or a three per cent faster response to sound than to light. The 16-year-old girls had a difference of .002 seconds, or a 0.3 per cent faster response to light than to sound for the average highest reaction-time. The average lowest reaction-time revealed a difference of .056 seconds, or a 23 per cent faster response time to sound than to light. For the average reaction-time, sound was .043 seconds, or 10 per cent faster than to light. For the 17-year old girls, the difference between the average highest reaction-time was .049 seconds, or a seven per cent faster reaction-time for light than for sound. The average lowest time revealed reaction to sound had a .055 second, or a

19 per cent faster reaction-time than did light. For the average reaction-time, the response to sound was .023 seconds, or five per cent faster than the response to light. For the 18-year-old girls, the average highest time was .003 seconds, or 0.5 per cent faster to light than to sound. The average lowest reaction-time was .016 seconds or five per cent faster to sound than to light. The difference between average reaction-time was .026 seconds, or a six per cent faster response to sound than to light. The 15 and 18-year-old girls recorded the fastest reaction-time to light. The slowest reaction-time was recorded by the 14 and 17-year-old girls to sound. The range of time was greater for sound reactions than for light except at the 16-year-old level, where the range of light was greater than the range of sound. The average highest reaction-time responses were faster to light than to sound, except for the 16-year-old girls where sound reaction was faster than that for light. The average lowest reaction-time and the average reaction-time responses were faster for sound than for light in all five age levels.

Handedness and Response

In grades 9, 10, 11 and 12, data revealed that the average reaction-time response in simple reflex movements of the left hand and left foot action to light and to

sound had a faster reaction-time than did the right hand and right foot action in all four grade levels. Using Tables 1, 2, 3 and 4, which show the responses of all four grades, the right hand and right foot action averages were compared to the left hand and left foot averages for light and for sound. In using the comparisons care must be taken not to compare one test with that of any other test because of the difference in distance required in making the movements. Comparison of the right and left in the same movement was the only valid comparison which could be made. Over-concentrating on the left hand, which was the opposite hand normally used, may possibly account for the left hand and foot action being faster than the right hand and foot action but this is mere conjecture.

The responses of the 14, 15, 16, 17 and 18-year-old girls recorded in Tables 5, 6, 7, 8 and 9, in simple reflex movements, revealed the left hand and left foot action in terms of average scores, had a faster response than the right hand and the right foot to both light and to sound. This again may be accounted for by an over-concentration of the left hand which was the opposite hand normally used.

Of the 75 girls tested, 69 girls were right-handed, five girls were left-handed and one girl used both equally well.

Age and Reaction-time

Data revealed that for the average reaction-time for the grade levels, Table 10, the 10th-grade girls had a faster reaction-time to light and the 11th-grade girls had faster reaction-time to sound. The greatest decrease in reaction-time to light occurred between the 9th and the 10th-grade girls, with a reduction of .042 seconds, or a nine per cent decrease in reaction-time at the 10th-grade level. The difference between the 10th and 11th-grade levels showed the 11th grade had an increase in reaction-time of .019 seconds, or four per cent over the 10th grade. The difference between the 11th and 12th-grade levels was .001 second, or a 0.2 per cent faster reaction-time for the 12th-grade girls. The reaction-time responses to sound revealed the greatest difference between the 9th-grade and the 11th-grade girls with the 11th-grade girls having a decreased time of .054 seconds, or a 12 per cent reduction in speed of reaction-time. The difference between the 9th and 10th-grade girls was .036 seconds, or an eight per cent decrease in reaction-time for the 10th-grade girls. The difference between the 10th and 11th-grade girls revealed that the 11th-grade girls had a reduction of reaction-time of .018 seconds, or four per cent. Data further revealed that the difference in response between the 11th and 12th

grade girls was an increase of .018 seconds, or a four per cent increase at the 12th-grade level.

In the study of age and reaction-time for the five grade levels, Table 11, data revealed that the reaction-time for the 18-year-old girls to light was faster than the 14, 15, 16 and 17-year-old girls. In sound, the reaction-time was faster for the 16-year-old girls. In calculating the differences, the average reaction-time to light and to sound was used. The greatest decrease in response time to light was between the 14 and 15-year-old girls. The 15-year-old girls had a decrease in reaction-time to light of .042 seconds or a decrease of nine per cent compared to the 14-year-old girls. The difference between the 15 and 16-year-old girls revealed a speed reduction of .007 seconds, or a one per cent decrease in reaction to light for the 16-year-old girls. The 17-year-old girls had a longer reaction-time of .035 seconds, or a seven per cent increase in reaction-time over the 16-year-old girls. The difference between the 17 and 18-year-old girls revealed a decrease in reaction-time for the 18-year-old girls of .038 seconds, or a decrease of eight per cent.

When sound was used, the reaction-time was less than that of light but the pattern formed was similar to that pattern formed by reaction to light. The difference between the 14 and 15-year-old girls was .059 seconds, or a

decrease in reaction-time for sound of 13 per cent for the 15-year-old girls. Between the 15 and 16-year-old girls, the 16-year-old girls had a decrease in reaction-time for sound of .034 seconds, or eight per cent. For the 16 and 17-year-old girls, the 17-year-old girls' reaction-time increased to .055 seconds, or an 11 per cent increase over that of the 16-year-old girls. The 17 and 18-year-old girls revealed a difference of .041 seconds, or a nine per cent decrease in reaction-time to sound for the 18-year-old girls.

The greatest decrease in reaction-time to light and to sound occurred between the 14-year-old girls and the 15-year-old girls. The least difference in reaction-time to light and to sound occurred between the 15-year-old girls and the 16-year-old girls.

Flexion versus Extension

Tables 1, 2, 3 and 4 revealed that hand extension had faster reaction-time than hand flexion. In all four grade levels, hand extension had a faster reaction-time to light and to sound stimuli except responses of the left hand to sound which revealed that hand flexion had a faster reaction-time in all four grades than did hand extension. The greatest difference between hand extension and hand flexion occurred at the 11th-grade level with a .075

seconds, or a 12 per cent decrease in reaction-time for hand extension. The least difference between hand extension and hand flexion reaction-time occurred at the 12th-grade level with a difference of .016 seconds, or a four per cent decrease in reaction-time for hand extension. The pattern formed indicated that movements involving hand extension would be more readily accomplished than those movements involving hand flexion.

In all five age levels, Tables 5, 6, 7, 8 and 9, hand extension revealed faster response times than hand flexion except for the 17-year-old girls' reaction time to sound, where hand flexion was faster than hand extension. The greatest difference of reaction-time occurred in the 16-year-old girls with .101 seconds, or a 26 per cent reduction in hand extension compared to 15-year-old girls. The least difference in response time occurred between the 16 and 17-year age levels with a reduction of .002 seconds, or 0.4 per cent to hand extension to light. The pattern formed indicated that movements involving hand extension sould be more quickly completed than those movements involving hand flexion.

Comparison of hand flexion and hand extension was the only feasible comparison which can be made because of various factors involved in the other tests. Arm flexion and arm extension involve different distances for the movement

in testing. In comparing foot extension and leg flexion other factors enter the picture, thus reducing validity of comparison. In flexing the leg, more muscles are used and require activation of more nerve patterns.

Reaction-time to Choice

Referring back to Table 10, the reaction-time involving movements of choice are longer than those movements not requiring choice. The average reaction-time to light and to sound for simple reflex movements and the average reaction-time to light and to sound for choice were used for comparison. For light, the range increases from .100 seconds, or 22 per cent, to .133 seconds, or 28 per cent over the initial movements. For sound, the range increases from .127 seconds or 28 per cent to .170 seconds, or 39 per cent over the initial movements. For light, the 10th grade revealed the least increase over the previous grade in reaction-time to choice and the 12th grade revealed the greatest increase in reaction-time to choice. For sound, the 10th grade revealed the least increase in reaction to choice and the 11th grade had the greatest increase in reaction-time to choice. Reaction-time to sound was faster than reaction-time to light even when there was a choice.

Referring back to Table 11, the data revealed that reaction-time where choice was involved was longer than when choice was not required. For the 14-year-old girls,

reaction-time to light requiring choice, the average highest reaction-time was .153 seconds, or 21 per cent longer than reaction-time for the simple reaction. The average lowest reaction-time for light was .049 seconds, or 13 per cent longer for choice reaction-time. The average reaction-time for light was .113 seconds, or a 22 per cent longer reaction-time for choice. For the 15-year-old girls, choice had a longer reaction-time of .203 seconds, or 28 per cent longer for the average highest reaction-time; .052 seconds, or 18 per cent longer for the average lowest time and .126 seconds, or 27 per cent longer for the average time than for the simple reaction-time. The 16-year-old girls had .217 seconds, or a 33 per cent longer average highest reaction-time for choice. The average lowest reaction-time was .057 seconds, or 19 per cent longer for choice than simple response time. For the average, choice had a longer reaction-time of .122 seconds, or 26 per cent longer than for the simple response to light. For the 17-year-old girls, the average highest reaction-time was .192 seconds, or 27 per cent longer for choice. The average lowest reaction-time was .028 seconds, or eight per cent longer for choice and the average reaction-time was .110 seconds, or 22 per cent longer for choice than simple response time. For the 18-year-old girls, choice had a longer reaction-time of .226 seconds, or 36 per cent longer

for the average highest reaction-time; .109 seconds, or 23 per cent longer for the average reaction-time than for the simple response.

The reaction-time of choice to sound also revealed a longer reaction-time than the simple response to sound. For the average highest reaction-time, the responses range from .106 seconds, or 14 per cent, to .279 seconds, or 43 per cent increase in reaction-time of choice over the initial simple response. For the average lowest reaction-time to sound, the responses range from .016 seconds, or five per cent, to .147 seconds, or 50 per cent increase in reaction-time of choice over the simple reaction-time. For the average reaction-time, the responses range from .109 seconds, or 21 per cent, to .168 seconds, or 40 per cent increase in reaction-time of choice over the simple response. Faster reaction-time to sound than to light was indicated for all five age levels.

An accurate account was kept of the wrong choices made. The left hand reacted to the stimuli for the right hand two times more than the right hand reacted to the stimuli for the left hand.

There were 68 instances of the clock running over one second in the grade levels and the age levels, indicating indecision in making a choice. However, there was never a wrong choice made on any of the readings. The incidence of

the clock running over one second was higher among the 9th-grade girls and among the 15-year-old girls.

CHAPTER IV

CONCLUSIONS

In Chapter I, the review of previous studies of reaction-time indicated the conclusions that had been drawn. With these as a basis from which to start, the data and comparisons made in Chapter III point out established conclusions and give further insight into the factors affecting reaction-time for senior high school girls. For clarity, the conclusions from this study, for reaction-time by school grade level and reaction-time by age level have been divided into five parts: 1. Stimulus and response; 2. handedness and response; 3. age and reaction-time; 4. flexion reaction-time versus extension reaction-time; and 5. reaction-time of choice responses.

Stimulus and Response

In the recording of responses by grade level, the data indicated that colors green and red in light did not make any significant difference in reaction-time to light. When sound was used, little or no difference in response time was indicated between the bell and the buzzer. When light and sound was compared, there was a definite pattern formed which showed reaction-time to sound had a faster response than reaction-time to light. From this it can be concluded that sound is a better stimulus than light. If faster

reaction-times are wanted sound should be used.

In response to light and to sound for the age levels, Table 11, data revealed that reaction-time to sound was faster than reaction-time to light for the average lowest reaction-time and the average reaction-time for all five age levels. The exceptions were the 14-year-old girls in average time where the response to light was .001 second faster than the response to sound. The average highest reaction-time had a faster response to light than to sound, except the 16-year-old girls, where response time to sound was .002 seconds faster than the response to light. From this it can be concluded that reaction to sound is faster than reaction to light. Where fast reaction-time is needed, sound should be used as the stimulus.

Handedness and Response

In grades 9, 10, 11 and 12, data revealed (Tables 1, 2, 3 and 4) that the average reaction-time responses in simple reaction of the left hand and left foot to light and to sound had a faster reaction-time than did the right hand and right foot action in all four grade levels. Further studies should be made to see if reaction-time actually is faster for the left hand or whether left-handedness is brought about by the over-concentration of the students on the left hand which was opposite to the hand normally used.

The responses at the several age levels (Tables 5, 6, 7, 8 and 9) in simple reactions, indicated that the left hand and left foot reaction-time to light and to sound was faster than that for right hand and right foot action. Further studies should be made to verify whether the reaction-time is faster for the left hand or whether left-handedness is brought about by the over-concentration of the students on the left hand which is not the one normally used.

Age and Reaction-time

In the introduction, reference was made to an earlier study that found age had a very definite effect on reaction-time and that in younger children it was slower and gradually improved as the individual became older, reaching its greatest speed at the college level. This study indicates that the 10th-grade girls had a faster reaction-time to light and the 11th-grade girls had faster reaction-time to sound than any of the other age groups. For reaction to light, the time decreases from the 9th to the 10th grade, increases from the 10th to the 11th grade and decreases from the 11th to the 12th grades. For reaction to sound, time of response decreased from the 9th grade to the 11th grade and then increased from the 11th to the 12th grade level. This study further indicates that age very definitely affects reaction-time.

In the study of the age levels, Table 11 revealed that reaction-time was longer for the 14-year-old girls with reaction-time gradually decreasing to the 16-year-old level. There was an increase in reaction-time at the 17-year-old age level, then a decreasing of reaction-time at the 18-year-old level. In response to sound, reaction-time was longer for the 14-year-old girls, decreased gradually to the 16-year-old age level, where the reaction-time to sound was faster than the other age levels; increases from age 16 to age 17 years and decreases from the 17 to the 18-year-old level. From this it can be concluded that reaction-time is related to chronological age.

Flexion versus Extension

Comparisons between simple flexion and extension were limited because of other factors that decrease the validity of comparison. The only comparisons made were between hand flexion and hand extension. For the four grade levels (Tables 1, 2, 3 and 4), data revealed that hand extension had faster reaction-time to light and to sound than hand flexion except responses of the left hand to sound in which hand flexion had a faster reaction-time than hand extension. Further studies of flexion and extension should be made.

For all five age levels (Tables 5, 6, 7, 8 and 9), hand extension had a faster reaction-time than did hand flexion

to light and to sound, except for the 17-year-old girls' response to sound in which reaction-time was faster for hand flexion than for hand extension.

Reaction-time to Choice

When the response requires a second factor, choice, the time required to respond is greatly increased. The 10th-grade girls recorded the fastest reaction-time with an increase in time of the response in the 11th grade followed by a decrease in response time at the 12th-grade level. Indecisions were higher at the 9th-grade level than the other three grade levels. Whether or not it is just indecision or whether the 9th grade girls wanted to be sure of their choice should be studied further. Wrong choices decreased with increase in grade level. The left hand reacting to the stimuli for the right hand is difficult to explain. An explanation could be that students who are right-handed over-concentrate on their weak hand or the left hand.

Data in Chapter III indicated that at the five age levels response to choice was longer than response to simple reaction. The 16-year-old girls recorded the fastest reaction-time to light and to sound. The reaction-time increased at the 17-year-old level followed by a decrease for the 18-year-old girls. It can be concluded that the

pattern formed indicates that the 16-year-old girls had a faster response time than 15-year-old girls, then an increase in reaction-time for the 17-year-old girls followed by a decrease in the reaction-time of 18-year-old girls. Further studies should be made to determine whether the response time will increase with age or grade or whether it will decrease with age or grade. Indecision was higher among the 15-year-old girls than for the other age levels.

General Study of Conclusions

The comparisons and the data point up one factor over others. This factor is that of age. The averages show this very markedly. As an overall conclusion, there is tangible evidence that individuals have a neuromuscular response age just as they have an intellectual, physical and chronological age. The individual differences in the various neuromuscular ages are just as varied as in the other ages. The study of this group reveals a levelling off of the neuromuscular age to be in the 10th-grade level and at the 16-year-old level. Only through further study will it be possible to establish ranges of neuromuscular response for every age group and for all types of neuromuscular reactions.

BIBLIOGRAPHY

1. Atwell, W. O. and E. R. Elbel. Reaction-time of male high school students in 14-17 year age group. Research quarterly 19:22. 1948.

2. Cartwright, D. Relation of decision-time to the categories of response. American journal of psychology 54:174-196. 1941.

3. Denders, F. C. La viterse des actes physiques. Archiv fur Anatomie, Physiologie und wissenshaftliche Medicine 657-681, 1868.

4. Helmholtz, H. U. On the methods of measuring very small portions of time, and their application to physiological purposes. The Philosophical magazine, London 6:313-325. 1853.

5. Hill, A. V. Living machinery. New York, Harcourt, Brace and Company, 1927. 306p.

6. Jenkins, Thomas Nichols. Facilitation and inhibition. New York, McGraw-Hill publishing company, 1926. 173p.

7. Jung, C. G. Studies in word association. London, William Heinemann, 1918. 343p.

8. Karpovich, P. V. Physiology of muscular activity. Philadelphia, W. B. Saunders Company, 1953. 340p.

9. Lapp, V. W. An analysis of movement on the basis of latent times and variabilities. Research quarterly, supplement 6:19. 1935.

10. Morehouse, Laurence E. and Augustus T. Miller. Physiology of exercise. St. Louis. The C. V. Mosby Company, 1948. 353p.

11. McGraw, Myrtle Bryan. The neuromuscular maturation of the human infant. New York, Columbia university press, 1943. 231p.

12. Rathbone, Josephine. Residual neuromuscular hyperextension, implications for education. Research quarterly 7:77-79. 1936.

13. Rorschach, H. Psychodiagnostics. Berne, Switzerland, Huber, 1942. 125p.

14. Salazar, John Anthony. Some correlates of reaction-time. St. Louis, Washington University, 1951. 65p.

15. Scott, Gladys M. Analysis of human action. New York, F. S. Crofts and Company. 1947.

16. Tuttle, W. W. and Lee Edward Travis. The relation of procedence of movement in homologous structure to handedness. Research quarterly, supplement 6:3-14. 1935.

17. Vogel, O. H. The relationship of dominance to acts of skill. Research quarterly, supplement 6:15-18. 1935.

18. Wundt, W. Grundriss der Psychologie. Lepzig, Alfred Krener Verlag, 1912. 373p.

19. Zoethout, William D. and W. W. Tuttle. Textbook of physiology. 11th ed. St. Louis, The C. V. Mosby Company, 1952. 692p.

20. _____. Decision-time in relationship to the differentiation of the phenomenal field. Psychological review 48:425-442. 1941.