AN ABSTRACT OF THE THESIS OF

David E. Elwood for the degree of Masters of Ocean Engineering in

Ocean Engineering presented on July 14, 2008.

Title: Evaluation of the Performance of a Taut-Moored Dual-Body Direct-Drive Wave Energy Converter through Numerical Modeling and Physical Testing

Abstract approved:_____

Solomon Yim

With energy prices rising and increasing concern about the influence of fossil fuels on climate change, wave energy systems are on the verge of commercial implementation. These first generation wave energy converters utilize either pneumatics or hydraulics to convert the mechanical energy of waves into electricity. For the last several years, the wave energy research group at Oregon State University has focused on increasing the efficiency of wave energy conversion systems by developing direct drive power take-off systems.

Beginning in the fall of 2006 an interdisciplinary team was tasked with designing and building a 1kW direct drive wave energy converter to be tested in the open ocean. Their device, the SeaBeavI, provided a proof of concept for a taught moored, dual body, wave energy conversion system using a linear generator for power take-off. To evaluate the performance of the SeBeavI system a method was developed to incorporate measured forces from the linear generator into a coupled model of the system. This thesis is comprised of one conference paper and two journal papers. The conference paper provides an overview of the design and construction of the SeaBeavI. The first journal paper presents an in-depth description of the physical testing and numerical modeling of the system. The second journal paper provides performance predictions for the device based on the combined numerical and experimental results.

# Evaluation of the Performance of a Taut-Moored Dual-Body Direct-Drive Wave Energy Converter through Numerical Modeling and Physical Testing

by

David E. Elwood

A THESIS

submitted to

Oregon State University

in partial fulfillment of
the requirements for the
degree of

Masters of Ocean Engineering

Presented July 14, 2008
Commencement June 2009

Masters of Ocean Engineering thesis of David E. Elwood presented on July 14, 2008.

APPROVED:

Major Professor, representing Ocean Engineering

Head of the School of Civil and Construction Engineering

Dean of the Graduate School

I understand that my thesis will become part of the permanent collection of Oregon State University libraries. My signature below authorizes release of my thesis to any reader upon request.

David E. Elwood, Author

ACKNOWLEDGEMENTS

First, I would like to thank the primeval atom, and the singularity from which it came, who's extremely improbable initial conditions have made life on this planet possible.

More directly, I would like to thank my parents for instilling in me the value of a formal education, but also understanding that not all lessons must be learned in the classroom. The long hours I spent building kayaks and sailboats with my father inspired me to study sailboat design which somehow led me to offshore renewable energy. My mother's support of my musical talents helped to hone my analytical skills and impress girls on backpacking trips. I'd also like to thank my grandparents and my uncle John who were generous enough to help fund my undergraduate education.

This thesis would not have been possible without the support of my fellow energy systems graduate students toiling away in the basement of Dearborn hall. I'd like to thank Ean Amon for helping to run experiments on the Linear Test Bed, Adam Brown for his proof reading, and John Yen for his help with error analysis. I would especially like to thank Joe Prudell for putting up with me through all the 16 hour days in sideways rain, and for letting me use the chain saw.

To all my friends here in Corvallis I want to thank you for making this one of the best places I've ever lived. I'd like to thank Laurie, Olivia, and James for being the best Craig's List roommates I could have ever imagined. I'd especially like to thank Emily Orling for her steadfast support through some of the hardest times of my life.

Finally I would like to thank my advisors Annette von Jouanne and Solomon Yim for their mentorship and support throughout my graduate studies. I would also like to thank the US Department of Energy for funding my research.

"I have never let my schooling interfere with my education" –Mark Twain

# CONTRIBUTION OF AUTHORS

Joe Prudell designed the linear generator for the SeaBeavI. Chad Stillinger, Adam Brown, and Dr. Bob Passch contributed to the mechanical design of the SeaBeavI system. Ean Amon and Dr. Ted Brekken assisted with data collection on the wave energy Linear Test Bed.

# TABLE OF CONTENTS

Page

# LIST OF FIGURES

Page

# LIST OF TABLES

Page

Evaluation of the Performance of a Taut-Moored Dual-Body Direct-Drive Wave Energy Converter through Numerical Modeling and Physical Testing

# 1 Introduction

## 1.1 A Brief History of Wave Energy Research and Development

Modern ocean wave energy research began during the oil crisis of the 1970s. Much of the early work was conducted in Europe by Salter (Salter 1976) and Evans (Evans 1979) in England and Falnes (Falnes 2002) and Budal (Budal 1977) in Norway, amongst others. Several promising concepts were developed by 1980 including point absorber wave energy converters such as the infamous Salter duck (Salter 1976) and oscillating water column (OWC) devices. Point absorbers extract energy from ocean waves by capturing the mechanical energy from the dynamic response of one or more floating bodies. If energy is extracted from a single degree of freedom (DOF) these devices can extract at most 50% of the wave energy (Evans 1979). Oscillating water column systems gather energy from the waves by converting pneumatic pressure generated by waves rising and falling in a sealed chamber into electricity. Electricity is generated by using the changing wave level to generate air flow through a nozzle driving a Wells turbine (Curran 1997). Early work was also conducted on the optimal control of wave energy devices (Budal 1977) (Falnes 2002). By controlling the power take-off the natural frequency of the system could be varied keeping the system in resonance with the wave forcing.

With the decrease in oil prices in the early 1980s, much of the funding for ocean wave energy conversion was cut and no full scale demonstrations of the technology were constructed. In the late 1990s, concerns about global climate change and the increasing price of conventional energy led to a resurgence in research on ocean wave energy conversion.

Currently, several commercial developers are working to build full scale, grid connected wave energy conversion systems. These include the Limpet oscillating water column, the Pelamis attenuating wave energy conversion system, and the Archimedes Wave Swing. In the United States, Ocean Power Technologies

(OPT) developed a point absorber wave energy conversion buoy for the US Navy that has been tested off Oahu, Hawaii. OPT has plans to deploy an array of point absorber buoys off the coast of Reedsport, Oregon representing the first grid connected wave energy conversion plant in the United States. Some of the current commercial wave energy concepts can be seen in Figure 1.1.

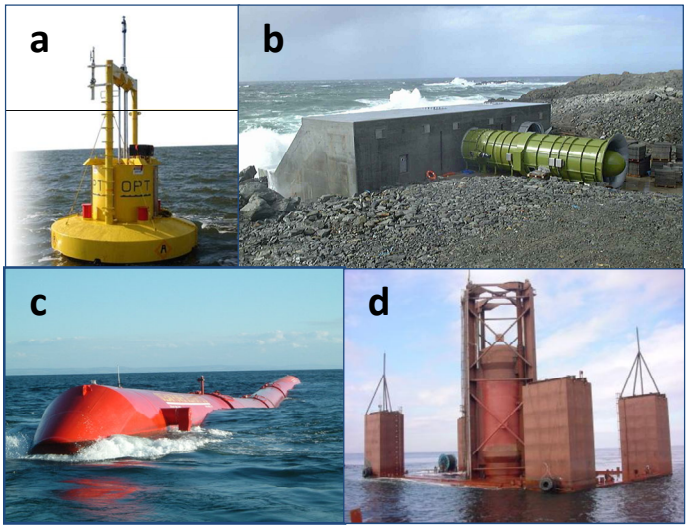


Figure 1.1 Current commercial wave energy conversion devices a) Ocean Power Technologies PowerBuoy™, b) Limpet OWC, c) Pelamis Attenuator, d) Archimedes Wave Swing

The PowerBuoy™ system developed by OPT is a dual body point absorber system with a hydraulic power take-off system (Ocean Power Technologies 2008). A deep draft spar is moored to the ocean bottom using a gravity mooring system with a heaving buoy coupled to the spar through a hydraulic cylinder. Limpet is a shore based oscillating water column device installed on the Isle of Islay off Scotland in 2001, becoming the first grid connected wave energy conversion system (WaveGen 2008). The Limpet system consists of a concrete chamber with a wells turbine generating up to 500kW of electricity. The Pelamis wave energy converter is composed of a series of cylindrical steel sections joined together by hydraulic rams producing pressure to power hydraulic generators. Three 750 kW Pelamis systems are to be installed off the coast of Portugal in 2008, becoming the world's first grid connected offshore wave farm (Pelamis Wave Power 2008). A bottom mounted wave energy converter, the Archimedes Wave Swing, converts

the relative motion between an air filled casing and a lower cylinder fixed to the bottom. A full scale demonstration of the AWS was completed in 2004 off the coast of Portugal (Archimedes Wave Swing 2008).

Most of today's commercial wave energy conversion devices use either hydraulics or pneumatics to convert the linear component of the motion of ocean waves into electricity. These intermediate power conversion systems reduce efficiency and increase the complexity of these systems. Recently, research has focused on the development of more efficient direct-drive power take-off systems. Substantial research has been conducted on linear generator technology for use in wave energy conversion systems (Mueller 2002). Such technologies have already been implemented in bottom mounted wave energy conversion systems (Ivonova 2005) (Polinder 2004).These next generation wave energy conversion technologies have the potential to increase efficiency and reduce the cost of energy, potentially making ocean wave energy cost competitive with other types of renewable energy.

## 1.2 Previous Work at Oregon State University

Since 2000, innovative direct drive generator technologies have been developed for use in wave energy conversion by the Wallace Energy Systems & Renewables Facility at Oregon State University. These direct drive generators use electro-magnetic coupling to convert the linear motion of ocean waves into electricity. By directly coupling the relative motion between a pair of floating bodies without intermediate hydraulics or pneumatics the electrical generation efficiency can be increased and the overall system simplified.

Research has been conducted on the coupled modeling of the hydrodynamic and electro-magnetic systems in support of the design of these direct-drive wave energy concepts. By combining simplified models of the generator systems with computational fluid dynamics, the effect of the power take-off system on the system response can be determined. Once an efficient coupled model has been developed, the entire system can be optimized to maximize energy output and minimize the cost of energy.

### 1.2.1 Permanent Magnet Linear Generator System

One of the potential direct-drive wave energy conversion systems incorporates a permanent magnet linear generator housed within a single heaving buoy. The system consists of a permanent magnet field system mounted on a central shaft, coupled to the floating buoy via a spring and an armature rigidly connected to the buoy structure. The central shaft is moored to the seafloor and the buoy is free to heave. The relative motion created by the heave displacement between the central magnetic shaft and the armature induces voltage in the armature (Rheinfrank 2006).

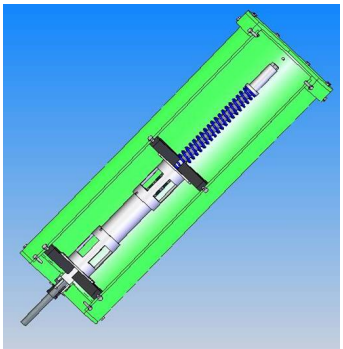

Figure 1.2 Solid Model of Single Buoy Permanent Magnet Linear Generator Wave Energy Conversion System

The translator shaft consists of an assembly of high permeability steel pole tip pieces designed to allow for the flow of magnetic flux and high field strength neodymium-iron-boron magnets with their poles placed in opposition to concentrate the available flux. Lamination steel is then wrapped around the two-phase armature coils to provide the flux return path through the generator. Figure 1.3 shows a partial cross section of the generator magnetic circuit.

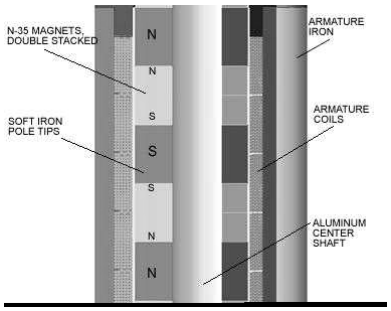


Figure 1.3 Partial Cross Section of Linear Generator Magnetic Circuit

### 1.2.2 Contact-less Force Transmission System

Another potential direct drive generator solution is a contact-less force transmission system (CFTS) utilizing a ball screw driving a conventional rotary generator. The contact-less transmission uses magnetic fields to transfer thrust from an outer buoy to a central spar without any direct mechanical coupling. This approach minimizes the number of moving parts and decreases energy loss in the force transmission (Agamloh 2006).

The solid model of the system is shown in Figure 1.4 with components such as the CFTS, ball screw, and ball nuts displayed in the section view. The system comprises an outer float enclosing a ferromagnetic cylinder which slides against an inner spar that contains the power take-off components. The inner and outer bodies are independently sealed, increasing the survivability of the system. The force on the outer cylinder is transmitted through the wall of the inner module to the ball nut by the magnetic fields of the CFTS.

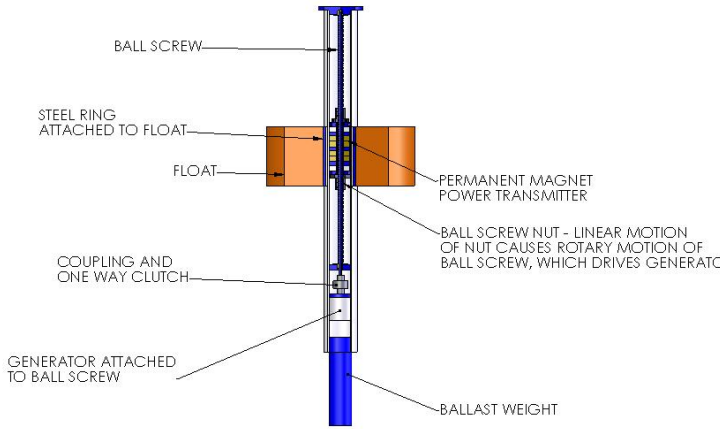


Figure1.4 Solid Model of Contact-less Force Transmission System

The CFTS is a tubular ferromagnetic reluctance device of two components. The first component consists of neodymium-iron-boron (NdFeB) magnets which are axially magnetized and configured in a "piston" with two opposing poles squeezing magnetic flux radially. A central pole piece constructed of a back-iron "cylinder" is mounted on the buoy. The reluctance force that is developed when

the buoy moves up and down is transmitted to the piston through the magnetic field between these two components.

A ball screw consists of a shaft with an inclined threaded groove and a nut that is concentric to the shaft with the nut containing small cylindrical steel balls (see Figure 1.5). Traditionally ball screws are used to convert rotational motion to linear motion. By spinning the shaft in either direction, the nut moves linearly up or down the length of the shaft, thus converting rotary to linear motion in a process called forward driving. Alternatively, as the nut is pulled up or down, the shaft rotates in the clockwise or counterclockwise direction respectively, thus converting linear to rotary motion.

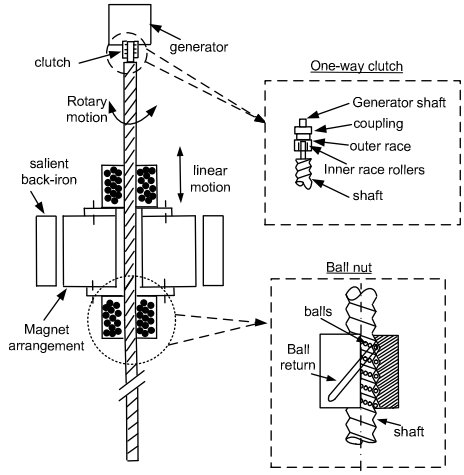


Figure 1.5 Ball screw arrangement to convert linear to rotary motion

### 1.2.3 Numerical Modeling

A coupled fluid structure interaction and electro-magnetic model was developed to predict the performance of the contact-less force transmission wave energy conversion system. Matlab Simulink was used to create a numerical model of the power take-off system including the ball screw arrangement and the rotary generator. The hydrodynamic forces on the buoy were modeled by solving the Reynolds averaged Navier-Stokes equations using Comet - a commercial computational fluid dynamics code. The hydrodynamic forces predicted by Comet

and the power take-off forces predicted in Simulink were used to determine the acceleration of the buoy for each time step of the simulation (Agamloh 2006). Based on the calculated acceleration, the velocity and position of the buoy are determined and subsequently the position of the buoy is updated in the hydrodynamic model. In this way the response of the fully coupled system can be determined numerically. A flow chart of the solution process used in the coupled model is shown in Figure 1.6.

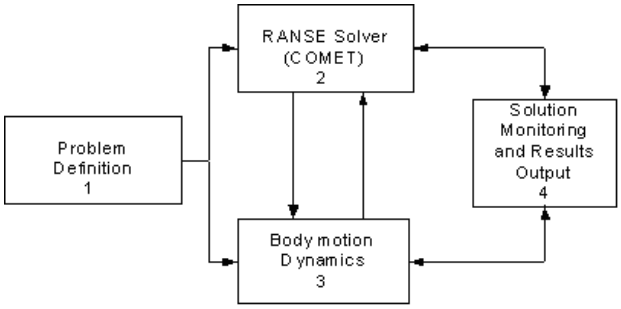


Figure 1.6 Solution method used in the coupled Comet/Simulink model

A major drawback of this approach is that the numerical model is extremely computationally intensive. Days of computing time may be required to get tens of seconds of simulation data. An efficient coupled model of the hydrodynamic and electro-magnetic system was developed to enable research on the optimal control of a wave energy converter utilizing a linear generator for power take-off (Schacher 2007). This model uses a Morison model to calculate the hydrodynamic forces on a cylindrical buoy based on empirical data (Faltinson 1999) (Patel 1980). The electro-magnetic forces are determined using closed form equations to model a linear generator. The hydrodynamic and electro-magnetic forces are used to drive a single degree of freedom dynamic model of the wave energy converter system. A controller can then be designed to maximize the power output of the generator given the constraints of the system. Matlab Simulink has been used to develop the component models and to couple them together in a single numerical model. Figure 1.7 illustrates the connections between the various components of the model. While this modeling approach allows for efficient simulation of the dynamics of a wave energy converter in heave, it was limited by

the fact that it was only a 1-DOF model. The effects of roll and pitch on the system dynamics were not modeled, which could lead to over estimation of the system response in heave. Forces generated by the mooring system were also neglected, which may have significant effects on the performance of a wave energy converter.

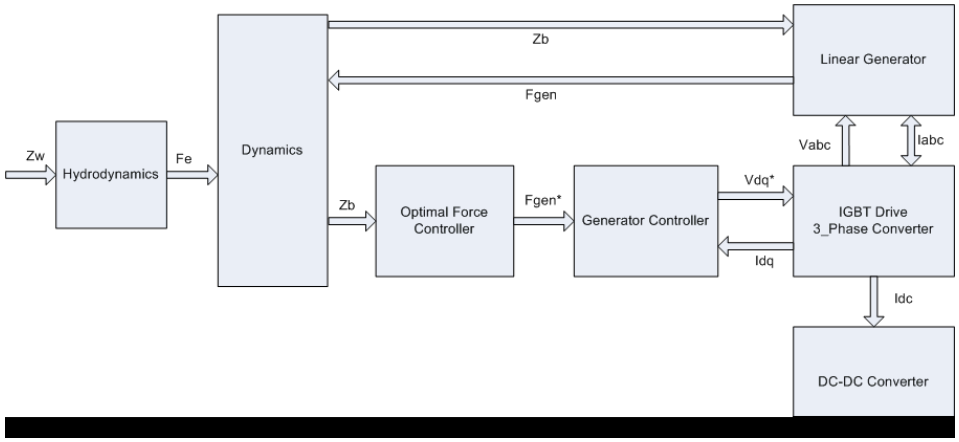


Figure 1.7 Flow chart of the coupled model used to research optimal control of a wave energy converter using a linear generator for power take-off

## 1.3 The SeaBeavI Project

### 1.3.1 Project Overview

Prior to the fall of 2006, research on wave energy at Oregon State focused on developing small scale direct-drive prototypes that were tested in the long wave flume at the O.H. Hinsdale wave research laboratory. With support from the US Department of Energy, the goal of the SeaBeavI project was to build a 1kW direct drive wave energy conversion system and test it in the open ocean. Starting in the fall of 2006, an interdisciplinary research team worked to design and build a taught moored, dual body wave energy conversion system utilizing a permanent magnet linear generator as a power take-off system. This device, known as the SeaBeavI, was tested off the coast of Newport, Oregon in October of 2007.

### 1.3.2 Laboratory Experiments and Numerical Modeling

To evaluate the performance of the SeaBeavI system, the linear generator was tested using a Linear Test Bed at the Wallace Energy Systems & Renewables

Facility. The results from the Linear Test Bed testing were used to model the generator forces in a coupled model of the floating system, mooring, and generator using OrcaFlex; a commercial coupled analysis tool developed for the offshore oil industry. Data from the OrcaFlex simulations was also used to develop displacement time series to drive the Linear Test Bed. In this way, the efficiency of the linear generator in a realistic operating condition can be evaluated. Once the efficiency of the system was determined over a range of operating conditions, the annual energy production capacity of the device can be calculated.

# 2 Design, Construction, and Ocean Testing of a Taut-Moored Dual-Body Wave Energy with a Linear Generator Power Take-off

David Elwood, Joe Prudell, Chad Stillinger, Adam Brown,
Annette von Jouanne, Solomon Yim, Ted Brekken, Robert Pasch

Proceedings of OMAE 2009
Honolulu, Hawaii

**Proceedings of OMAE2009**
**28th International Conference on Offshore Mechanics and Arctic Engineering**

# OMAE2009-XXXXX

# DESIGN, CONSTRUCTION, AND OCEAN TESTING OF A TAUT-MOORED DUAL-BODY WAVE ENERGY CONVERTER WITH A LINEAR GENERATOR POWER TAKE-OFF

**David Elwood, Solomon C. Yim**
School of Civil and Construction Engineering
Oregon State University
Corvallis, Oregon 97331

**Adam Brown, Chad Stillinger, Robert Pasch**
Dept of Mechanical Engineering
Oregon State University

**Joe Prudell, Annette von Jouanne, Ted Brekken**
School of Electrical Engineering and Computer Sciences
Oregon State University

## ABSTRACT
This paper presents an overview of the SeaBeavI project which began in the fall of 2006 and culminated in the ocean testing of a 1kW direct-drive wave energy conversion system in the fall of 2007. The SeaBeavI project was an interdisciplinary effort bringing together researchers from electrical, mechanical, and ocean engineering. A systems design approach was used to develop the taut-moored dual-body wave energy converter concept with the detailed design focused on production and ease of maintenance.

## INTRODUCTION
Modern ocean wave energy research began during the oil crisis of the 1970s. Much of the early work was conducted in Europe by Salter (Salter et al. 1976) and Evans (Evans 1979) in England and Falnes (Falnes 2002) in Norway, amongst others. Several promising concepts were developed by 1980 including point absorber wave--energy converters such as the infamous Salter duck (Salter eta al. 1976) and oscillating water--column (OWC) devices utilizing a Well's turbine (Curran and Gato 1997) for power take-off. With the decrease in oil prices in the early 1980s much of the funding for ocean wave energy conversion was cut and no full scale demonstrations of the technology were constructed. Recently concerns about global warming and the increasing price of conventional energy have led to resurgence in research on ocean wave energy conversion.

Currently several commercial developers are working to build grid connected wave energy conversion systems. These include the oscillating water column device, Limpet, installed on the Isle of Islay off Scotland in 2000 (WaveGen 2008), and the Pelamis wave energy conversion system to be deployed off the coast of Portugal in the spring of 2007 (Pelamis Wave Power 2008). In the United States, Ocean Power Technologies (OPT) has developed a point-absorber wave energy conversion buoy for the US Navy with a test buoy deployed off Oahu, Hawaii (Ocean Power Technologies 2008). OPT has plans to deploy an array of these buoys off the coast of Reedsport, Oregon representing the first grid-connected wave energy conversion plant in the United States.

## CONCEPT DESIGN

A systems design approach was used to develop the conceptual design of the SeaBeavI wave energy converter. The floating system, mooring, and power take-off concepts were optimized concurrently in order to ensure that the combined system was as efficient as possible. Efficiency of the system was measured both in terms of the power capture efficiency and the overall cost of the system. The SeaBeavI concept represents an original approach to the conversion of ocean wave energy into electricity.

**Floating System:**
The floating system concept for the SeaBeavI consists of a central cylindrical spar and an outer Taurus-shaped buoy. The spar is moored to the bottom with the buoy free to translate relative to the spar. Having two floating bodies allows for the central spar to be restrained laterally using a mooring system without limiting the heave of the buoy. This allows for a conventional mooring system to be utilized without the need for subsurface floats to reduce the vertical forces on the system. Figure 1 provides an illustration of the two-body floating-system concept developed for the SeaBeavI.

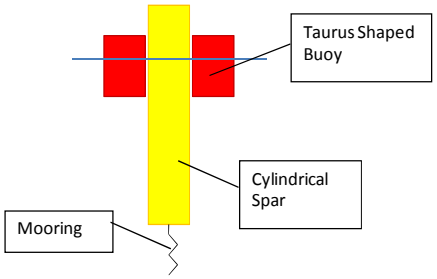


Figure 1 Dual body wave energy conversion system concept

**Mooring System:**
In a two body wave energy converter concept, the relative velocity and force transferred between the spar and the buoy are used to extract energy from the ocean waves. To maximize the power extracted by the system, the relative motion between the two bodies must be maximized while allowing for effective force transmission. The SeaBeavI concept uses a tensioned mooring to restrain the heave of the spar while still allowing the buoy to translate. The tensioned mooring line allows for effective force transmission during both the upstroke and the down stroke of the buoy. A tensioned mooring system also limits the watch circle of the system allowing for tighter spacing in arrays of devices.

**Power Take-off System:**
Conversion of the relative linear motion between the spar and the buoy to electricity is achieved through the use of a permanent magnet linear generator. The generator consists of a stack of permanent magnets housed in the buoy and an armature composed of copper wire and back iron in the spar. As the magnets translate relative to the copper wires, current is induced in the wire due to the moving magnetic field. The generator topology allows for the heavier magnet section to be located in the higher buoyancy buoy. With the armature located in the spar, the power take-off cable is attached to a taut moored floating body, limiting the forces on the cable. Figure 2 provides an illustration of the power take-off system concept.

## DETAILED DESIGN

**Principal Dimensions:**
Dimensions of the buoy and spar were constrained by the limitations of the long wave flume at the O.H. Hinsdale Wave Research Laboratory. Prior to testing in the ocean, the system was intended to be tested in the laboratory under controlled conditions. The maximum water depth of the long wave flume is 10 feet, which limited the overall draft of the system. The diameter of the buoy was constrained by the width of the flume in addition to depth. Since the flume is 12' wide, the maximum diameter to ensure a blockage of less than 33% is 4.95 feet. The final configuration of the system had an overall draft of 8.17 feet with a buoy diameter of 5.08 feet. A buoy diameter greater than the initial target was required to provide adequate stability based on the as-built weight of the generator. Figure 3 provides a rendering of the spar and buoy and their internal arrangements.

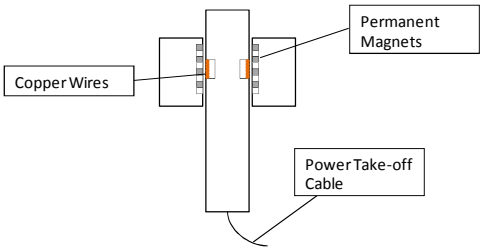

Figure 2 Power take-off system concept

Table 1 Principal dimensions of the SeaBeavI wave energy converter

| Buoy | | |
|---|---|---|
| Diameter | 5.08 | feet |
| Draft | 6.00 | feet |
| Depth | 7.50 | feet |
| Freeboard | 1.50 | feet |
| Displacement | 6473.90 | lbf |

| SPAR | | |
|---|---|---|
| Diameter | 2.00 | feet |
| Draft | 8.17 | feet |
| Depth | 10.71 | feet |
| Freeboard | 2.54 | feet |
| Displacement | 1616.42 | lbf |

**Buoy Structure:**
The buoy structure was designed in a modular fashion to allow for ease of construction and maintenance. The buoy was constructed of glass reinforced plastic (fiberglass) with high density foam to provide extra buoyancy. Because the linear generator depends on magnetics for the contactless force transmission and the generation of electricity, the use of magnetic materials in the structure of the buoy and spar is not desirable. In addition, fiberglass does not corrode in salt water making it a preferred material for salt water applications.

The magnet section of the linear generator was integrated into the buoy structure so that the magnets were removable. A keyway at the top and bottom of the magnet section transfers the lateral forces between the magnet section and the hull of the buoy. Rubber o-rings were used to seal the joint between the magnet section and the keyway. To hold the magnet section in place and provide compression for the o-rings, a heavy fiberglass lid was attached to the buoy structure with 12 half inch stainless steel bolts. A general arrangement of the buoy structure is included in the Appendix.

**Spar Structure**
The spar structure was designed in three sections allowing the armature to be removed for maintenance and testing. Like the buoy, the spar is made entirely of fiberglass with stainless steel fasteners. Having a non-magnetic spar is important since the spar lies within the field of the magnet section. The bottom section of the spar houses a ballast tank used in the tensioning of the mooring system. A half spherical base on the bottom of the ballast tank provides a strong point for attaching the mooring line. The power take-off cable attaches to a wet mateable waterproof connector at the base of the spar.

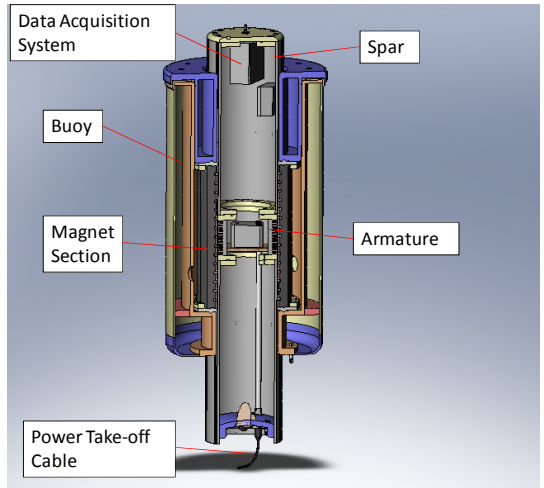


Figure 3 Rendering of spar and buoy general arrangement

The center section of the spar houses the armature of the linear generator along with the battery to power the ballast control and data acquisition systems. Twelve sections of ½ inch stainless steel threaded rod join the center section to the top and bottom compartments of the spar. Compression plates with two sets of rubber o-rings ensure that the entire spar is sealed. A bilge pump in the lower section of the spar provides both dynamic ballast control and protection against leaks in the operating condition.

The top section of the spar houses the ballast control and data acquisition systems. A linear position sensor utilizing a magnetic pickup records the relative displacement between the buoy and the spar. Thermocouples mounted on the inside of the armature record the temperature of the coils during operation of the generator. Wireless communication is used to transmit the measured data to a nearby research vessel along with providing control signals for the pumping system. A fiberglass lid attached with a 12 bolt pattern and sealed with a rubber o-ring isolates the top section of the spar from the sea. A general arrangement of the spar structure is included in Appendix 1.

**Linear Generator:**
The generator consists of an 1196 mm long magnet section housed in the buoy and a 286 mm long armature in the spar (Prudell 2007). The magnet section is composed of over 900

individual neodymium magnets held in place using aluminum retainers. The back iron on the magnet section is radially laminated to reduce eddy current losses. A composite structure utilizing stainless steel rods, aluminum end pieces, and a fiberglass shell was used to provide structural support for the magnets and back iron during construction and installation. This structure also enabled the generator to be tested without the support of the buoy structure. A thin stainless steel tube adhered to the inner radius of the magnet section isolates the permanent magnets from the sea water and provides a smooth surface for the linear bearing system.

The armature also utilizes radially laminated back iron with slots filled with windings of 14 gauge copper wire. Each coil of the armature consists of 77 turns of wire with 4 coils for each of the 3 phases of the generator. The structural rigidity of the armature is provided by two fiberglass compression rings tied together using ½ inch stainless steel rods. Each phase of the generator was terminated into a central junction box and the power was fed out of the spar through the power take-off cable. A rendering of the magnet section and armature is included as Figure 4.

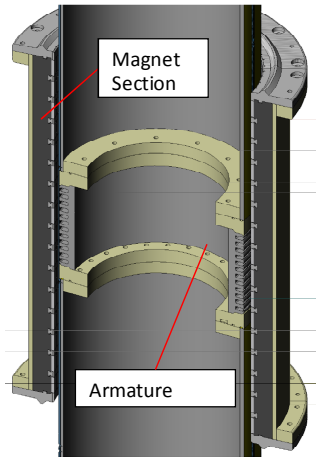


Figure 4 Cross section of the magnet section and armature

**Linear Bearings:**
To enable efficient conversion of the linear motion between the spar and the buoy into electricity, the gap between the magnet section and the armature must be small (<=5mm). This gap needs to be uniform around the entire circumference of the spar in order to ensure that the magnetic normal forces between the magnet section and the armature are balanced. If the alignment is not precise, the normal force between the two sections becomes extremely great and increased friction will result.

Thin strips of a laminated plastic material hold the gap between the buoy and the spar and provide a smooth bearing surface to ride against the stainless steel tube adhered to the inside of the magnet section. Twelve ½ inch wide strips are glued into grooves evenly spaced around the circumference of the outer shell of the spar. The material used to manufacture the bearing strips is designed to be water lubricated making it ideally suited for marine applications.

**Mooring:**
The tensioned mooring system consists of a single-anchor-leg mooring with a mushroom anchor. The buoyancy of the spar is greater than its weight, generating 650 pounds of pretension in the mooring line. This pretension is sufficient to ensure that the line will not go into compression during the down stroke of the buoy. Mooring pretension is achieved through the use of spar water ballast during installation. The spar ballast tank is filled with water prior to installation and the mooring line is attached slack to the base of the spar. Slack in the mooring system is removed using a tensioner system and the water is pumped out of the ballast tank to achieve the desired pretension.

The mooring line is composed of steel bottom chain and synthetic rope joined together using forged anchor shackles. A cluster of trawl floats is used as a mid-column float to remove the weight of the bottom chain from the spar. A pear link at the top of the mid-column float allows for the tensioner system to be attached by divers during installation of the device. Two 3:1 polycarbonate blocks and 300 feet of synthetic line make up the block and tackle system used to tension the mooring. Once the tensioner has been attached to the mid-column float by a dive team, the system can be tensioned and detensioned from the surface. A general arrangement of the mooring system is included in the Appendix.

**CONSTRUCTION**
Construction of the SeaBeavI wave energy conversion system was completed during the summer of 2007 with the subsystems having been

built separately by their respective manufacturers. The structural components were built at Plasti-Fab Inc., a structural fiberglass manufacturer in Tualitin, Oregon. While the fiberglass components were being fabricated, the magnet section and armature were being constructed by graduate research assistants at Oregon State. Simultaneously, the mooring was being assembled by the staff rigger at Englund Marine in Newport, Oregon.

**Structural Components:**
The outer shell of the buoy was constructed using a filament winding process on a large diameter mandrel. Both the bottom ring frame and the inner shell of the buoy structure were molded using a vacuum driven resin transfer process. To provide extra buoyancy and stability for the buoy, high density structural foam was added to the exterior of the outer shell and sealed with a layer of fiberglass mat. The lid for the buoy was constructed of fiberglass with a foam core. Keyways for the top and bottom of the magnet section were also molded and grooves for the o-rings machined using a 3DOF computer controlled router. Pictures of the buoy structure can be seen in Figure5.

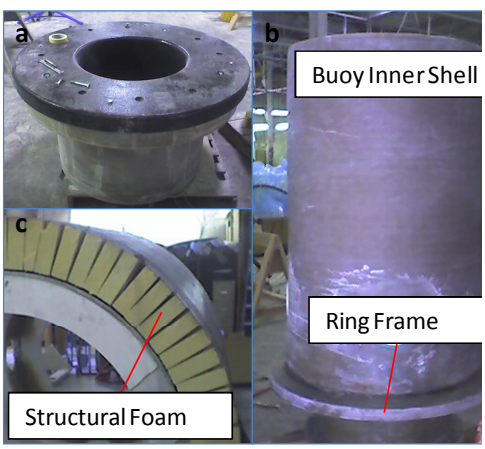


Figure 5 a) Buoy lid b) Buoy inner shell and ring frame c) Buoy outer shell with added foam

The outer shell of the spar was constructed from two sections of 24 inch fiberglass water pipe with a ½ inch wall thickness. The outer diameter of the pipe was machined and slots for the bearing strips were cut using a CNC lathe. A molded half spherical fiberglass bottom plate was fixed to the bottom of the spar to provide an attachment point for the mooring line. One inch thick fiberglass ring frames were molded for the top of the lower spar section, and the top and bottom of the upper section. O-ring grooves were cut in the ring frames using the computer controlled router. Pictures of the spar structure during construction can be seen in Figure 6.

**Linear Generator:**
The linear generator components were assembled by hand by graduate research assistants (Prudell 2007). Each of the laminations for the armature and magnet section was hand shimmed using high temperature shim tape. The armature laminations were stacked using the fiberglass compression plates to hold the laminations in place during construction. The magnet section was constructed in quarter round sections that were assembled in a specially made jig. After the laminations were assembled, the quarter rounds and armature were dipped in high temperature epoxy resin to protect the iron from corrosion and provide insulation between the laminations. The permanent magnets were fixed to the quarter rounds individually and then the sections were assembled to form the completed magnet section. The copper was wound onto the armature using a specially built winder with fiberglass insulation between layers of windings to prevent internal shorts between wires. Pictures of the armature and magnet section build can be seen in Figures 7 a and c. The completed generator components can be seen in Figures 7 b and d.

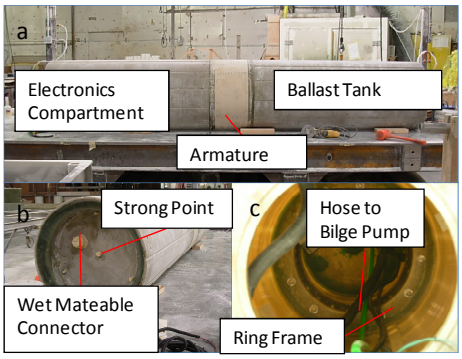


Figure 6 a) Spar structure showing the ballast tank, armature, and electronics compartment b) Bottom plate with wet mateable connector and strong point c) Interior structure showing fiberglass ring frame at the top of the armature

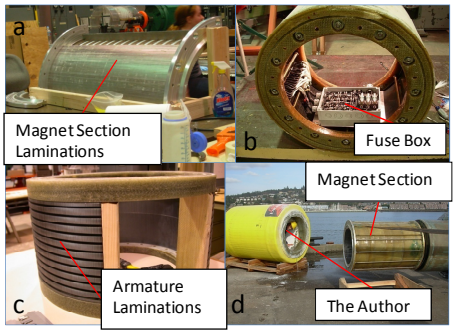


Figure 7 a) Laminations being assembled for one of the magnet section quarter rounds b) Completed armature with terminations and fuse box c) Armature laminations being assembled between the fiberglass compression plates d) Magnet section being removed from the buoy after testing

**Mooring System:**
Eyelets were spliced into the ends of the spectra rope in order to prevent abrasion between the rope and the connecting shackles. A marker float for the mooring was built using a surplus 1m steel float fitted with a mast and a 2 nautical mile solar powered light programmed to flash 15 times per minute. The anchor for the system was an 8200 pound steel mushroom anchor purchased as surplus from a scrap yard in Seattle, WA. The tensioner system consisted of two Harken 75 mm Carbo triple blocks run with 300 feet of Sampson Dura-Plex line. The tensioner was attached to a titanium eye nut anchored to the base plate of the spar. A rope clutch was used to enable the tension of the system to be adjusted during operation. Figure 8 provides photographs of the as-built mooring system.

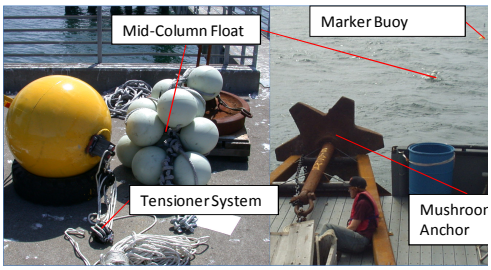


Figure 8 a) Tensioner system and mid-column float b) Mooring system just prior to installation

## INSTALLATION AND OCEAN TESTING

The installation and testing of the SeaBeavI wave energy converter was completed between August and October of 2007. The system was installed in two phases, with the mooring system being installed in mid-August and the floating system in early October. The SeaBeavI was tested on the pier at the Hatfield Marine Science Center and in Yaquina Bay followed by testing in the open ocean.

**Installation Vessel:**
The Research Vessel Pacific Storm was used for both the mooring installation and the ocean testing of the wave energy conversion system. The Pacific Storm is a converted fishing trawler owned by the Oregon State Marine Mammal Institute. The 80 foot vessel is outfitted with a 10,000 pound crane used to launch the two rigid inflatable boats used for tracking and tagging whales. With the net reel and stern ramp removed, the working deck of the vessel is quite large, making it well suited for deploying oceanographic equipment.

**Mooring Installation:**
The mooring system for the SeaBeavI was designed to be installed prior to the installation of the floating system. After the anchor, mooring line, and mid-column float were installed, SCUBA divers would be used to attach the tensioner system to the mid-column float during installation of the floating system. A steel A-frame, shown in Figure9, was designed as a launching platform for the mushroom anchor to facilitate the deployment of the mooring from the Pacific Storm. A pelican hook attached the shank of the anchor to the forward end of the A-frame, providing a quick release.

Before the mooring system was installed, the components were staged on the starboard rail of the aft deck of the Pacific Storm. The chain and spectra rope were coiled into barrels to ensure that the line fed freely as the system was deployed. Installation of the mooring began by deploying the marker float using the boat's crane. The rest of the mooring system was then strung out behind the vessel, as seen in Figure8b, and towed to the test site location. Once on station, the pelican hook was tripped and the weight of the head of the mushroom anchor caused the anchor to pivot off the A-frame and into the water, pulling the mooring line down to the bottom.

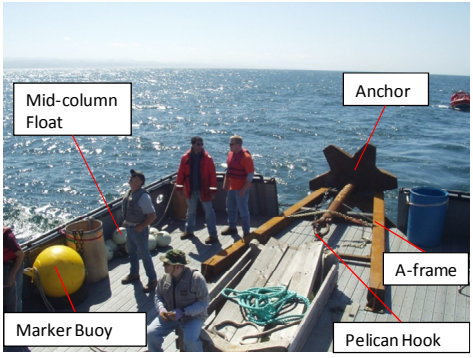


Figure 9 Mooring system staged on the deck of the Pacific Storm just prior to installation

**Bay Testing:**
Before testing the SeaBeavI in the open ocean, the system was tested on the pier at the Hatfield Marine Science Center and in Yaquina Bay. The ballast control system, data acquisition system, and mooring tensioner were all tested in controlled conditions prior to ocean testing. The linear generator was tested on the pier by placing the buoy on concrete piers and actuating the spar using a boom crane (see Figure10a).

A stack of railroad wheels was used as a test anchor and placed in the bay adjacent to the port operations pier at Hatfield. The mooring tensioner was attached to the railroad wheels by divers and the spar and buoy were lifted into the water using the boom crane. Once the spar and buoy had been installed, the mooring tensioner was tested from the pier. Unfortunately the tensioner did not perform as intended during the bay testing. Due to friction in the system, the slack could not be taken up by the block and tackle and when the spar was deballasted, the line was not tensioned.

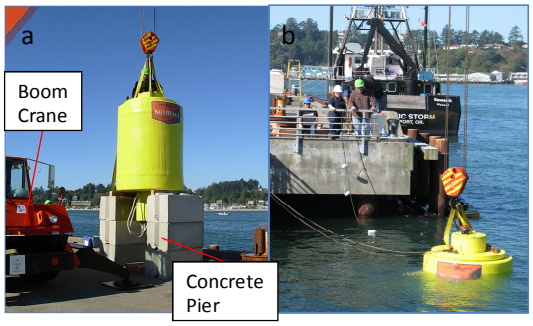


Figure 10 a) Crane actuating the SeaBeavI on the pier b) SeaBeavI being tested in Yaquina Bay

The testing of the linear generator on the pier indicated that the system was capable of generating the rated power of 1kW at 0.5 m/s (Prudell 2007). The cable tension required to actuate the spar at the rated power level was significantly greater than was anticipated. Precise measurement of the tension was not possible since the load cell on the crane did not have data logging capability. The pier side testing indicated that the system was capable of generating 1kW if the required force could be generated by the buoy and spar.

**Ocean Testing:**
Prior to ocean testing the decision was made not to install the SeaBeavI on the tensioned mooring system. Since the tensioning system had failed to perform as expected in the bay, and the dive team was hesitant to try again in the open ocean, installing the tensioned mooring was not feasible. In place of the tensioned mooring, a 400 pound steel reaction plate was suspended 40 feet below the spar and attached to the eye nut on the spar's base plate.

On October 6, 2007 an excellent weather window for ocean testing was available with the SeaBeavI and the installation vessel staged and ready for testing. The significant wave height was between 2 and 3 meters with virtually no wind. The decision was made after successfully testing the generator on the day before (October 5$^{th}$) that the SeaBeavI would be towed out to the test site the following morning and tested with a suspended reaction plate.

The towing arrangement of the SeaBeavI consisted of a 150 foot towline attached to the stern of the Pacific Storm with a two point bridle. A second line from the base plate of the spar was tended by one of the Pacific Storm's RHIBs following behind the device. The power take-off

cable was attached to the wet mateable connector on the base plate of the spar and was buoyed by foam floats tied to the cable approximately every 5 feet. The cable was attached to a load bank and oscilloscope in the wet lab of the Pacific Storm where test personnel could monitor the power output from the device. The towing arrangement can be seen in Figure11a.

.

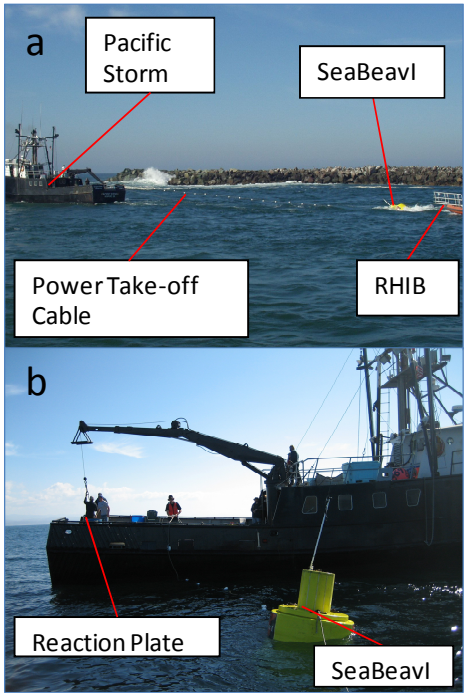


Figure 11 a) Towing arrangement for the SeaBeavI b) SeaBeavI just prior to installation of steel reaction plate

Once the SeaBeavI was on station at the test site, the reaction plate was lifted from the deck of the Pacific Storm and lowered into the water using the crane (see Figure11b). With the reaction plate installed, the spar and buoy were stable and had very little pitch or roll response. No relative motion was observed between the buoy and spar, however, and no voltage was measured from the linear generator. When the system was towed back to shore it was discovered that the power take-off cable had been disconnected from the wet mateable connecter. This may have occurred during the tow out to the test site, during testing, or while being towed back to the pier.

## CONCLUSIONS

The ocean testing of the SeaBeavI helps to improve the testing procedures for the device and gave the WESRF researchers valuable experience on the ocean. The towing procedure implemented using the Pacific Storm was very successful and was determined to be preferable to installing the device using a crane. Strain relief should be included for the power take-off cable in future to ensure that the cable does not disconnect during towing or testing. Additionally, it was determined that a 400 pound reaction plate is not sufficient to provide reaction force for the generator in a 2m significant wave height. For successful operation of the system as built, a tensioned mooring would have been required.

## ACKNOWLEDGEMENTS

We are thankful for the generous in-kind donations from PlastiFab Inc. and the Hatfield Marine Science Center, which made this project possible. We would also like to thank the Department of Energy and our industry partner Columbia Power Technologies for their support of our research.

## REFERENCES

Archimedes Wave Swing. 6 June 2008 <http://awsocean.com/>.

Curran R., L.M.C Gato. "The energy conversion performance of several types of Wells turbine designs." Proceedings of the Institute of Mechnical Engineers (1997): 133-145.

Evans, D.V. "Some theoretical aspects of three dimensional wave energy absorbers." Proceedings of the First Symposium on Wave Energy Utilization. Gothnburg, Sweden: Chalmers University of Technology, 1979. 77-106.

Falnes, J. Ocean Waves and Oscillating Systems. Cambridge, UK: Cambridge University Press, 2002.

Mueller, M.A. "Electrical generators for direct drive wave energy converters." Proc. IEE Gen. Trans. Distr. (2002): 446-456.

Ocean Power Technologies. Ocean Power Technologies. 6 June 2008 <http://www.oceanpowertechnologies.com/>.

Pelamis Wave Power. Pelamis Wave Power. 6 June 2008 <http://www.pelamiswave.com>.

Polinder H., M.E.C Damen, F. Gardner. "Linear PM generator for wave energy conversion in the AWS." IEEE Transactions on Energy Conversion (2004): 583-589.

Prudell, J.H. "Novel design and implementation of a permanant magnet linear tubular generator for wave energy conversion." Masters Thesis. Corvallis, OR: Oregon State University, 2007.

Salter S.H., D.C. Jeffery, J.R.M. Taylor. "The architecture of nodding duck wave power generators." The Naval Architect (1976).

WaveGen. WaveGen. 6 June 2008 <http://www/wavegen.co.uk>.

# APPENDIX

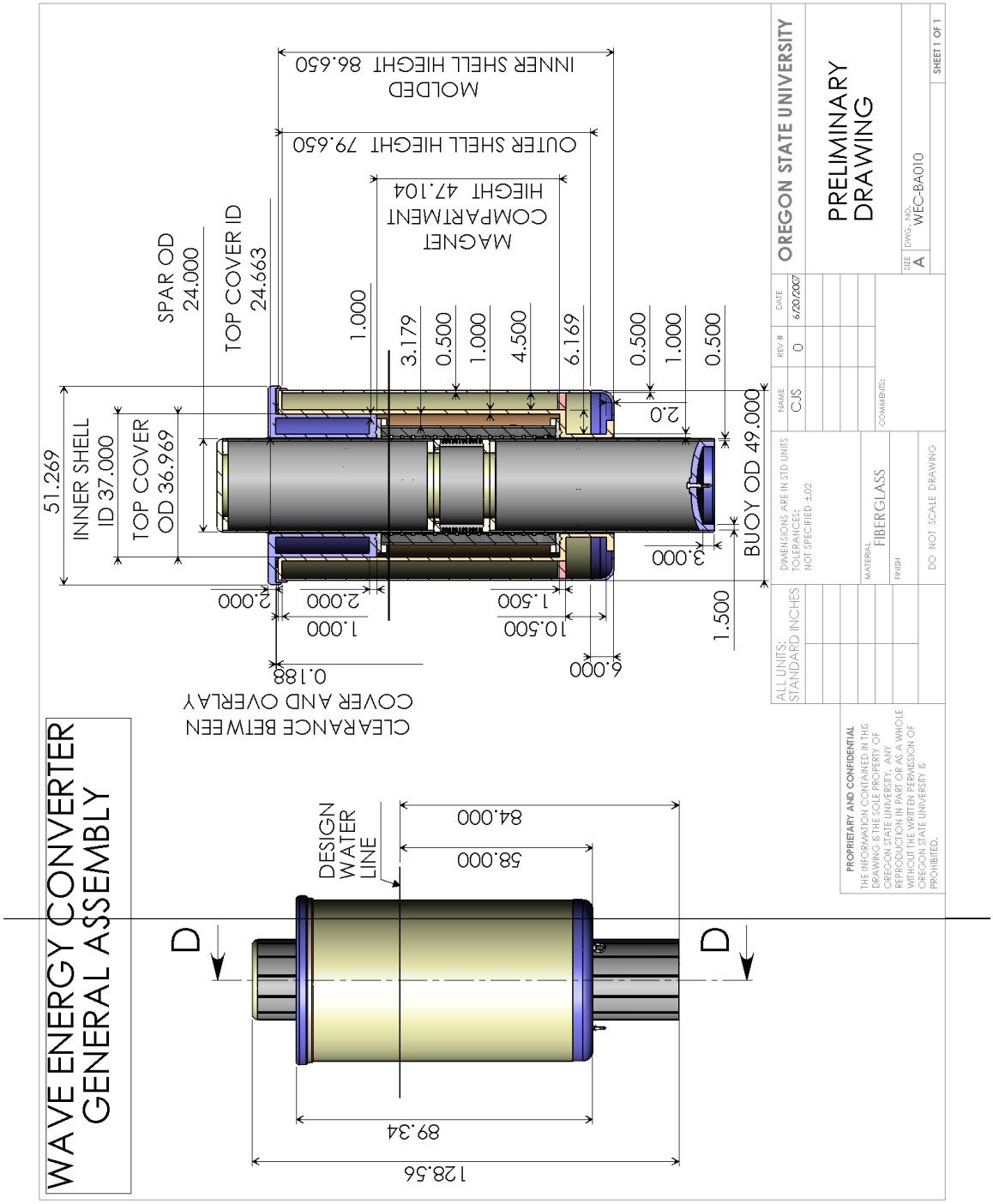
WAVE ENERGY CONVERTER
GENERAL ASSEMBLY
D
D
128.56
89.34
DESIGN
WATER
LINE
58.000
84.000
CLEARANCE BETWEEN
COVER AND OVERLAY
0.188
6.000
10.500
1.500
1.000
2.000
2.000
1.500
3.000
BUOY OD 49.000
51.269
INNER SHELL
ID 37.000
TOP COVER
OD 36.969
SPAR OD
24.000
TOP COVER ID
24.663
1.000
3.179
0.500
1.000
4.500
6.169
0.500
1.000
0.500
2.0
MAGNET
COMPARTMENT
HIEGHT 47.104
OUTER SHELL HIEGHT 79.650
MOLDED
INNER SHELL HIEGHT 86.650
OREGON STATE UNIVERSITY
PRELIMINARY
DRAWING
NAME
CJS
REV #
0
DATE
6/20/2007
COMMENTS:
SIZE
A
DWG. NO.
WEC-BA010
SHEET 1 OF 1
ALL UNITS:
STANDARD INCHES
DIMENSIONS ARE IN STD UNITS
TOLERANCES:
NOT SPECIFIED ±.02
MATERIAL
FIBERGLASS
FINISH
DO NOT SCALE DRAWING
PROPRIETARY AND CONFIDENTIAL
THE INFORMATION CONTAINED IN THIS DRAWING IS THE SOLE PROPERTY OF OREGON STATE UNIVERSITY. ANY REPRODUCTION IN PART OR AS A WHOLE WITHOUT THE WRITTEN PERMISSION OF OREGON STATE UNIVERSITY IS PROHIBITED.

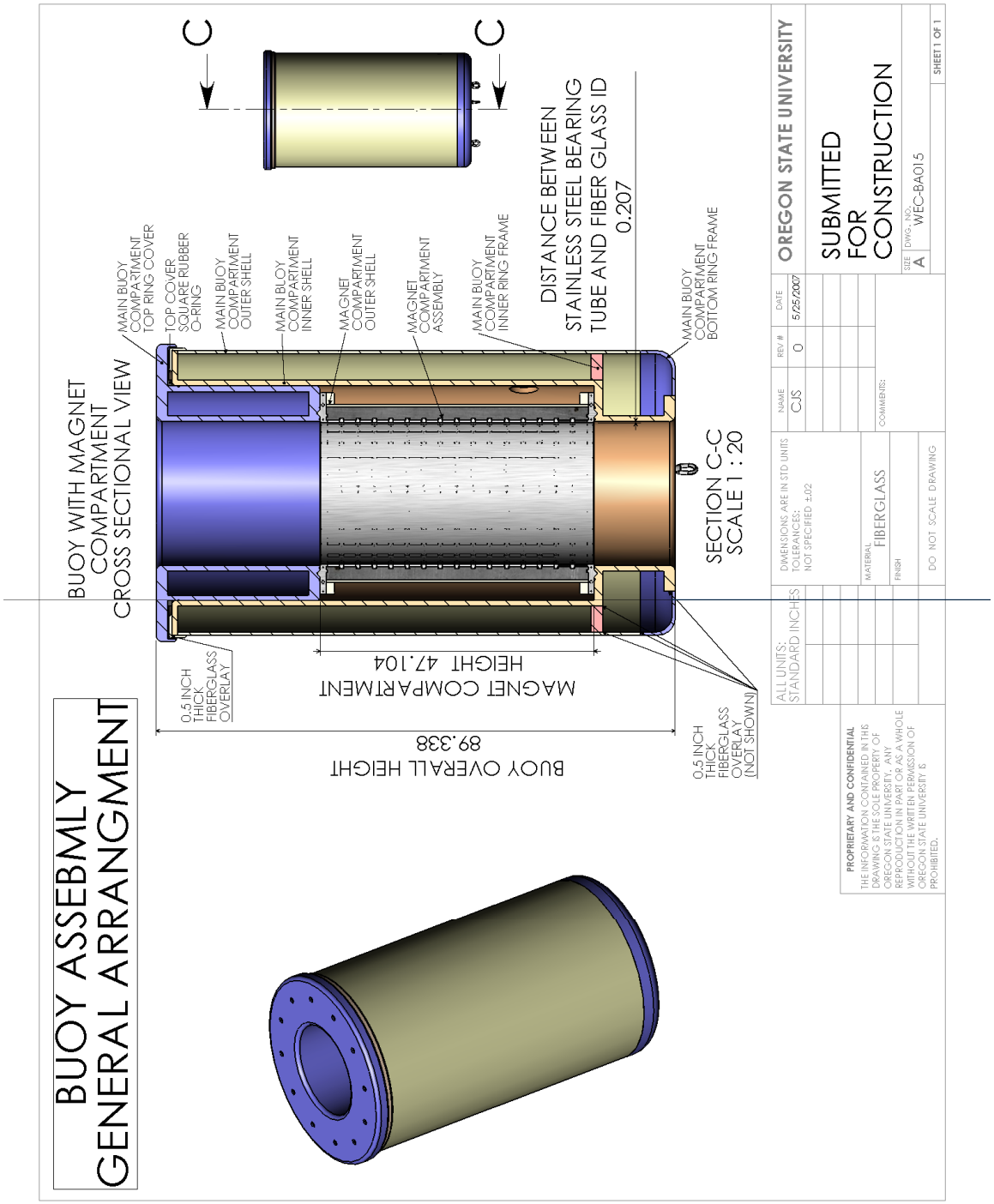
BUOY ASSEBMLY
GENERAL ARRANGMENT
BUOY WITH MAGNET
COMPARTMENT
CROSS SECTIONAL VIEW
MAIN BUOY
COMPARTMENT
TOP RING COVER
TOP COVER
SQUARE RUBBER
O-RING
MAIN BUOY
COMPARTMENT
OUTER SHELL
MAIN BUOY
COMPARTMENT
INNER SHELL
MAGNET
COMPARTMENT
OUTER SHELL
MAGNET
COMPARTMENT
ASSEMBLY
MAIN BUOY
COMPARTMENT
INNER RING FRAME
DISTANCE BETWEEN
STAINLESS STEEL BEARING
TUBE AND FIBER GLASS ID
0.207
MAIN BUOY
COMPARTMENT
BOTTOM RING FRAME
C
C
SECTION C-C
SCALE 1 : 20
0.5 INCH
THICK
FIBERGLASS
OVERLAY
MAGNET COMPARTMENT
HEIGHT 47.104
BUOY OVERALL HEIGHT
89.338
0.5 INCH
THICK
FIBERGLASS
OVERLAY
(NOT SHOWN)
ALL UNITS:
STANDARD INCHES
DIMENSIONS ARE IN STD UNITS
TOLERANCES:
NOT SPECIFIED ±.02
MATERIAL
FIBERGLASS
FINISH
DO NOT SCALE DRAWING
NAME
CJS
REV. #
0
DATE
5/25/2007
COMMENTS:
OREGON STATE UNIVERSITY
SUBMITTED
FOR
CONSTRUCTION
SIZE
A
DWG. NO.
WEC-BA015
SHEET 1 OF 1
PROPRIETARY AND CONFIDENTIAL
THE INFORMATION CONTAINED IN THIS
DRAWING IS THE SOLE PROPERTY OF
OREGON STATE UNIVERSITY. ANY
REPRODUCTION IN PART OR AS A WHOLE
WITHOUT THE WRITTEN PERMISSION OF
OREGON STATE UNIVERSITY IS
PROHIBITED.

# MAIN BUOY COMPARTMENT INNER SHELL

THE INNER SHELL IS ONE MOLDED PIECE OF FIBER GLASS

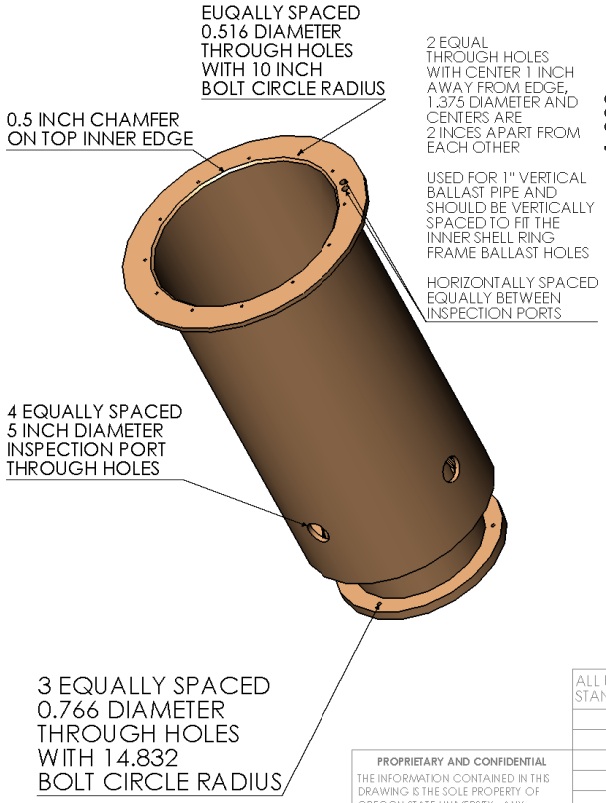


SECTION C-C
SCALE 1 : 25

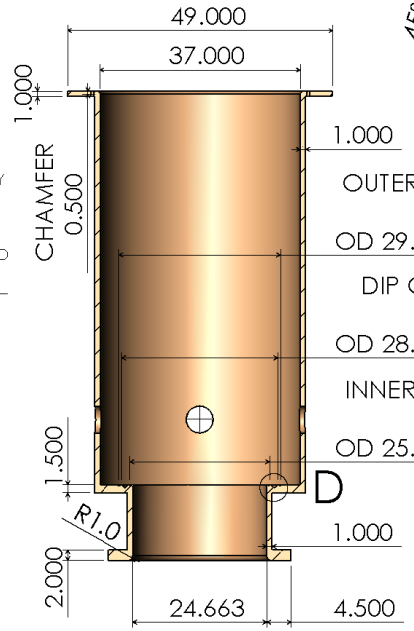


GROOVE DETAIL

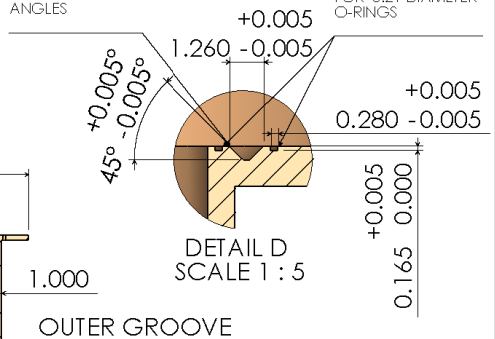


DETAIL D
SCALE 1 : 5

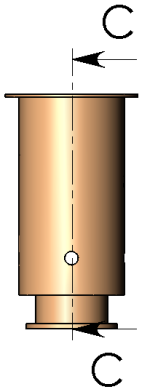


| | | | | |
|---|---|---|---|---|
| ALL UNITS: STANDARD INCHES | DIMENSIONS ARE IN STD UNITS TOLERANCES: NOT SPECIFIED ±.02 | NAME | REV # | DATE |
| | | CJS | 0 | 6/23/2007 |
| MATERIAL: FIBERGLASS | | COMMENTS: | | |
| FINISH: MOLDED | | | | |
| | DO NOT SCALE DRAWING | | | |

**PROPRIETARY AND CONFIDENTIAL**

THE INFORMATION CONTAINED IN THIS DRAWING IS THE SOLE PROPERTY OF OREGON STATE UNIVERSITY. ANY REPRODUCTION IN PART OR AS A WHOLE WITHOUT THE WRITTEN PERMISSION OF OREGON STATE UNIVERSITY IS PROHIBITED.

**OREGON STATE UNIVERSITY**

SUBMITED FOR CONSTRUCTION

SIZE A | DWG. NO. WEC-MBC050

SHEET 1 OF 1

# MAIN BUOY COMPARTMENT TOP RING COVER

12 EQUALLY SPACED
0.156 DIAMETER THROUGH HOLES
WITH 10 INCH BOLT CIRCLE RADIUS
COUNTER BORES
1.5 INCH DIAMETER
0.433 INCH DEEP

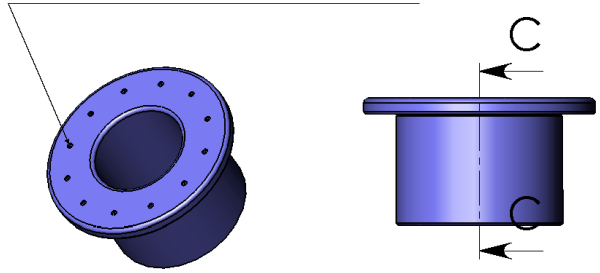


SECTION C-C
SCALE 1 : 12

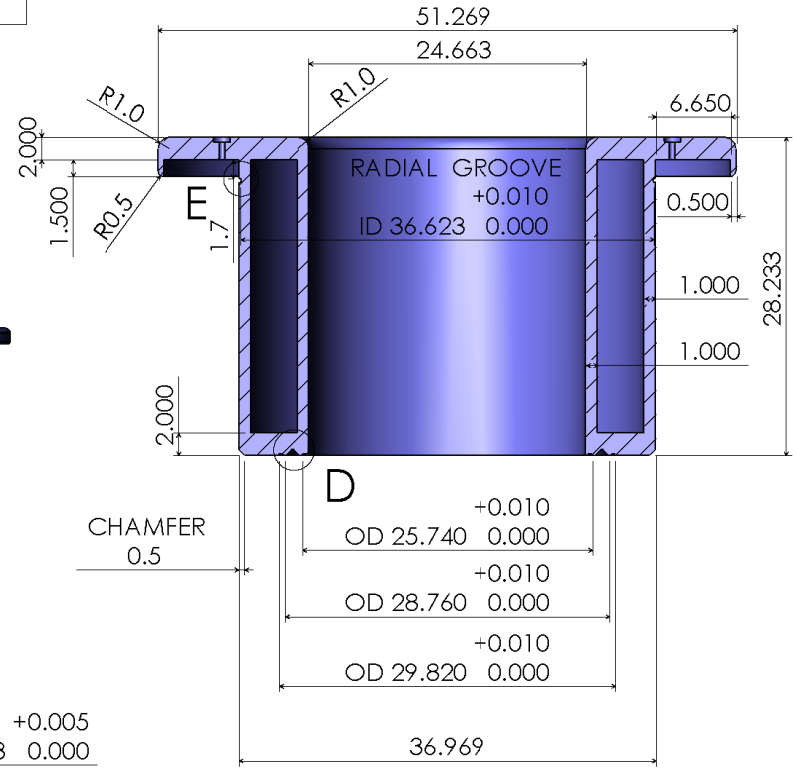


DETAIL D
SCALE 1 : 5

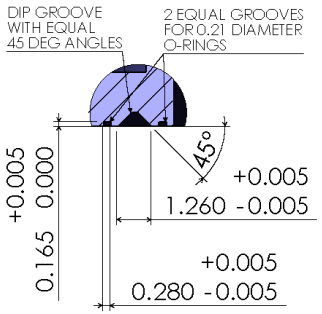


DETAIL E
SCALE 1 : 3

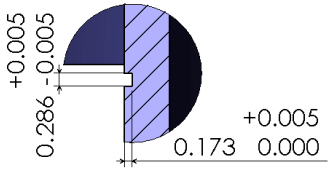


| | | | | |
|---|---|---|---|---|
| ALL UNITS: STANDARD INCHES | DIMENSIONS ARE IN STD UNITS TOLERANCES: NOT SPECIFIED ±.02 | NAME | REV # | DATE |
| | | CJS | 0 | 6/23/2007 |
| MATERIAL: FIBERGLASS | | COMMENTS: | | |
| FINISH: MOLDED | | | | |
| | DO NOT SCALE DRAWING | | | |



**OREGON STATE UNIVERSITY**

SUBMITTED FOR CONSTRUCTION

SIZE A | DWG. NO. WEC-MBC055

SHEET 1 OF 1

# MAGNET COMPARTMENT GENERAL ARRANGMENT

4 MAGNET COMPARTMENT
QUARTER SECTIONS
BAND STRAPPED AND DOWEL
PINNED TOGETHER

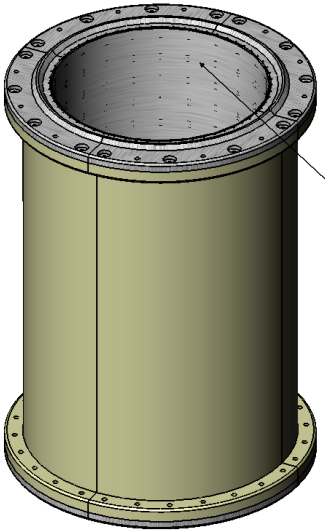


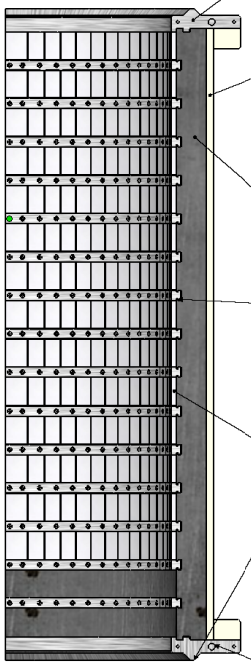


| | | | | | |
|---|---|---|---|---|---|
| ALL UNITS: STANDARD INCHES | DIMENSIONS ARE IN STD UNITS TOLERANCES: NOT SPECIFIED ±.02 | NAME | REV # | DATE | OREGON STATE UNIVERSITY |
| | | CJS | 0 | 5/25/2007 | |
| | MATERIAL | COMMENTS: | | | SUBMITTED FOR CONSTRUCTION |
| | FINISH | | | | SIZE A · DWG. NO. WEC-MC100 |
| | DO NOT SCALE DRAWING | | | | SHEET 1 OF 1 |

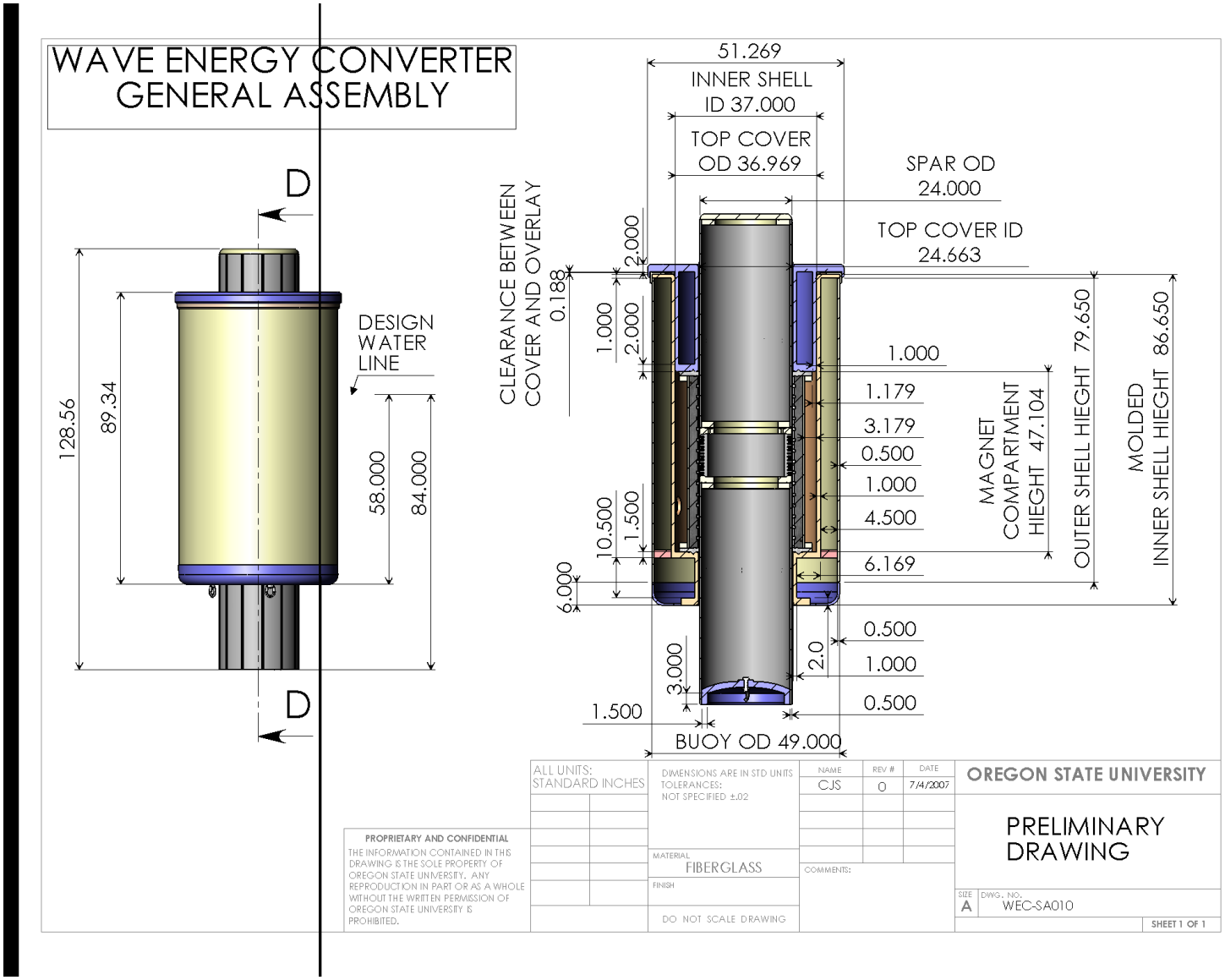
WAVE ENERGY CONVERTER
GENERAL ASSEMBLY
D
D
128.56
89.34
DESIGN
WATER
LINE
58.000
84.000
51.269
INNER SHELL
ID 37.000
TOP COVER
OD 36.969
SPAR OD
24.000
TOP COVER ID
24.663
CLEARANCE BETWEEN
COVER AND OVERLAY
0.188
2.000
1.000
2.000
1.000
1.179
3.179
0.500
1.000
4.500
6.169
MAGNET
COMPARTMENT
HIEGHT 47.104
OUTER SHELL HIEGHT 79.650
MOLDED
INNER SHELL HIEGHT 86.650
10.500
1.500
6.000
3.000
2.0
0.500
1.000
0.500
1.500
BUOY OD 49.000
ALL UNITS:
STANDARD INCHES
DIMENSIONS ARE IN STD UNITS
TOLERANCES:
NOT SPECIFIED ±.02
NAME
CJS
REV #
0
DATE
7/4/2007
OREGON STATE UNIVERSITY
PRELIMINARY
DRAWING
PROPRIETARY AND CONFIDENTIAL
THE INFORMATION CONTAINED IN THIS DRAWING IS THE SOLE PROPERTY OF OREGON STATE UNIVERSITY. ANY REPRODUCTION IN PART OR AS A WHOLE WITHOUT THE WRITTEN PERMISSION OF OREGON STATE UNIVERSITY IS PROHIBITED.
MATERIAL
FIBERGLASS
FINISH
DO NOT SCALE DRAWING
COMMENTS:
SIZE
A
DWG. NO.
WEC-SA010
SHEET 1 OF 1

# SPAR ASSEBMLY GENERAL ARRANGMENT

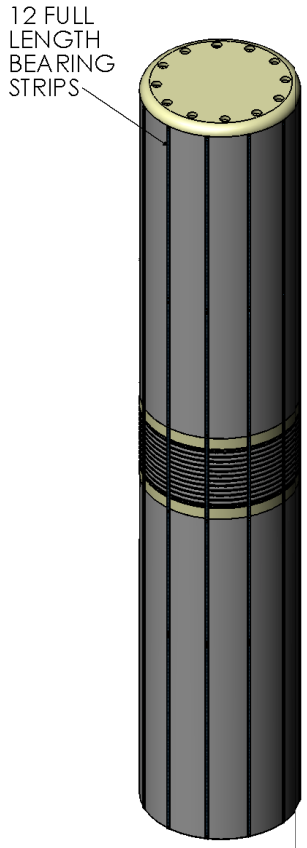


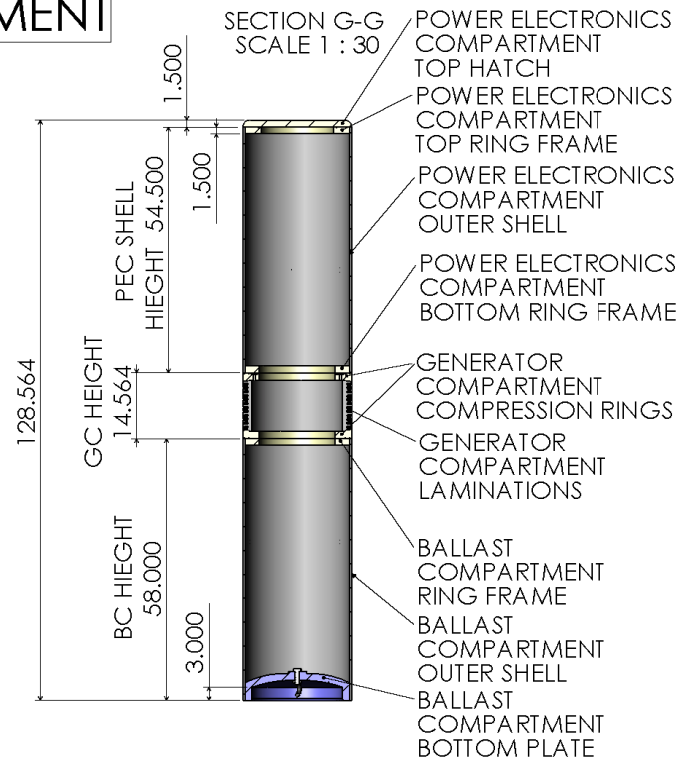



| | | | | | |
|---|---|---|---|---|---|
| ALL UNITS: STANDARD INCHES | DIMENSIONS ARE IN STD UNITS TOLERANCES: NOT SPECIFIED ±.02 | NAME | REV # | DATE | OREGON STATE UNIVERSITY |
| | | CJS | 0 | 7/4/2007 | |
| | MATERIAL FIBERGLASS | COMMENTS: | | | SUBMITTED FOR CONSTRUCTION |
| | FINISH | | | | SIZE A · DWG. NO. WEC-SA015 |
| | DO NOT SCALE DRAWING | | | | SHEET 1 OF 1 |

# 3 Experimental Force Characterization and Numerical Modeling of a Taut-Moored Dual-Body Wave Energy Conversion System

David Elwood, Ean Amon,
Annette von Jouanne, Solomon Yim, Ted Brekken

Journal of Offshore Mechanics and Arctic Engineering

ASME International
3 Park Avenue 22S1
New York, NY 10016

**D. Elwood**
**S.C. Yim**

**School of Civil and Construction Engineering**
**Oregon State University**

**E. Amon**
**A. von Jouanne**
**T.K.A. Brekken**

**School of Electrical Engineering and Computer Science**

# Experimental Force Characterization and Numerical Modeling of a Taut- Moored Dual-Body Wave Energy Conversion System

***This paper presents an innovative modeling technique that combines experimental force measurements from a full scale linear generator with a coupled model of a two body, moored floating system to investigate the performance of a wave energy conversion system. An experiment was conducted using Oregon State University's wave energy Linear Test Bed to characterize the frictional and electromagnetic forces generated by the SeaBeavI linear generator. These force characteristics have been incorporated into the development of a coupled model using a numerical fluid-structure interaction simulation code, OrcaFlex, to predict the energy extraction potential of the system.***

## 1 INTRODUCTION

Modern ocean wave energy research began during the oil crisis of the 1970s. Much of the early work was conducted in Europe by Salter (Salter 1976) and Evans (Evans 1979) in England and Falnes (Falnes 2002) and Budal (Budal 1977) in Norway, amongst others. Several promising concepts were developed by 1980 including point absorber wave energy converters such as the infamous Salter duck (Salter 1976) and oscillating water column (OWC) devices. Point absorbers extract energy from ocean waves by capturing the mechanical energy from the dynamic response of one or more floating bodies. If energy is extracted from a single degree of freedom (DOF) these devices can extract at most 50% of the wave energy (Evans 1979). Oscillating water column systems gather energy from the waves by converting pneumatic pressure generated by waves rising and falling in a sealed chamber into electricity. Electricity is generated by using the changing wave level to generate air flow through a nozzle driving a Wells turbine (Curran R. 1997). Early work was also conducted on the optimal control of wave energy devices (Budal 1977) (Falnes 2002). By controlling the power take-off the natural frequency of the system could be varied keeping the system in resonance with the wave forcing.

Currently, several commercial developers are working to build full scale, grid connected wave energy conversion systems. These include the Limpet (WaveGen 2008) oscillating water column, the Pelamis (Pelamis Wave Power 2008) attenuating wave energy conversion system, and the Archimedes Wave Swing (Archimedes Wave Swing 2008). In the United States, Ocean Power Technologies (Ocean Power Technologies 2008) developed a point absorber wave energy conversion buoy for the US Navy that has been tested off Oahu, Hawaii. OPT has plans to deploy an array of point absorber buoys off the coast of Reedsport, Oregon representing the first grid connected wave-energy conversion plant in the United States.

Since 2000, innovative direct-drive generator technologies have been developed for use in wave-energy conversion by the Wallace Energy Systems & Renewables Facility at Oregon State University. These direct-drive generators use electro-magnetic coupling to convert the linear motion of ocean waves into electricity. By directly coupling the relative motion between a pair of floating bodies without intermediate hydraulics or pneumatics the electrical generation efficiency can be increased and the overall system simplified.

The SeaBeavI, a 1kW direct-drive wave-energy conversion system, was designed and built by researchers at Oregon State starting in the fall of 2006 (Prudell 2007). The SeaBeavI is a taut- moored, dual- body point absorber utilizing a linear generator for power take-off (Elwood 2009). The central spar is taut- moored to the bottom and holds the armature of the linear generator. The outer taurus shaped buoy is free to heave relative to the spar creating electricity as the magnet section moves relative to the copper wires in the armature. In October of 2007 the device was tested in the open ocean off Newport, Oregon. A rendering of the SeaBeavI is included as Figure 1.

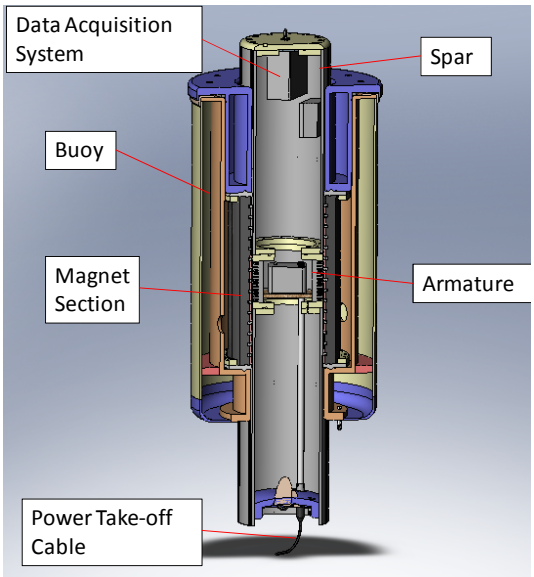


Figure 1 Rendering of spar and buoy general arrangement

## 2 ORCAFLEX

OrcaFlex is a coupled analysis numerical code designed to model the dynamics of offshore structures. The code has a range of capabilities from the modeling of mooring and riser systems to analysis of towed bodies and marine renewable energy systems. The coupled modeling technique used by OrcaFlex combines a finite element model of the flexible mooring and riser components with a rigid body representation of a floating system (Orcina Ltd. 2007). Hydrodynamic forces on the floating system and lines are calculated using a Morison model approach. Multiple floating bodies can be linked together using both linear and non-linear springs and dampers. A variety of wave models are available with both regular and stochastic waves.

## 3 PHYSICAL EXPERIMENTS

The wave energy Linear Test Bed (LTB) at the Wallace Energy Systems & Renewables Facility, shown in Figure 2, was used to test the permanent magnet linear generator to characterize the forces generated and determine the electrical efficiency of the machine. This testing provided force characteristics that were used as inputs to a coupled model of the system in OrcaFlex.

The LTB was designed and built by Mundt and Associates Inc. to evaluate direct drive wave energy conversion technologies. The test bed creates relative linear motion between the active components of the power conversion systems to simulate forces and velocities generated by a wave-energy converter. To test the permanent-magnet linear generator, the spar was fixed to a gimbaled base plate and constrained in the vertical direction. The magnet section was mounted to a gimbaled yolk coupled to a vertically translating carriage by two load cell arms. The carriage was driven by a belt-drive powered by an electric motor. This motor can be controlled via either a commanded position or force. The position of the carriage was recorded by the motor encoder and the force required to drive the carriage was measured by load cells in line with the connection between the magnet section and the carriage.

To allow for a range of sizes of devices to be tested on the LTB, three sets of load cells, each with a different maximum rating, can be used to measure the forces between device components. A set of two 22000 N load cells was installed on the load cell arms to test the SeaBeavI linear generator. The gain for the load cell signals was set by hanging a test weight from each load cell arm and measuring the voltage produced. Once the gain for each load cell had been set, the magnet section and yoke were hung from the load cell arms. The load cells were then zeroed with the weight of the yolk and magnet section as a static offset. In this way, the weight of the components was not

included in the measured force recorded during data acquisition.

To characterize the forces on the linear generator the force on the system was decomposed into those forces due to friction and those due to the electrical loading on the generator.

$$F_{Total} = F_{Frict} + F_{Gen} \quad (1)$$

where:

$F_{Total}$ is the total measured force

$F_{Frict}$ is the frictional force

$F_{Gen}$ is the generator force

This allowed for the forces to be modeled separately in OrcaFlex using a combination of springs and dampers.

## 4 LOAD CASES

Testing of the permanent magnet linear generator was conducted in two phases. The first phase of testing focused on characterizing the frictional forces between the spar and the magnet section. These forces were measured without placing an electrical load on the generator. In the second phase of testing, a series of fixed resistances was applied to the generator in order to measure the electromagnetic forces between the magnet section and the armature.

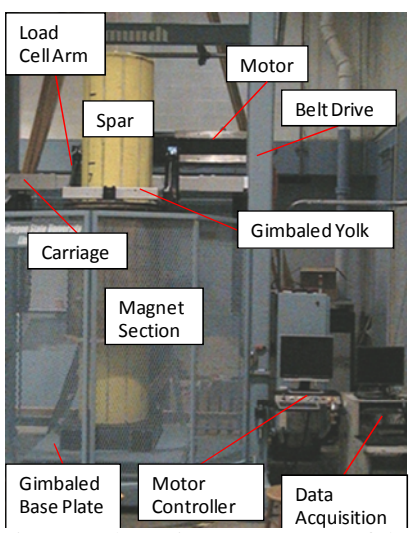


Figure 2 The active components of the permanent magnet linear generator mounted in OSU's wave energy Linear Test Bed

To characterize the frictional forces between the spar and the magnet section, a trapezoidal velocity profile was generated by the LTB. Six trials were completed with speeds ranging from .05 to .4 m/s. This low speed data allowed for the forces independent of velocity to be measured.

During trials to characterize the electromagnetic forces, the magnet section was driven with a sinusoidal velocity profile. A three-phase water rheostat was used to provide a fixed resistance for the generator. During each run, the resistance was varied to achieve a target average input power from the LTB. The voltage and current created by the generator could then be measured and the efficiency of the device calculated. The force between the magnet section and the spar was also measured to characterize the electromagnetic forces produced by the generator over a range of power levels.

For each trial, 14 channels of data were recorded with a sampling rate of 1 kHz. Data collected included: three phase voltage and current; position, velocity, and acceleration of the carriage; right load cell, left load cell and combined force from both load cells; and the input power to the LTB. For the trapezoidal velocity trials, 5 cycles at each velocity were recorded. Likewise 5 periods of data were recorded for each peak sinusoidal velocity profile.

## 5 CHARACTERIAZATION OF FRICTIONAL FORCES

The frictional forces between the spar and the buoy can be decomposed into the mechanical contact friction, the fluid shear forces due to the small gap between the buoy and the spar, and the electro-magnetic force between the generator components in the no-load condition:

$$F_{Frict} = F_C + F_F + F_{EM} \quad (2)$$

where:

$F_C$ is the contact friction force

$F_F$ is the fluid shear force

$F_{EM}$ is the no load electro-magnetic force

If the contact friction force is assumed to be Coulomb friction then the force can be expressed as a function of the normal force between the two bodies and the coefficient of friction of the bearing material:

$$F_C = \mu N \quad (3)$$

where:

$\mu$ is the coefficient of friction

N is the normal force

The electro-magnetic force between the buoy and spar in the no load condition is due to the core losses of the machine. The core loss is the sum of the magnetic hysteresis losses and the eddy current losses in the generator laminations (El-Hawary 1986):

$$F_{EM} = F_h + F_E \quad (4)$$

where:

$F_h$ is the force due to magnetic hysteresis

$F_E$ is the force due to eddy currents

The force due to the hysteresis is a function of the maximum magnetic flux density, the pole pitch, and the material properties of the magnets (El-Hawary 1986):

$$F_h = k_h \frac{1}{P} (B_m)^n \quad (5)$$

where:

$B_m$ is the maximum flux density

$P$ is the pole pitch of the armature

$k_h$ is a constant of the material

$n$ is determined from experiments and ranges from 1.5 to 2.5

The eddy current forces are also dependant on the maximum flux density, pole pitch and the material properties of the magnets. In addition the eddy current forces are also a function of the velocity of the generator and thickness of the generator laminations (El-Hawary 1986):

$$F_e = k_e \frac{V}{P} (B_m t)^2 \quad (6)$$

where:

$V$ is the generator velocity

$k_e$ is an empirical constant

$t$ is the thickness of the generator laminations

The force data from the trapezoidal velocity trials on the LTB was analyzed to determine the dry sliding friction and no-load electromagnetic force between the buoy and the spar. For each of the 5 cycles, the measured force was averaged over the constant velocity section. This averaging filtered out the magnetic cogging forces generated as each magnet passed between poles of the armature. Cogging is a conservative force that is generated by the gap between pole tips. As such it is not considered to be a frictional force and is neglected here.

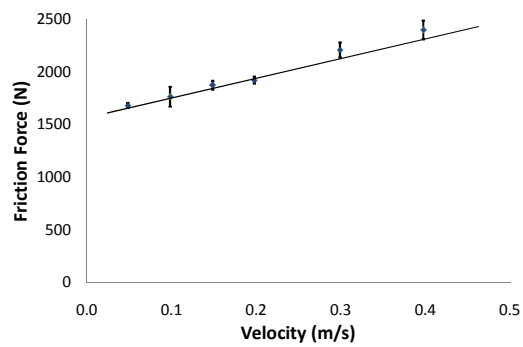


Figure 3 Average measured force between the magnet section and the spar as a function of velocity

Once the force data was filtered for each of the 5 cycles of each trapezoidal velocity, the average of all of the cycles was calculated. The error in the measurement was assumed to be 2 times the standard deviations of the 5 samples and ranged from +-23 N to +-93 N. As can be seen in Figure 3, the force increased with increasing velocity from just less than 1700 N at .05 m/s to slightly more than 2400 N at .4 m/s. The zero speed force offset is believed to be the sum of the contact friction force and the hysteresis force. The velocity dependant portion of the measured force is likely due to eddy current losses which are directly proportional to the generator velocity.

The measured force on the linear test bed was much greater than expected given the low friction material used to construct the linear bearings. The manufacturer-supplied friction coefficient for the bearing material is .1, and the theoretical normal force between the magnet section and the spar due to the magnetic forces is zero; assuming the spar is perfectly centered inside the magnet section. If the spar and magnet section are not perfectly concentric, however, the normal force between the magnets and the armature can become very large, potentially resulting in the higher than expected frictional force.

To enable effective magnetic force transmission between the buoy and the spar the gap between the two floating bodies was only 5mm. A commercial computational fluid dynamics code, StarCCM+ (CD-Adapco 2008), was used to estimate the hydrodynamic force due to the small gap between the spar and buoy.

A two-dimensional, laminar flow model was created in StarCCM+ to estimate the shear stresses on the outer wall of the spar and the inner surface of the magnet section. The governing equations for the model were the continuity equation and the Navier-Stokes equations for the x and y momentum. The solution domain was bounded by a fixed wall, an oscillating, a stagnation inlet, and a pressure outlet as seen in Figure 4. The pressure at the inlet and outlet of the domain was defined using linear wave theory as the pressure field under a monochromatic progressive wave at z=x=0:

$$P_{Inlet} = \rho g \frac{H}{2} \cos(\sigma t) \quad (7)$$

$$P_{Outlet} = -\rho g * (.15) + \rho g \frac{H}{2} \cos(\sigma t) \quad (8)$$

where:

$\rho$ is the fluid density

g is the gravitational acceleration

H is the wave height

$\sigma$ is the wave frequency

t is time

A no slip boundary condition was imposed on the fixed wall on the left side of the domain. The velocity of the oscillating wall was:

$$V_{wall} = \frac{H}{2} \sigma \cos(\sigma t) \quad (9)$$

This velocity assumes that the buoy is a perfect wave follower. The length of the solution domain was set to .15 m for computational efficiency.

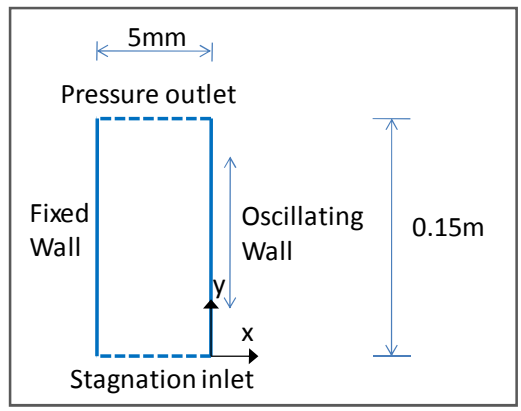


Figure 4 Solution domain defined in StarCCM+ to estimate the shear stress in the gap between the buoy and the spar

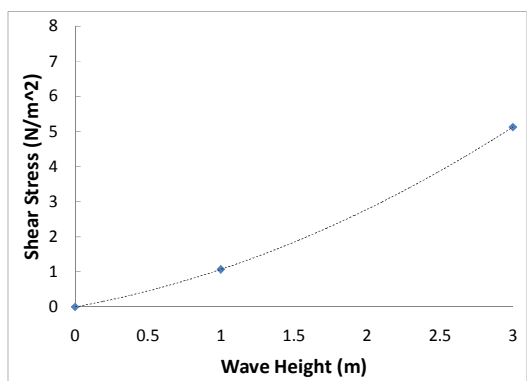


Figure 5 Shear stress on the oscillating wall as a function of the wave height

The shear maximum shear stress in the gap was estimated for two wave heights and two gap widths. As can be seen in Figure 5 the shear stress in the gap was proportional to the wave height squared. The shear stress was independent of the gap width over the range of gap widths investigated. With the as

built gap of 5mm the maximum shear stress on the oscillating wall was 5.1 N/m^2 corresponding to a total fluid shear force of 28.9 N. This fluid shear force is approximately 1.3% of the maximum force measured during the LTB experiments. The CFD results indicate that the fluid shear force in the gap between the spar and buoy is negligible when compared with the other frictional forces acting on the system. Further testing of the system in water is still required to validate these results.

## 6 CHARACTERIAZATION OF ELECTROMAGNETIC FORCES

The force data from sinusoidal velocity trials was used to characterize the electromagnetic force created by the generator while under load. For each peak speed, the fixed resistance was adjusted until the LTB input power reached the desired level. At each of the 5 peak velocities, the generator was run with a series of fixed resistances. The force data from each of these trials was processed using Matlab and the frictional force was subtracted from the total force. This allowed the relationship between electromagnetic force and velocity to be determined using a graphical approach. As can be seen in Figure 6, the relationship between force and velocity shows a force ripple due to the magnetic cogging generated as the permanent magnets passed by the poles of the armature.

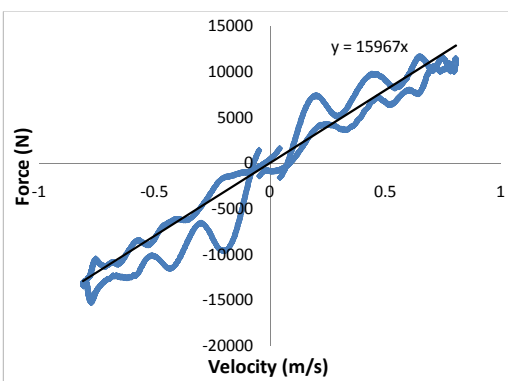


Figure 6 Relationship between force and velocity, .8 m/s peak sinusoidal velocity, 14.13 Ohm fixed resistance

Having established a linear relationship between electro-magnetic force and velocity over a range of fixed resistances, the generator force can be represented as a velocity dependent damping. The linearized damping can be expressed as a function of the fixed resistance to create a force characteristic for the linear generator. This force characteristic can be seen in Figure 7. The generator damping shows an inverse power relationship when plotted against the fixed resistance. Theory predicts that the exponent in this case should be -1. The deviation of the measured data from the theory may be due to the impedance of the linear generator.

The electromagnetic forces produced by the linear generator were larger than was anticipated. At its rated speed, the generator was able to produce approximately 5 times more power as was originally intended. Increased capacity led to larger forces under load, therefore the buoy and spar, as designed, were insufficient to drive the linear generator.

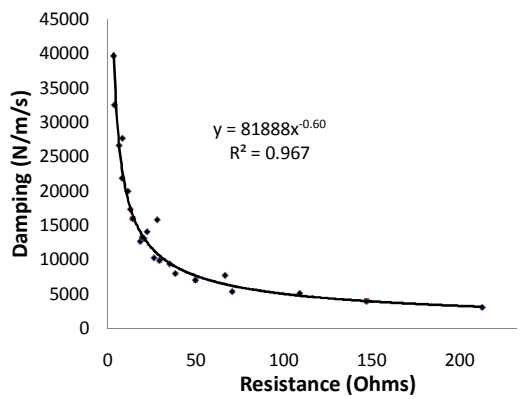


Figure 7 Linear generator damping coefficient as a function of the fixed resistance

## 7 SYSTEM CONFIGURATION

Initially, the as-built configuration of the SeaBeavI wave energy conversion system was modeled in OrcaFlex to investigate the performance of the system. It was quickly determined that the waterplane stiffness of the buoy was insufficient to provide the force required to drive the linear generator.

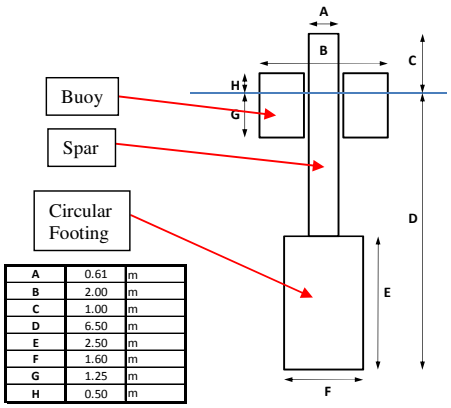


| | | |
|---|---|---|
| A | 0.61 | m |
| B | 2.00 | m |
| C | 1.00 | m |
| D | 6.50 | m |
| E | 2.50 | m |
| F | 1.60 | m |
| G | 1.25 | m |
| H | 0.50 | m |

Figure 8 Geometry of the resized SeaBeavI

Additionally, the excess buoyancy of the spar was not great enough to keep the mooring in tension during the down stroke of the buoy. The diameter of the buoy was increased, adding hydrostatic stiffness, and a circular footing was added to the spar in order to increase the pre-tension in the mooring. The geometry of the resized SeaBeavI is shown in Figure 8.

The mooring system connecting the spar to the ocean floor is a single tensioned leg composed of chain, spectra rope, and a mid-column float. The mooring used in the OrcaFlex model was made to accurately represent the as-designed mooring for the SeaBeavI wave energy conversion system.

## 8 LINEAR GENERATOR MODEL

To model the forces applied to the system by the linear generator, a linear damper was used to connect the spar and buoy in OrcaFlex. The damper exerts a force on the spar proportional to the relative velocity between the two floating bodies using the damping coefficients measured during the testing of the SeaBeavI linear generator. By using a linear damper, the generator model in OrcaFlex represents the generator running with a fixed resistive load. A generator using either current or voltage control could also be modeled using the combination of a non-linear spring and a non-linear damper in place of the linear damper. The damper used to model the linear generator can be seen in Figure 9.

## 9 CONTACT/FRICTION MODEL

The contact forces and friction between the spar and the buoy were modeled using four linear springs and a non-linear damper. Four linear springs were used to model the horizontal contact force between the bearing strips on the spar and the stainless steel tube on the buoy.

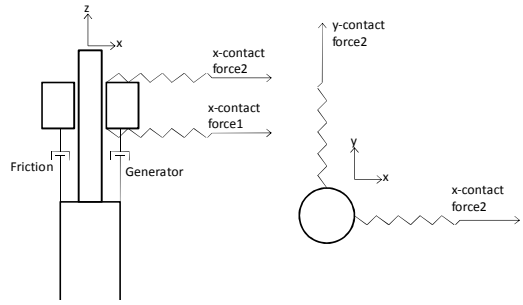


Figure 9 Springs and Dampers used to model the contact forces, friction, and generator force between the buoy and the spar

Two springs at the top of the buoy provided restraint in the x and y-directions with two similar springs at the bottom of the buoy. The springs were made to be very long and very stiff in order to provide horizontal restoring force without introducing any vertical forces. The springs used to model the contact force between the buoy and the spar can be seen in Figure 9.

The friction force between the buoy and the spar was modeled using a non-linear damper. The relationship between the force and the velocity in the non-linear damper was determined using the data collected from the Linear Test Bed. The shape of the friction characteristic is shown in Figure 10. The friction modeled using the non-linear damper is essentially coulomb friction except that the force is slightly velocity dependant due to electromagnetic effects.

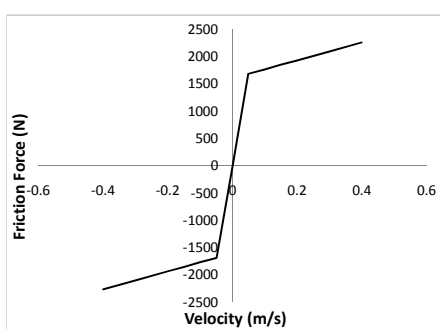


Figure 10 Characteristic of the non-linear damper used to model the friction between the buoy and the spar

## 10 LOAD CASES

The system's performance was investigated in regular waves in order to determine the effect of the generator forces on the performance of the system. Load cases included wave periods ranging from 4 to 9 seconds with wave heights from 0.5 to 2 meters. Those cases with steepness greater than 1/7 were not run since the waves would transition to breaking at this point and the wave theory employed would no longer be valid. For each wave height and period the linear damping coefficient of the generator was iterated until the damping value producing maximum mechanical power was found.

## 11 NUMERICAL RESULTS

An optimal value for the generator damping was found for each wave height and period. As can be seen in Figure 11, the power output versus damping has a clear maximum around 20 kN/(m/s). The shape of the power curve was consistent for all of the load cases investigated. The optimal generator damping decreased with increasing wave height as illustrated by Figure 12. There was an inverse relationship between the wave period and the optimal damping.

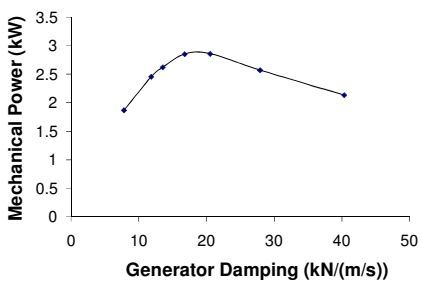


Figure 11 Relationship between generator damping and input generator power in a 2m, 8 second wave

The mechanical power produced by the system in regular waves increases linearly with increasing wave height. As the period of the wave is decreased at a given wave height the mechanical power increases up to the resonant frequency of the buoy as can be seen in Figure 13.

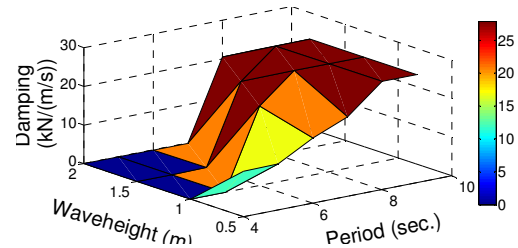


Figure 12 Relationship between the wave period, wave height, and optimal damping for the regular wave load cases

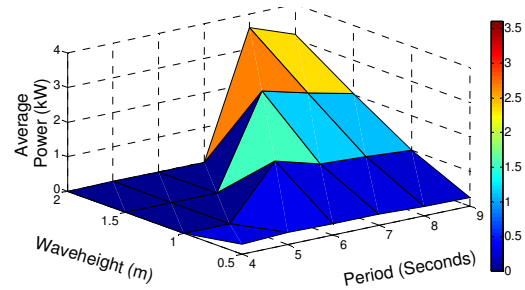


Figure 13 Average mechanical power produced in regular waves

## 12 CONCULSIONS AND FUTURE WORK

In this paper a method for modeling power take-off forces on a wave-energy conversion system by integrating data from physical experiments into a coupled numerical model has been presented. This model has been used to determine the effect of generator and frictional forces on the dynamics of a two body floating system and estimate the optimal damping and power output in regular waves.

The forces measured on the Linear Test Bed were decomposed into the frictional forces on the system and the forces due to electrical load on the generator. The frictional forces were further decomposed into contact friction force, no load electro-magnetic force, and a fluid shear force. The contact friction and no load electro-magnetic forces were measured on the LTB. The force due to the fluid shear stress was estimated using computational fluid dynamics and was found to be negligible compared to the other frictional forces.

Future work to determine the frictional coefficients of bearing materials operating in sea water and the normal forces on the system will help to refine contact friction model. Experiments to measure the frictional

forces in waves are also required to verify the predictions of the CFD analysis.

**AKNOWLEDGEMENTS**

This project would not have been possible without support from the Department of Energy and our industry partner Columbia Power Technologies. The second author also acknowledges partial financial support from the Office of Naval Research Grant Nos. N00014-04-10008 and N0014-07-10207.

**REFERENCES**

Archimedes Wave Swing. 6 June 2008 <http://awsocean.com/>.

Budal, K. "Theory for absorption of wave power by a system of interacting bodies." Journal of Ship Research (1977): 248-253.

CD-Adapco. STAR-CCM+. July 2008 <http://www.cd-adapco.com/products/STAR-CCM_plus/>.
Curran R., L.M.C Gato. "The energy conversion performance of several types of Wells turbine designs." Proceedings of the Institute of Mechnical Engineers (1997): 133-145.

Dean, Robert G., Darlrymple R.A. Water Wave Mechanics for Engineers and Scientists. Hackensack, NJ: World Scientific, 1991.

El-Hawary, Mohamed E. Principles of Electric Machines with Power Electronic Applications. Englewood Cliffs, NJ: Prentice-Hall, 1986.

Elwood, D., J. Prudell, C. Stillinger, A. Brown, A. von Jouanne, T. Brekken, Robert Pasch. "Design, Construction, and Ocean Testing of a Taut-Moored Dual-Body Wave Energy Converter with a Linear Generator Power Take-off." Proceedings of the 28th Annual Conferance on Offshore Mechanics and Arctic Engineering. Honolulu, Hawaii: ASME, (Submitted).

Evans, D.V. "Some theoretical aspects of three dimensional wave energy absorbers." Proceedings of the First Symposium on Wave Energy Utilization. Gothnburg, Sweden: Chalmers University of Technology, 1979. 77-106.

Falnes, J. Ocean Waves and Oscillating Systems. Cambridge, UK: Cambridge University Press, 2002.

Ocean Power Technologies. Ocean Power Technologies. 6 June 2008 <http://www.oceanpowertechnologies.com/> .

Orcina Ltd. "OrcaFlex Manual." Daltongate, UK: Orcina Ltd. (2006)

Pelamis Wave Power. Pelamis Wave Power. 6 June 2008 <http://www.pelamiswave.com>.

Prudell, J.H. "Novel design and implementation of a permanant magnet linear tubular generator for wave energy conversion." Masters Thesis. Corvallis, OR: Oregon State University, 2007.

Salter S.H., D.C. Jeffery, J.R.M. Taylor. "The architecture of nodding duck wave power generators." The Naval Architect (1976).

WaveGen. WaveGen. 6 June 2008 <http://www/wavegen.co.uk>.

# 4 Estimating the Energy Production Capacity of a Taut-Moored Dual-Body Wave Energy Conversion System Using Numerical Modeling and Physical Testing

David Elwood, Ean Amon,
Annette von Jouanne, Solomon Yim, Ted Brekken

Journal of Offshore Mechanics and Arctic Engineering

ASME International
3 Park Avenue 22S1
New York, NY 10016

**D. Elwood**
**S.C. Yim**

**School of Civil and Construction Engineering**
**Oregon State University**

**E. Amon**
**A. von Jouanne**
**T.K.A Brekken**

**School of Electrical Engineering and Computer Science**

# Estimating the Energy Production Capacity of a Taut-Moored Dual-Body Wave Energy Conversion System Using Numerical Modeling and Physical Testing

***This paper presents an innovative technique for evaluating the performance of direct-drive power take-off systems for wave energy devices using simulated force and velocity profiles. The performance of a linear generator was evaluated in a realistic operating condition using the results from a coupled model of a taut moored, dual body, wave energy conversion system as position input for Oregon State's wave energy Linear Test Bed. The experimental results from the Linear Test Bed can be compared with the predictions of the simulation and used to evaluate the efficiency of the generator.***

## 1 INTRODUCTION

Modern ocean wave-energy research began during the oil crisis of the 1970s. Much of the early work was conducted in Europe by Salter (Salter 1976) and Evans (Evans 1979) in England and Falnes (Falnes 2002) and Budal (Budal 1977) in Norway, amongst others. Several promising concepts were developed by 1980 including point absorber wave energy converters such as the infamous Salter duck (Salter 1976) and oscillating water column (OWC) devices. Point absorbers extract energy from ocean waves by capturing the mechanical energy from the dynamic response of one or more floating bodies. If energy is extracted from a single degree of freedom (DOF) these devices can extract at most 50% of the wave energy (Evans 1979). Oscillating water column systems gather energy from the waves by converting pneumatic pressure generated by waves rising and falling in a sealed chamber into electricity. Electricity is generated by using the changing wave level to generate air flow through a nozzle driving a Wells turbine (Curran R. 1997). Early work was also conducted on the optimal control of wave energy devices (Budal 1977) (Falnes 2002). By controlling the power take-off the natural frequency of the system could be varied keeping the system in resonance with the wave forcing.

Currently, several commercial developers are working to build full scale, grid connected wave energy conversion systems. These include the Limpet (WaveGen 2008) oscillating water column, the Pelamis (Pelamis Wave Power 2008) attenuating wave-energy conversion system, and the Archimedes Wave Swing (Archimedes Wave Swing 2008). In the United States, Ocean Power Technologies (Ocean Power Technologies 2008) developed a point absorber wave energy conversion buoy for the US Navy that has been tested off Oahu, Hawaii. OPT has plans to deploy an array of point absorber buoys off the coast of Reedsport, Oregon representing the first grid connected wave energy conversion plant in the United States.

The SeaBeavI, a 1kW direct-drive wave energy conversion system, was designed and built by researchers at Oregon State starting in the fall of 2006. The SeaBeavI is a taut moored, dual body point absorber utilizing a linear generator for power take-off (Prudell 2007). The central spar is taut moored to the bottom and holds the armature of the linear generator. The outer taurus shaped buoy is free to heave relative to the spar creating electricity as the magnet section moves relative to the copper wires in the armature. In October of 2007 the device was tested in the open ocean off Newport, Oregon. A rendering of the SeaBeavI is included as Figure 1.

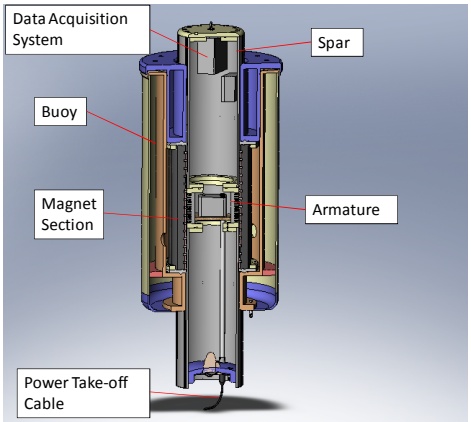


Figure 1 Rendering of spar and buoy general arrangement

## 2 SYSTEM CONFIGURATION

After testing of the SeaBeavI it was determined that the waterplane stiffness of the buoy was insufficient to provide the force required to drive the linear generator. Additionally, the excess buoyancy of the spar was not great enough to keep the mooring in tension during the down stroke of the buoy. The diameter of the buoy was increased, adding hydrostatic stiffness, and a circular footing was added to the spar in order to increase the pre-tension in the mooring. The geometry of the resized SeaBeavI is shown in Figure 2. As shown in the figure, the overall depth of the redesigned system was increased to 7.5 m with a maximum buoy diameter of 2 m. The displacement of the spar was increased to 6350 kg with a total spar mass of 1454 kg. This led to a design mooring pre-tension of 48029 N. The mooring system connecting the spar to the ocean floor is a single tensioned leg composed of chain, spectra rope, and a mid-column float.

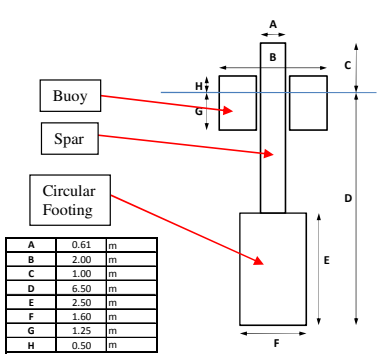


| | | |
|---|---|---|
| A | 0.61 | m |
| B | 2.00 | m |
| C | 1.00 | m |
| D | 6.50 | m |
| E | 2.50 | m |
| F | 1.60 | m |
| G | 1.25 | m |
| H | 0.50 | m |

Figure 2 Geometry of the resized SeaBeavI

## 3 ORCAFLEX MODEL

OrcaFlex is a coupled analysis numerical code designed to model the dynamics of offshore structures. The code has a range of capabilities from the modeling of mooring and riser systems to analysis of towed bodies and marine renewable energy systems. The coupled modeling technique used by OrcaFlex combines a finite element model of the flexible mooring and riser components with a rigid body representation of a floating system (Orcina Ltd. 2007). Hydrodynamic forces on the floating system and lines are calculated using a Morison model approach. Multiple floating bodies can be linked together using both linear and non-linear springs and dampers.

To calculate the response of the dynamic system, OrcaFlex solves the following equation of motion in the time domain (Orcina Ltd.):

$$M(d,a) + C(d,v) + K(d) = F(d,v,t) \qquad (1)$$

where

M(p,a) is the inertial load
C(p,v) is the damping load
K(p) is the system stiffness
F(p,v,t) is the external load
d, v, a are the displacement, velocity, and acceleration vectors
t is the simulation time

## 4 HYDRODYNAMIC MODEL

In order to calculate the hydrodynamic forces on the buoy and spar, OrcaFlex uses a modified form of the Morison equation originally developed to calculate wave forces on fixed cylinders. The primary difference between the classical Morison equation and the modified form used for floating bodies is that the relative velocity between the body and the fluid is used to calculate the damping force and the relative acceleration is used to calculate the added mass. The modified Morison equation used by OrcaFlex lead to the following expression for the wave forcing:

$$F_w = (\Delta a_w + C_a \Delta a_r) + {}^1\!/_2\, \rho V_r |V_r| C_D A \qquad (2)$$

where

$F_w$ is the wave force
$\Delta$ is the mass of water displaced by the body
$C_a$ is the added mass coefficient
$V_r$ is the fluid velocity relative to the body
$a_r$ is the fluid acceleration relative to the body
$\rho$ is the density of water
$C_D$ is the drag coefficient
A is the drag area

For analysis of the wave-energy conversion system, both the spar and buoy were modeled as spar buoys in OrcaFlex. This type of buoy is composed of a

vertical stack of cylinders each with its own added mass, damping, and drag properties. The inertial forces on each cylinder are calculated using user supplied axial and normal added mass coefficients. Likewise, the components of the force due to the fluid velocity are calculated using user supplied axial and normal unit damping forces. The instantaneous wetted surface of each cylinder is calculated for each time step and a correction factor is applied to the added mass and damping. This leads to the following expression for the added mass:

$$F_{x-AddedMass} = PW(\Delta_c A_x + C_{an}\Delta_c A_{rx}) \quad (3)$$
$$F_{y-AddedMass} = PW(\Delta_{cy} A_y + C_{an}\Delta_c A_{ry}) \quad (4)$$
$$F_{z-AddedMass} = PW(\Delta_c A_z + C_{aa}\Delta_c A_{rz}) \quad (5)$$

where

$PW$ is the proportion wet for the cylinder
$\Delta_c$ is the displaced mass of the cylinder when it is fully submerged
$A_x, A_{y,} A_z$ are the components of the fluid acceleration (buoy coordinates)
$A_{rx}, A_{ry}, A_{rz}$ are the components of the fluid acceleration relative to the buoy
$C_{aa}, C_{an}$ are the axial and normal added mass coefficients

Similarly the hydrodynamic damping on each cylinder is calculated using user supplied normal and axial unit damping forces:

$$F_{x-Damping} = PW * UDF_n * V_{rx} \quad (6)$$
$$F_{y-Damping} = PW * UDF_n * V_{ry} \quad (7)$$
$$F_{z-Damping} = PW * UDF_a * V_{rz} \quad (8)$$

where

$V_{rx}, V_{ry,} V_{rz}$ are the components of the fluid velocity relative to the buoy
$UDF_n, UDF_a$ are the user supplied normal and axial unit damping forces

The added mass and damping coefficients for the spar were based on experimental results (Chung 1993). Chung conducted a series of experiments to measure the heave added mass and damping of a surface piercing cylindrical buoy with a cylindrical base over a range of draft to diameter ratios. These empirical added mass and damping coefficients, input into OrcaFlex, can be found in the Appendix.

The added mass and damping coefficients for the buoy were based on the numerical results for a heaving circular cylinder in finite water depth (Bhatta 2007).The top of the circular footing of the spar was assumed to act like a false bottom and the distance between the bottom of the buoy and the top of the circular footing was taken as the water depth. This method assumes that the radiation and diffraction of the taurus shaped buoy heaving above a circular footing is equivalent to a buoy heaving with a water depth equal to the spacing between the footing and the bottom of the buoy. The added mass of the buoy in surge was determined using the analytical results for a circular cylinder (Newman 1977), and assumed to be a constant over the frequency range investigated. The added mass and damping coefficients used in the OrcaFlex model can be found in the Appendix.

## 5 MOORING MODEL

Lines are modeled in OrcaFlex using a finite element model. Each line is divided into a series of massless segments with a node at each end. These segments model the axial and torsional stiffness of the line while the mass, weight, and buoyancy of the line is incorporated into the end nodes. The bending stiffness of the line is represented by rotational springs linking the end nodes to the segment. Figure 3 shows the details of the line model with the three types of springs used to model the axial, torsional, and bending stiffness.

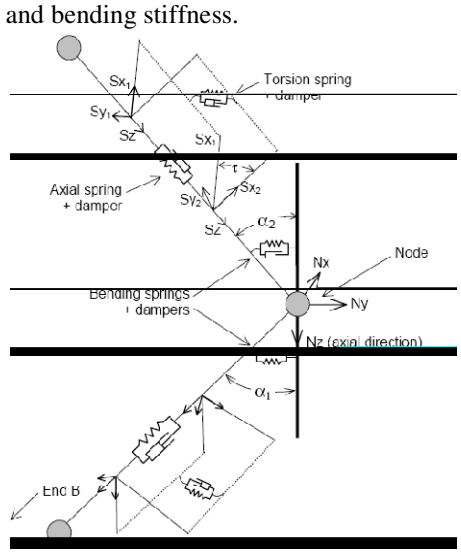


Figure 3 Graphical representation of OrcaFlex line model (Orcina 2006)

The mooring model created for the analysis of the resized SeaBeavI includes two lines and a subsurface float. The first line, connecting the subsurface float to the bottom, is 24 m long and is composed of 24 segments of uniform length. It is divided into two sections with the bottom 13 m of the line having the properties of 5/8” chain and the top 11 m modeling 5/8” spectra rope. The subsurface float is modeled as a 1 m diameter sphere allowed to translate, but fixed in rotation. A second line connects the subsurface

float to the spar and is 9.5 m long. This line has the properties of 5/8" spectra rope and is composed of 38 uniformly spaced segments.

## 6 WAVE MODEL

In order to understand the performance characteristics of the resized SeaBeavI wave energy conversion system, the response of the system was calculated in both regular and random waves. A model utilizing a Stokes 5th order wave theory was used to calculate the sea surface elevation along with the water particle velocities and accelerations for the simulations in regular waves. The spectrum used to generate the irregular waves was a modified Pierson-Moskowitz (ISSC) spectrum. The ISSC spectrum is defined in terms of the peak frequency ($f_m$) and the significant wave height ($H_s$):

$$S(f) = {}^{5}/_{16} H_s{}^2 f_m{}^4 f^{-5} e^{\left(-{}^{5}/_{4}\left({}^{f}/_{f_m}\right)^{-4}\right)} \quad (9)$$

where $f$ is frequency

## 7 GENERATOR AND FRICTION MODELS

The generator and frictional forces due to the linear generator were incorporated into the OrcaFlex model using four linear springs, a linear damper, and a non-linear damper. The force due to the load on the generator was represented using a linear damper. The damping coefficients used were based on force characterization experiments run on the linear test bed (Elwood 2008). The contact friction between the spar and the buoy was represented by four linear springs and a non-linear damper. The linear springs provided the normal force while the non-linear damper represented the sliding friction. The friction characteristic was developed based on the LTB force characterization experiments.

Table 1: Stochastic Sea States Modeled in OrcaFlex

| Hs(m) | Tp(s) | SS |
|---|---|---|
| 0.1 | 7.5 | 1 |
| 0.3 | 7.5 | 2 |
| 0.5 | 7.5 | 2 |
| 0.88 | 7.5 | 3 |
| 1.25 | 7.5 | 3 |
| 1.88 | 8.8 | 4 |
| 2.5 | 8.8 | 4 |
| 3.25 | 9.7 | 5 |
| 4 | 9.7 | 5 |
| 4 | 9.7 | 5* |
| 5 | 12.4 | 6* |

*Survival Condition

## 8 LOAD CASES

The load cases investigated were selected to represent the range of design operating conditions for the device. The resized SeaBeavI was designed to operate in conditions up to sea state 5 and survive in up to a sea state 6. As such, the range of stochastic sea states investigated ranged from a 0.1m significant wave height with a 7.5 second peak period (SS1) to a 5m significant wave height with a 12.4 second peak period (SS6). Table 1 provides a list of the stochastic sea states simulated.

## 9 NUMERICAL RESULTS

The power captured by the device in stochastic seas increases proportional to the square of the significant wave height up to a wave height of 1.25m. Beyond 1.25m, the power increases linearly up to the operating limit of the device and then drops off considerably. In the survival condition, the mooring is slack allowing the spar and buoy to ride over the large waves. This reduces the relative motion between the two bodies and the power captured by the system. Figure 4 provides a plot of the power as a function of the significant wave height.

A standard measure used to evaluate the efficiency of wave energy conversion systems is the capture width. The capture width is defined as the ratio of the power captured by the device to the wave power per unit crest length:

$$C = \frac{P_c}{\frac{1}{8}\rho g H_{RMS}{}^2 C_g} \quad (10)$$

$$C_g = \frac{g T_P}{4\pi} \quad (11)$$

$$H_{RMS} = \frac{H_{1/3}}{\sqrt{2}} \quad (12)$$

where:

$P_c$ is the mechanical powercaptured by the device
$g$ is the gravitational acceleration
$H_{RMS}$ is the RMS wave height
$C_g$ is the deep water group velocity
$T_P$ is the peak period
$H_{1/3}$ is the significant wave height

For the resized SeaBeavI, the capture width as a function of significant wave height is maximized for a significant wave height of 1.25m. Figure 5 provides a plot of the relationship between the significant wave height and the capture width.

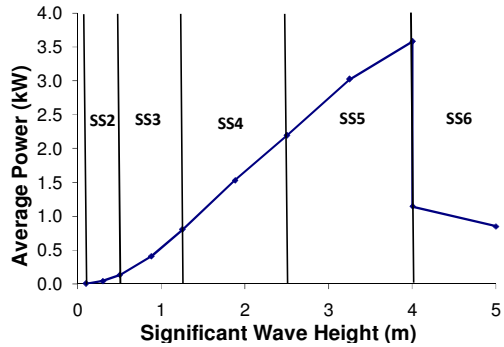


Figure 4 Mechanical power captured by the device as a function of the significant wave height

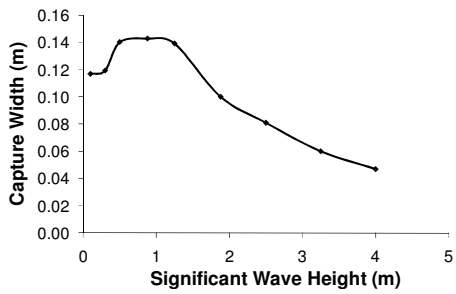


Figure 5 Relationship between the significant wave height and the capture width for the resized SeaBeavI wave energy conversion device

## 10 PHYSICAL EXPERIMENTS

The wave energy Linear Test Bed (LTB) at the Wallace Energy Systems & Renewables Facility, shown in Figure 6, was used to determine the efficiency of the permanent magnet linear generator in a realistic operating condition.

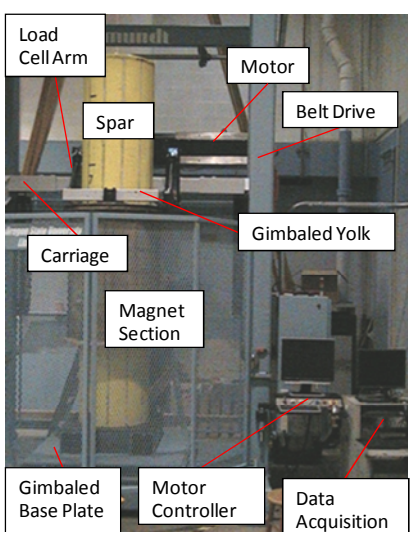


Figure 6 The active components of the permanent magnet linear generator mounted in OSU's wave energy Linear Test Bed

Results from the simulation of the resized SeaBeavI system were used to generate 15 minute time series of the relative motion between the spar and buoy to be used as position inputs to the LTB. The sea states were selected to evaluate the performance of the linear generator over its design operating range within the limits of the LTB. Due to displacement and force limits, the maximum simulated operating condition was a 2.5 m significant wave height at a peak period of 8.8 seconds. Table 2 gives the details of the simulated time series used to drive the generator on the LTB.

Testing conditions while running the simulated time series were nearly identical to those used for the force characterization of the generator (Elwood 2008). Loading of the generator was accomplished using a three phase water rheostat and no modifications were made to the sliding surfaces. After several hours of testing, the bearing strips were worn. In some cases the stainless steel tube enclosing the magnet section was rubbing directly against the outer shell of the spar. As a result, bearing wear may have led to increased frictional forces during the testing.

Table 2: Test cases run on the LTB to determine the operating efficiency of the permanent magnet linear generator

| Run | Wave Height | Period | Sea State | Resistance |
|---|---|---|---|---|
| non-dim | m | s | non-dim | Ohms |
| 1 | 0.5 | 7.5 | 2 | 3.25 |
| 2 | 0.88 | 7.5 | 3 | 6 |
| 3 | 1.88 | 8.8 | 4 | 6 |
| 4 | 2.5 | 8.8 | 4 | 6 |

## 11 MODEL VALIDATION

Comparisons of the simulated time series and the measured data from the LTB have been performed in order to evaluate the accuracy of the coupled model. The error between the simulation speed and the speed generated by the test bed verified that the motor controller generated the commanded position accurately. To validate the modeling approach used to represent the generator and frictional forces in the coupled model force data from the Linear Test Bed was compared with the simulation results. The power input to the device during the LTB experiments was also compared with the mechanical power predictions from the simulation.

The data collected from the Linear Test Bed and the results of the numerical modeling were first compared graphically to evaluate the general agreement of the two data sets (see Figure 7). Error estimates for each of the quantities of interest were calculated by comparing the statistics of the simulation time series with the measured data from

the LTB. Average relative error was calculated by integrating the instantaneous error over the length of the time series:

$$AverageError = \frac{1}{T}\int_0^T \left|\frac{X_s - X_e}{X_e}\right| dt \quad (13)$$

where:

T is the length of the time series

$X_s$ is the simulation value

$X_e$ is the experimental value

Error analysis indicates that the motor controller on the linear test bed accurately recreated the simulated displacement on the LTB. The large force errors are likely due to a phase shift between the force measured on the test bed and the simulated force. This phase shift may be due to stiffness of the belt drive system or the load cell arms on the LTB. The error in the average power and the total energy was much lower than the force error ranging from 3.5-16.5%.

## 12 SYSTEM EFFICIENCY AND OPERATING LIMITS

In the resized SeaBeavI system, there are both mechanical losses due to the sliding friction between the moving components and electromagnetic losses in the generator. One of the primary goals of the coupled analysis of the system was to be able to determine the losses associated with each of the components of the system and determine which areas could be improved to benefit the system as a whole. Force and velocity data were used to determine the total mechanical power applied by the Linear Test Bed to the device. The power dissipated due to frictional losses in the bearing system was subtracted from the total power to determine the input power into the linear generator. The voltage and current measurements from the linear generator were then used to calculate the electrical power generated in order to determine the electrical efficiency.

To quantify the efficiency of the bearing system and the linear generator, the input and output power from each system were compared. The frictional force could not be measured directly so it was assumed based on the friction characteristic developed during the force characterization experimental on the LTB (Elwood 2008). Calculation of the efficiency used the following definitions for the bearing and generator efficiency:

$$Eff_{bearing} = \frac{(Power_{Mech} - Power_{Frict})}{Power_{Total}} \quad (14)$$

$$Eff_{gen} = \frac{Power_{Gen}}{(Power_{Mech} - Power_{Frict})} \quad (15)$$

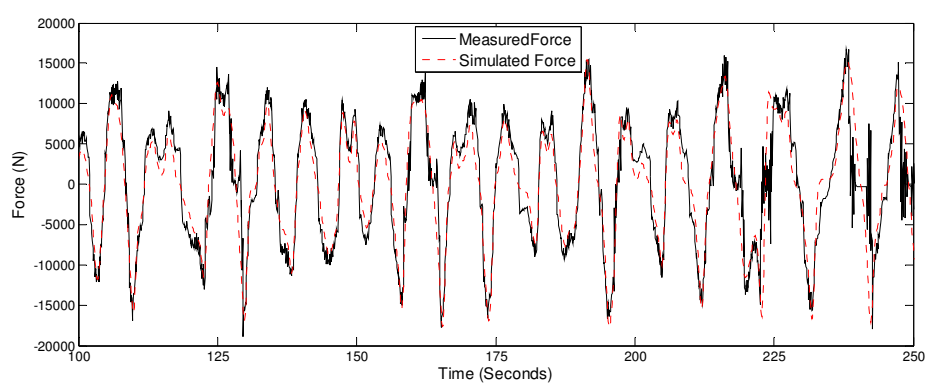


Figure 7 The sum of the frictional and electromagnetic forces in a 2.5m Hs 8.8 sec. wave climate

Table 3 Relative error between experimental measurements and OrcaFlex simulation

| | | Average Relative Error Between OrcaFlex and Measured Data | | | |
|---|---|---|---|---|---|
| Run | Hs | Position | Force | Average Power | Total Energy |
| non-dim | m | non-dim | non-dim | non-dim | non-dim |
| 1 | 0.5 | 0.11% | 70.57% | 16.33% | 16.60% |
| 2 | 0.88 | 0.05% | 46.54% | 5.27% | 5.41% |
| 3 | 1.88 | 0.14% | 91.94% | 13.62% | 13.51% |
| 4 | 2.5 | 0.37% | 136.13% | 3.57% | 3.68% |

Table 4 Average bearing and generator efficiency as measured on the LTB

| | | Bearing | Generator |
|---|---|---|---|
| Run | Hs | Average Efficiency | Average Efficiency |
| non-dim | m | non-dim | non-dim |
| 1 | 0.5 | 53.14% | 40.94% |
| 2 | 0.88 | 66.97% | 56.37% |
| 3 | 1.88 | 75.53% | 54.70% |
| 4 | 2.5 | 76.58% | 55.03% |

Efficiency of the bearing system and the linear generator were calculated using equations 17 and 18 and plotted to identify efficiency trends over the operating range. As can be seen in Figure 8, the bearing efficiency increased with increasing significant wave height. Conversely, the generator efficiency was fairly constant over the range of operating conditions investigated (Figure 9).

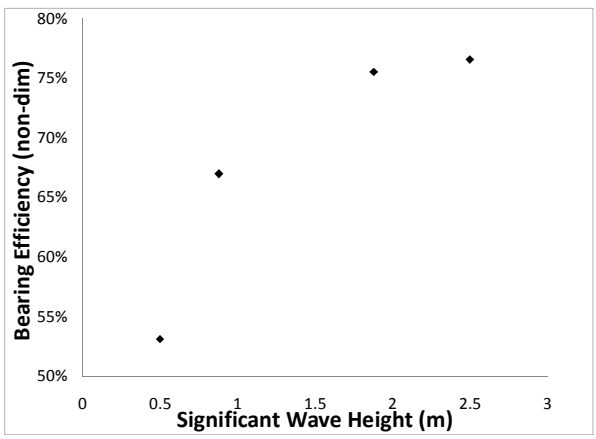


Figure 9 Measured bearing efficiency as a function of simulation wave height

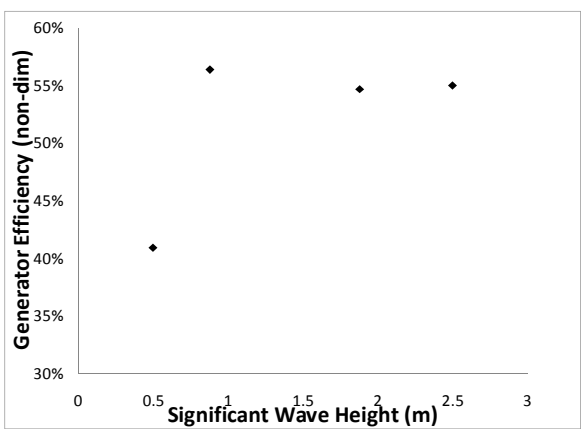


Figure 8 Measured generator efficiency as a function of simulation wave height

## 13 POWER CURVE AND OPERATING LIMITS

To estimate the power generation potential of the resized SeaBeavI system, a power curve was developed based on the data collected on the Linear Test Bed. A maximum operating limit was set for the device based on the limits of the tensioned mooring system. In a significant wave height greater than 4 m, the pretension in the mooring is insufficient to keep the line in tension during the down stroke of the buoy. When the significant wave height exceeds 4 m, the tension in the mooring system will be released, allowing the spar and buoy to move together over the waves. In this condition, there is still relative motion between the two floating bodies but the input power to the generator is reduced significantly. A significant wave height of .5 m was set as the lower operating limit based on the power produced during the Linear Test Bed testing.

Due to the limits of the Linear Test Bed, the bearing and generator performance was extrapolated above 2.5 m significant wave height. This extrapolated data is represented by the dotted lines in Figure 10. The bearing and generator efficiencies were assumed to remain constant from 2.5 m Hs up to the operating limit of 4.0 m Hs. This assumption is based on the efficiency curve of the linear generator which is essentially constant for significant wave heights greater than .5 m. Likewise, the efficiency curve for the bearing system reaches an asymptote for significant wave heights exceeding 2 m.

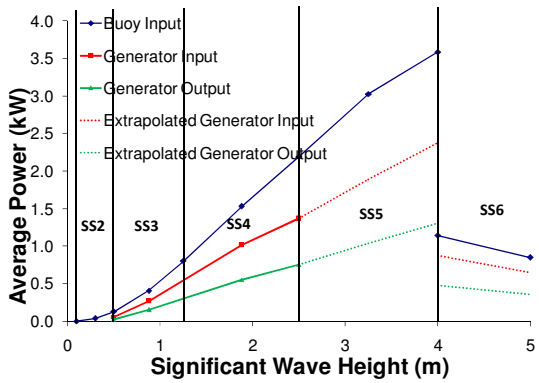


Figure 10 Power curves for the resized SeaBeavI wave energy conversion system

## 15 ANNUAL ENERGY PRODUCTION OFF NEWPORT, OREGON

The seasonal variation in significant wave height was determined using historical data from the NDBC station over Stonewall Banks, 16 nm West of Newport, Oregon (NOAA 2008). From 1999-2004 the average daily wave height over the banks ranged from just over 1 m in mid-August to almost 5 m in the beginning of March.

The annual energy production for the SeaBeavI operating at the OSU test site was determined using the data gathered on the wave climate off of Newport and the power curve developed for the resized device. The daily average significant wave height was used to predict the average daily energy production as seen in Figure 11.

The maximum average production predicted for the device is 32.5 kWh per day during late February. The minimum energy production occurs in mid-August when the significant wave height drops to just over 1 m. It should also be noted that there are several days in March with low energy production due to wave heights exceeding the operating limits of the device. By integrating the daily average over the course of a year the annual average energy production of the device was found to be 6322 kWh per year.

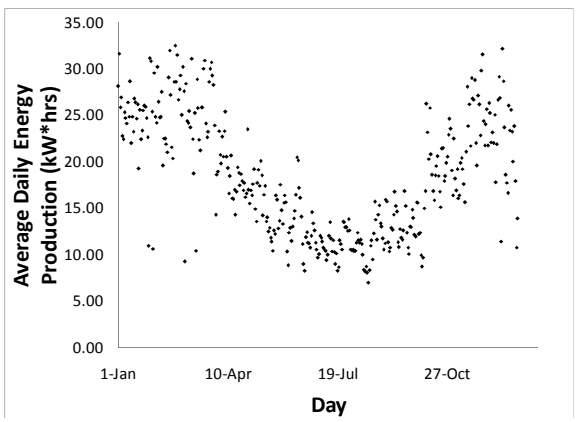


Figure 11 Resized SeaBeavI daily average energy production at Newport, Oregon test site

## 16 CAPACITY FACTOR

The capacity factor of a power plant is the ratio of the actual power produced over a period of time to the power it would have produced had it operated at its nameplate rating over the same period. The capacity factor for the SeaBeavI can be defined as:

$$CF = \frac{E_{actual}}{Power_{nameplate} * 365 * 24} \quad (16)$$

where:

$E_{actual}$ is the actual annual energy produced
$Power_{nameplate}$ is the nameplate rating of the system

To calculate the capacity factor of the resized SeaBeavI, a name plate rating for the linear generator must be determined. This rating can be based either on the maximum operating condition of the wave energy system or calculated using the design current rating of the armature wires. The current rating can be used to determine the power generated at the rated current and the root mean squared velocity in the maximum operating condition. The rating of the device can be defined in this way as:

$$Power_{rnameplate} = I_{rated} V_{rated} \quad (17)$$

where:

$I_{rated}$ is the rated current
$V_{rated}$ is the rated voltage

Assuming a current rating of 4.68 amps and a voltage rating of 600 volts, the nameplate power of the generator is 2.81 kW. Another nameplate rating definition is the power output at the maximum operating point of the system. For the resized SeaBeavI linear generator, this maximum power output is 1.31 kW in a 4 m Hs, 9.7 Tp sea state. Using these two definitions for the nameplate rating, the capacity factor of the device is .27 and .59 respectively.

## 17 CONCLUSIONS AND FUTURE WORK

A coupled fluid structure interaction model of a wave energy conversion system was developed using OrcaFlex. This model was used to investigate the performance of the system over a range of operating conditions. The added mass and damping coefficients for the floating bodies were based on previous experimental and numerical results. The modeled generator loads were based on the results of force characterization experiments performed on the linear generator. OrcaFlex proved to be a capable tool for the modeling of wave energy conversion systems.

The energy production capacity of the resized SeaBeavI was determined by using simulated displacement time series from OrcaFlex to actuate the permanent magnet linear generator on the Linear Test Bed. The results of these experiments were used to develop a power curve for the device. This power curve was then used to calculate the power that could be produced given the historical wave climate off the coast of Newport, Oregon. The results of this analysis indicate that the capacity factor of the device is between .27 and .59 assuming that the device does not have to be serviced. These capacity factors are very similar to other renewable energy systems.

More work is required to refine the hydrodynamic coefficients used to model the hydrodynamics of the floating bodies in OrcaFlex. Physical experiments are

required to verify the simulation results and help to refine these coefficients. A theoretical investigation of the hydrodynamics of concentric heaving bodies would enable new analytical tools to be developed that could help to optimize the configuration of the floating system. Some of this work has already been completed for concentric bodies with a large gap (Mavrakos 2004), but more work is required to extend the results to concentric bodies with small gaps.

## AKNOWLEDGEMENTS

This project would not have been possible without support from the Department of Energy and our industry partner Columbia Power Technologies for their support of our research.

## REFERENCES

Archimedes Wave Swing. 6 June 2008 <http://awsocean.com/>.

Budal, K. "Theory for absorption of wave power by a system of interacting bodies." Journal of Ship Research (1977): 248-253.

Chung J., G.M Hulbert. "A time integration algorithm for structural dynamics with improved numerical dissapation: The generalized-alpha method." Journal of Applied Mechanics (1993): 371-375.

Chung, J.S. "Added mass and damping of an oscillating circular column with a circular footing." International Journal of Offshore and Polar Engineering (1994): 11-17.

Curran R., L.M.C Gato. "The energy conversion performance of several types of Wells turbine designs." Proceedings of the Institute of Mechnical Engineers (1997): 133-145.

Elwood, D., E. Amon, S. Yim, A. von Jouanne, T.K.A Brekken. "Experimental Force Characterization and Numerical Modeling of a Taut-Moored Dual-Body Wave Energy Converter." Journal of Offshore Mechanics and Arctic Engineering (Submitted).

Elwood, D., J. Prudell, C. Stillinger, A. Brown, S. Yim, A. von Jouanne, T. Brekken, R. Paasch. "Design, Construction, and Ocean Testing of a Taut-Moored Dual-Body Wave Energy Converter with a Linear Generator Power Take-off." Proceedings of the 28th Annual Conferance on Offshore Mechanics and Arctic Engineering. Honolulu, Hawaii: ASME, (Submitted).

Evans, D.V. "Some theoretical aspects of three dimensional wave energy absorbers." Proceedings of the First Symposium on Wave Energy Utilization. Gothnburg, Sweden: Chalmers University of Technology, 1979. 77-106.

Falnes, J. Ocean Waves and Oscillating Systems. Cambridge, UK: Cambridge University Press, 2002.

Mavrakos, S.A. "Hydrodynamic coefficients in heave of two concentric surface-piercing truncated circular cylinders." Applied Ocean Research (2004): 84-97.

Newman, J.N. Marine Hydrodynamics. Cambridge, MA: The MIT Press, 1977.

NOAA. National Data Buoy Center. 6 June 2008 <http://www.ndbc.noaa.gov/>.

Ocean Power Technologies. Ocean Power Technologies. 6 June 2008 <http://www.oceanpowertechnologies.com/>.

Orcina Ltd. "OrcaFlex Manual." Daltongate, UK: Orcina Ltd. 2006.

Pelamis Wave Power. Pelamis Wave Power. 6 June 2008 <http://www.pelamiswave.com>.

Prudell, J.H. "Novel design and implementation of a permanant magnet linear tubular generator for wave energy conversion." Masters Thesis. Corvallis, OR: Oregon State University, 2007.

Salter S.H., D.C. Jeffery, J.R.M. Taylor. "The architecture of nodding duck wave power generators." The Naval Architect (1976).

WaveGen. WaveGen. 6 June 2008 <http://www/wavegen.co.uk>.

## APPENDIX

In order to accurately model the hydrodynamic forces on the buoy and spar, values of $C_{aa}$, $C_{an}$, $UDF_n$, and $UDF_a$ must be determined for each of the floating bodies. As can be seen in Figure A.1, the added mass of the buoy is constant while the damping varies with wave frequency.

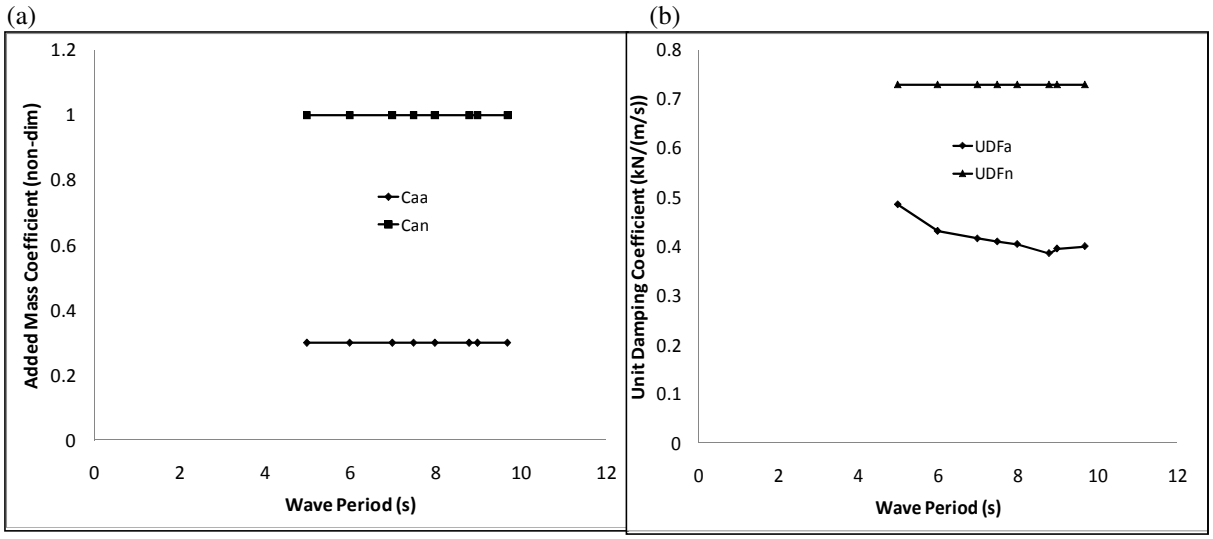


Figure A.1 (a) Axial and normal added mass coefficients for the buoy (b) Axial and normal unit damping forces for the buoy

Likewise for the spar the added mass is constant over the frequency range investigated while the heave damping is directly proportional to the wave frequency. Figure A.2 provides graphs of the added mass and damping coefficients used in OrcaFlex.

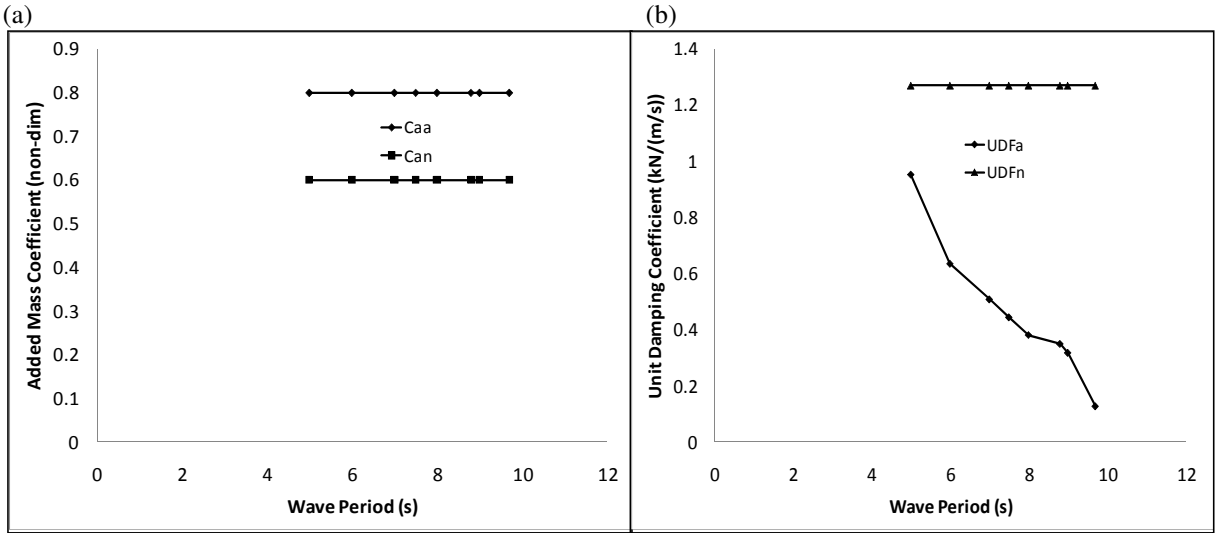


Figure A.2 (a) Axial and normal added mass coefficients for the spar (b) Axial and normal unit damping forces for the spar

# 5 Conclusions

## 5.1 Lessons Learned from the design and testing of SeaBeavI

After the ocean testing of the SeaBeavI, members of the research team contributed to a "lessons learned" document that has been included as appendix 5. Many design improvements were suggested ranging from better watertight enclosures to enhanced data acquisition systems. There were also many lessons learned concerning the logistics of testing a prototype wave energy device in the open ocean. From this experience, a set of research questions was identified to improve the design of future devices.

One of the primary problems encountered during the ocean testing was binding between the spar and the buoy. Several potential causes for this binding have been suggested including tolerance issues, misalignment leading to high magnetic normal forces, viscous effects, and blistering of the stainless steel tube enclosing the magnet section. Computational fluid dynamics analysis was conducted to determine the viscous force generated by the relative motion between the buoy and the spar in the gap between the two moving bodies. The numerical results indicate that the viscous force is only 1.5% of the total friction measured on the LTB in a 3m wave height. This indicates that the viscous forces did not significantly contribute to binding between the spar and the buoy.

After testing was completed, large blisters were noted on the stainless steel tube protruding inward from the inner diameter of the magnet section. Measurements of the outer diameter of the armature and the height of the blisters indicate that they would have caused an interference fit between the buoy and the spar. This interference was likely a primary cause of the large frictional forces measured in the LTB that contributed to the binding observed in the ocean. The

measurements of the outer diameter of the spar also indicate that the design tolerances were not achieved during construction. This could easily have led to misalignment, large magnetic normal forces, and increased friction.

During testing, the watertight integrity of both the buoy and the spar was compromised leading to ingress of seawater into both floating bodies. Potential leak paths into the buoy included the o-rings at the top and bottom of the magnet section and the bolt pattern for the buoy lid. On the spar, potential leak paths through the top cover blot pattern and the mooring attachment point could have allowed water to enter both the bottom ballast tank and the electronics compartment. In future designs, all potential leak points should be identified and tested prior to putting the system into the ocean.

The tensioning system designed for use with the SeaBeavI did not perform as expected during the testing of the device. Without an operational tensioning system, it was not possible to install the system on a tensioned mooring in order to provide the reaction force required for power generation. Designing a more effective tensioning system is important for the successful testing of future tension moored systems.

Many lessons were learned during the SeaBeavI testing about the logistics of testing a wave energy device in the open ocean. These lessons included operating procedures for cranes, effective towing techniques, and safety protocols. Due to the weight of the SeaBeavI, the device was not able to be installed using the ship's crane on the Pacific Storm. As a result, a towing arrangement for the system was designed and tested during the deployment of the device in the open ocean. Thanks to the success of the towing operation, future devices can be designed to be towed from the bay into the open ocean for installation. The floats attached to the power take-off cable also proved to be an effective means of ensuring the cable was neutrally buoyant. Having the ability to stage the PADA in

the wet lab of the Pacific Storm enabled researchers to analyze data from a secure location.

## 5.2 Efficiency of the resized SeaBeavI WEC

Using data collected during the physical testing of the SeaBeavI linear generator and numerical modeling of the resized floating system using OrcaFlex, both the hydrodynamic and electromagnetic efficiency of the system were determined. The peak hydrodynamic efficiency of the system was found to be 7% in a .88 m Hs, 7.5 sec. Tp sea state. In this operating condition, the bearing efficiency was measured to be 67% and the linear generator efficiency measured was 56%. Overall the resized system is capable of extracting 2.7% of the available power from the ocean waves in its most efficient operating condition. The overall system efficiency over the range of operating conditions investigated can be found in table 5.1.

5.1 System efficiency of the resized system over a range of operating conditions

| Hs(m) | Tp(s) | SS | Hydrodynamic Efficiency | Bearing Efficiency | Generator Efficiency | System Efficiency |
|---|---|---|---|---|---|---|
| 0.5 | 7.5 | 2 | 7.03% | 53.14% | 40.94% | 1.53% |
| 0.88 | 7.5 | 3 | 7.16% | 66.97% | 56.37% | 2.70% |
| 1.88 | 8.8 | 4 | 5.02% | 75.53% | 54.70% | 2.07% |
| 2.5 | 8.8 | 4 | 4.06% | 76.58% | 55.03% | 1.71% |
| 3.25 | 9.7 | 5 | 3.01% | 76.58% | 55.03% | 1.27% |
| 4 | 9.7 | 5 | 2.35% | 76.58% | 55.03% | 0.99% |

While the overall efficiency of the system is low, the estimated capacity factor of the device operating at the OSU test site off Newport, Oregon was found to be between .39 and .59. This capacity factor is very similar to current wind energy devices. Optimizing the shape of the buoy could increase the hydrodynamic efficiency of the system. The bearing efficiency could also be increased through better manufacturing processing and use of low friction materials. The generator efficiency measured in a realistic operating condition indicates that a linear generator has the potential to efficiently convert the relative motion between the buoy and the spar into electricity.

## 5.3 Future Work

Using the lessons learned from the 2007 ocean testing of the SeaBeavI system, an improved system , the SeaBeavII, utilizing the same linear generator is currently being designed and built for a planned ocean deployment in the late summer of 2008. In support of this project, research is being conducted on bearing materials that can be used to reduce the sliding friction between the buoy and spar and decrease the potential for binding between the two floating bodies. Work is also planned to optimize the shape of the buoy to increase the hydrodynamic efficiency of the system. An alternative tensioning system is being designed which will enable testing of the system with a tensioned mooring. The buoy and spar have also been redesigned to provide enough waterplane stiffness in the buoy and excess buoyancy in the spar to produce 3.5 kW in an average summer sea state.

The coupled analysis technique developed in this thesis to model the generator and floating system will continue to be used to evaluate future direct drive concepts moving toward the development of a utility scale device. Data from the ocean testing of the SeaBeavII along with scaled model tests to be performed at OSU's OH Hinsdale Wave Research Laboratory will be used to calibrate the hydrodynamic model in OrcaFlex. Displacement times series developed using OrcaFlex will continue to be used as inputs to the Linear Test Bed during the testing of prototype devices.

# BIBLIOGRAPHY

Agamloh E.B., Wallace A.K, and von Jouanne A. "Application of fluid-structure interaction simulation of an ocean wave energy device." Renewable Energy (2006): 748-757.

Agamloh, E.B. "A direct-drive wave energy converter with contact-less force transmission system." Ph.D Dissertation. Corvallis, OR: Oregon State University, 2005.

Archimedes Wave Swing. 6 June 2008 <http://awsocean.com/>.

Bhatta, D. "Computation of added mass and damping coefficients due to a heaving cylinder." Journal of Applied Methematics and Computing (2007): 127-140.

Budal, K. "Theory for absorption of wave power by a system of interacting bodies." Journal of Ship Research (1977): 248-253.

CD-Adapco. STAR-CCM+. July 2008 <http://www.cd-adapco.com/products/STAR-CCM_plus/>.

Chung J., G.M Hulbert. "A time integration algorithm for structural dynamics with improved numerical dissapation: The generalized-alpha method." Journal of Applied Mechanics (1993): 371-375.

Chung, J.S. "Added mass and damping of an oscillating circular column with a circular footing." International Journal of Offshore and Polar Engineering (1994): 11-17.

Curran R., L.M.C Gato. "The energy conversion performance of several types of Wells turbine designs." Proceedings of the Institute of Mechnical Engineers (1997): 133-145.

David Elwood, Ean Amon, Solomon Yim, Annette von Jouanne, Ted Brekken. "Experimental Force Characterization and Numerical Modeling of a Taught Moored, Dual Body, Wave Energy Converter." Journal of Offshore Mechanics and Arctic Engineering (2008).

David Elwood, Joe Prudell, Chad Stillinger, Adam Brown, Annette von Jouanne, Ted Brekken, Robert Pasch. "Design, Construction, and Ocean Testing of a Taught Moored, Dual Body Wave Energy Conversion System." Proceedings of the 28th Annual Conferance on Offshore Mechanics and Arctic Engineering. Honolulu, Hawaii: ASME, 2009.

Dean, Robert G., Darlrymple R.A. Water Wave Mechanics for Engineers and Scientists. Hackensack, NJ: World Scientific, 1991.

El-Hawary, Mohamed E. Principles of Electric Machines with Power Electronic Applications. Englewood Cliffs, NJ: Prentice-Hall, 1986.

Elwood, D., E. Amon, S. Yim, A. von Jouanne, T. Brekken. "Experimental Force Characterization and Numerical Modeling of a Taught Moored, Dual Body, Wave Energy Converter." Journal of Offshore Mechanics and Arctic Engineering (2008).

Elwood, D., J. Prudell, C. Stillinger, A. Brown, A. von Jouanne, T. Brekken, Robert Pasch. "Design, Construction, and Ocean Testing of a Taught Moored, Dual Body Wave Energy

Conversion System." Proceedings of the 28th Annual Conferance on Offshore Mechanics and Arctic Engineering. Honolulu, Hawaii: ASME, 2009.

Evans, D.V. "Some theoretical aspects of three dimensional wave energy absorbers." Proceedings of the First Symposium on Wave Energy Utilization. Gothnburg, Sweden: Chalmers University of Technology, 1979. 77-106.

Falnes, J. Ocean Waves and Oscillating Systems. Cambridge, UK: Cambridge University Press, 2002.

Faltinson, O.M. Sea Loads on Ships and Offshore Structures. Cambridge, UK: Cambridge University Press, 1999.

Ivonova I., O. Agren, H. Bernhoff, M. Leijon. "Simulation of wave-energy converter with octogonal linear generator." IEEE Journal of Oceanic Science (2005): 619-629.

Mavrakos, S.A. "Hydrodynamic coefficients in heave of two concentric surface-piercing truncated circular cylinders." Applied Ocean Research (2004): 84-97.

Mueller, M.A. "Electrical generators for direct drive wave energy converters." Proc. IEE Gen. Trans. Distr. (2002): 446-456.

Newman, J.N. Marine Hydrodynamics. Cambridge, MA: The MIT Press, 1977.

NOAA. National Data Buoy Center. 6 June 2008 <http://www.ndbc.noaa.gov/>.

Ocean Power Technologies. Ocean Power Technologies. 6 June 2008 <http://www.oceanpowertechnologies.com/>.

Orcina Ltd. "OrcaFlex Manual." Daltongate, UK: Orcina Ltd.

Patel, M. Dynamics of Offshore Structures. Butterworth and Co. Ltd., 1980.

Pelamis Wave Power. Pelamis Wave Power. 6 June 2008 <http://www.pelamiswave.com>.

Polinder H., M.E.C Damen, F. Gardner. "Linear PM generator for wave energy conversion in the AWS." IEEE Transactions on Energy Conversion (2004): 583-589.

Pontes M.T., R. Aguir, H. Oliveira Pires. "A nearshore wave energy atlas for Portugal." Journal of Offshore Mechanics and Arctic Engineering (2005): 249-255.

Prudell, J.H. "Novel design and implementation of a permanant magnet linear tubular generator for wave energy conversion." Masters Thesis. Corvallis, OR: Oregon State University, 2007.

Rheinfrank K., E.B. Agamloh, A. von Jouanne, A.K. Wallace, J. Pridell, K. Kimble. "A novel ocean energy permanant magnet linear generator buoy." Renewable Energy (2006): 1279-1298.

Salter S.H., D.C. Jeffery, J.R.M. Taylor. "The architecture of nodding duck wave power generators." The Naval Architect (1976).

Schacher, A. "A Novel Control Design for a Wave Energy Converter." Masters Thesis. Corvallis, OR: Oregon State University, 2007.

WaveGen. WaveGen. 6 June 2008 <http://www/wavegen.co.uk>.

# APPENDICES

# APPENDIX 1: Test Plan for SeaBeavI Wave Energy Converter

## 1.0 Introduction

Since 1998, Oregon State University (OSU) has been developing a leading Wave Energy program to educate students who are motivated to responsibly develop renewable energy resources. OSU's multidisciplinary wave energy team has been pursuing wave energy developments in several thrust areas, including researching novel direct-drive wave energy generators, in the Wallace Energy Systems & Renewables Facility (WESRF). This SeaBeavI wave energy buoy conversion system is the fifth generation prototype to be tested at OSU. It is the largest prototype to be tested thus far and the first to be tested in the open ocean.

There are several goals of the ocean testing of the SeaBeavI that will help to further the ongoing research on direct-drive wave energy conversion technologies. A primary goal of the testing is to provide a proof of concept for the use of a permanent magnet linear generator to convert the energy in ocean waves into useable electricity. Data will be collected during the testing to characterize the motions of the device in a seaway and the electricity produced by the linear generator. This data can be used to validate the analytical models of the system dynamics and the linear generator that will be used in design optimization. The SeaBeavI has been designed using an integrative systems level approach enabling valuable information to be extracted from the mooring system implementation, the buoy hydrodynamics, the buoy generator/power take-off system, as well as the power analysis and data acquisition (PADA) module. Another significant goal of the ocean testing is to provide a demonstration of wave energy conversion that emphasizes safety and produces minimal impact on the local environment.

The purpose of this test plan is to provide a working document that includes a list of the test personnel, operating limits for the testing, a schedule for testing, the test procedure, and a description of the end products of the testing.

## 2.0 Test Personnel

The following test personnel will participate in the ocean testing of the SeaBeavI wave energy conversion system:

Ship Captain
Ships Engineer and Crane Operator
Primary SCUBA Diver
Secondary SCUBA Diver
Dive Master
Boat Driver
Fishing Fleet Liaison
Ocean Engineer I
Ocean Engineer II
Electrical Engineer I
Electrical Engineer II
Electrical Engineer III
Environmental Engineer

The primary role of the ship captain will be to coordinate all shipboard activities and pilot the installation vessel during installation and stand by during testing. The ships engineer will also serve as the crane operator during the installation of the test equipment. Two SCUBA divers will be used to install the tensioning system for the mooring and to standby as support divers. A boat driver will be used to pilot a 30' rigid inflatable boat that will hold the power analysis and data acquisition system (PADA) during testing. A member of the local fishing fleet will be aboard as an expert consultant and liaison with the local fleet.

Five engineers from the Wallace Energy Systems & Renewables Facility will be involved in the testing. Ocean engineer I will coordinate the installation of the SeaBeav device and the tensioning and de-tensioning of the mooring system, the ocean engineer will also oversee the collection of the system dynamics and wave data. Ocean engineer II will coordinate the calibration and installation of the wave measurement system used during testing. Electrical Engineer I will be responsible for the control of the generator during testing and oversee the collection of the electrical data. Electrical engineer II will be responsible for the hardware components of the PADA. Electrical engineer III will be responsible for the software components of the PADA. The environmental engineer will oversee the environmental monitoring of the system including the measurement of the magnetic field generated by the system and the acoustics of the device. The engineers will also double as deck crew during the installation of the PADA and the SeaBeavI system.

## 3.0 Test Equipment

The equipment used for the ocean testing of the SeaBeavI wave energy conversion system will include; an installation vessel, two rigid inflatable boats, the power electronics and data acquisition unit (PADA), a motions measurement package, a marine magnetometer unit, a bottom mounted acoustic wave and current sensor, a mooring tensioning system, and the SeaBeavI prototype.

### 3.1 Installation Vessel

The RV Pacific Storm will be used to install the SeaBeavI wave energy conversion system and will serve as the base of operations for the testing of the system. The Pacific Storm is an 82' converted fishing vessel with a large working deck, a 10,000# crane with a 30' boom, and berthing for up to 11 test personnel including the captain and engineer. The vessel is owned by Oregon State University and is primarily used as a cetaceans research vessel.

### 3.2 Rigid Inflatable Boats

Two rigid inflatable boats are routinely used in conjunction with the Pacific Storm during operations to tag and track whales across the Pacific Ocean. The RHIBs are former Coast Guard launches with extended bowsprits. The 30' RHIB will house the PADA and be used to tension the mooring system once the SeaBeavI has been installed at the test site. The 25' RHIB may be used to deploy the divers to install the mooring tensioner prior to the installation of the device.

### 3.3 Power Analysis and Data Acquisition Unit

The Power Analysis and Data Acquisition unit is a portable loading device used to characterize the power output of wave energy devices. Data acquisition includes voltage

and current waveforms, as well as real and reactive power information. This unit can be programmed to accommodate generator power levels up to 30kW and includes an active rectifier front end with a dc-dc converter controlling power dissipation to a bank of load resistors.

### 3.4 Motions Measurement Package

A motions measurement package will be installed in the spar to measure the roll pitch and heave of the spar and the relative linear motion between the spar and the float. The motions measurement package includes a Compact RIO unit to log data, a high precision accelerometer, two angular rate sensors, and a magnetic linear position sensor. The accelerometer and rate sensors can be used to determine the heave pitch and roll of the spar while the magnetic linear position sensor can be used to determine the relative linear motion between the spar and the buoy.

### 3.5 Marine Magnetometer

In order to measure the magnetic field generated by the linear generator a magnetometer capable of being submerged in seawater will be used. The magnetometer can be used to measure the field around the umbilical between the SeaBeavI and the PADA as well as the field around the device itself.

### 3.6 Bottom Mounted Acoustic Wave and Current Sensor

In order to measure the site specific wave climate during testing of the SeaBeavI an acoustic wave and current sensor (AWAK) manufactured by Nortek will be used. The AWAK is a bottom mounted sonar system that utilizes three sonar beams to measure the current velocities and a fourth beam of sonar to measure the sea surface elevation. The AWAK will allow for wave data to be collected in close proximity to the device being tested without influencing the wave height or direction.

### 3.7 Mooring Tensioning System

The mooring tensioning system utilizes a 5:1 block and tackle system that can be used to quickly and efficiently tension the mooring system of the SeaBeavI and allows for a taught mooring system. The mooring tensioning system has been designed to allow for the system to be tensioned and de-tensioned without having divers in the water. This eliminates the potential safety concerns surround having divers operating near a heaving buoy while it is producing power.

### 3.8 SeaBeavI Prototype

The SeaBeavI prototype consists of a taught moored spar buoy housing the armature of a linear generator and a float housing permanent magnets that is free to translate on the stationary spar. The system was designed to generate 1kW RMS power in a 1 m waveheight. A Schematic of the SeaBeavI buoy including dimensions is included in Appendix I.

## 4.0 Test Location

The location for the ocean testing of the SeaBeavI will be located 2 miles West of Agate Beach just North of Newport, Oregon. The site lies in 138 feet of water over sandy bottom. A chart indicating the location of the test site can be seen in Figure 1.

**Figure 1: Location of the OSU Small Scale Test Berth**

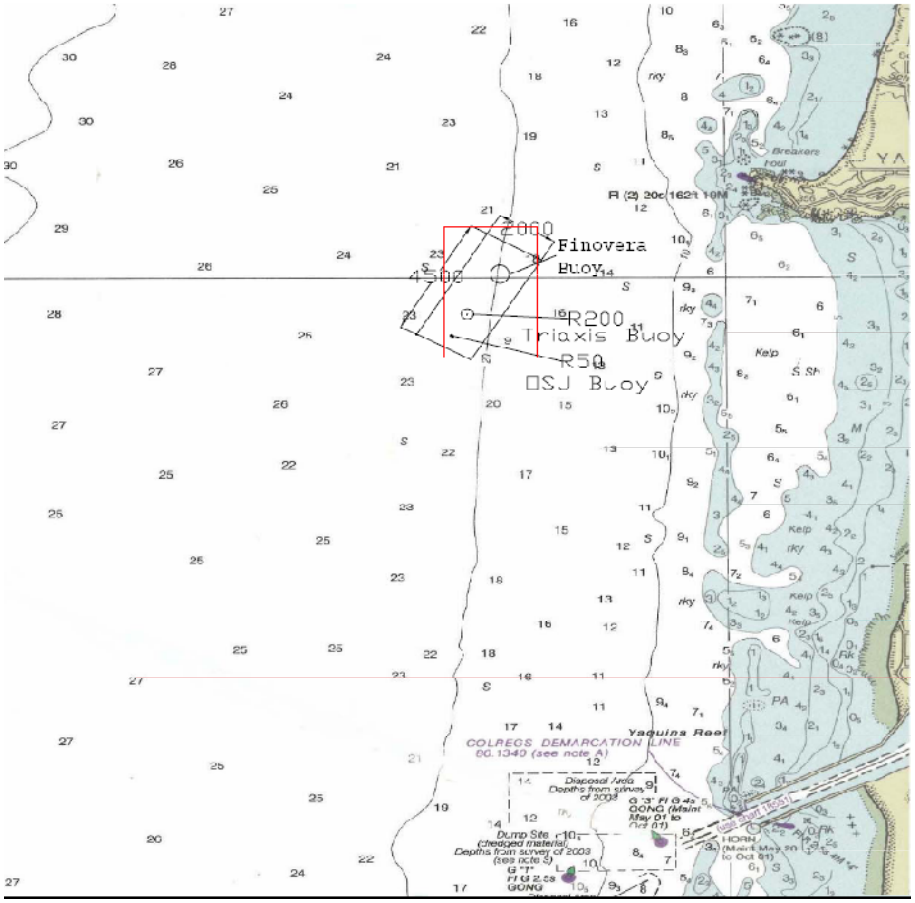


## 5.0 Operating Limits

Based on analysis of the October wave climate off Newport, Oregon, it is recommended that an operating limit of 2.0 m be set for testing of the SeaBeavI in the open ocean. Based on the wind data it is also recommended that an operating limit of 7.7 m/s (15 knots) be established for crane operations.

In order to better schedule the ocean testing, the Navy wave forecasting utility can be utilized. The Navy model can accurately predict the significant waveheight offshore approximately five days in advance. The wind conditions will be more contingent on local weather conditions but should still give us a lead time of no less than 24 hours for scheduling the final date for testing.

The load limit for the generator is governed by the voltage rating of the conductor used in the windings of the armature. This conductor uses insulation with a 600 V rating. As such if the generator loading exceeds 600 V the current will have to be increased in order to avoid failure of the insulation and a direct short in the generator.

## 6.0 Testing Schedule

The testing schedule for the ocean testing of the SeaBeavI is contingent on the weather and tides at the test site location. Based on the weather forecasts a weather window will be identified no more than 24 hours in advance of the testing. The timing of the testing will revolve around the mooring tensioning procedure which requires that the mooring be tensioned at high tide. If the operating limits for the device are exceeded once testing has begun the device will be pulled out of the water and transported back to shore.

### 6.1 Sample Schedule

High Tide – 0300: Transit from Newport to test site
High Tide – 0200: Divers install tensioner system
High Tide – 0130: Deploy 30' RHIB and PADA
High Tide – 0000: Install SeaBeavI and tension mooring
High Tide + 0100: Establish wireless connections and prepare to take data
High Tide + 0200: Begin data collection
High Tide + 1400: End data Collection
High Tide + 1430: De-tension and lift SeaBeav
High Tide + 1500: Lift RHIB and PADA
High Tide + 1530: Transit to Newport from test site
High Tide + 1730: Arrive Newport

Total test duration: 20 hours 30 minutes

## 7.0 Test Procedure

### 7.1 Mooring Tensioner Installation

The tensioning system for the mooring of the SeaBeavI will be installed using two divers from the OSU dive pool. The mooring tensioning procedure will be tested pier side at the Hatfield Marine Science Center prior to ocean testing. Divers will descend 30' to a mid column float attached to an 8000# mushroom anchor on the seafloor. The divers will attach a block and tackle system to the mid column float with a marker buoy at the surface. Once the block and tackle has been installed the divers will come out of the water.

### 7.2 PADA and RHIB Deployment

Before the SeaBeavI can be deployed the PADA will be loaded onto the 30' RHIB and the boat will be lifted off the deck and into the water. The boat will then hold station near the

mooring and wait for the SeaBeavI to be installed. The power umbilical will be connected to the PADA with the free end ready to be attached to the SeaBeavI.

### 7.3 SeaBeavI Installation

Once the tensioning system has been installed the Pacific Storm will move into position near the marker float. The bottom ballast tank of the spar will be filled with fresh water and ready to install. The SeaBeavI will be lifted off the deck using the ship's crane and the free end of the block and tackle and the free end of the power umbilical will be brought onto the deck. The block will then be attached to the eye nut on the bottom of the spar and the power umbilical will be attached to the bulkhead connector. Once these connections have been made the SeaBeavI can be lifted into the water and the crane can be released.

### 7.4 Mooring Tensioning

With the SeaBeavI in the water the 25' RHIB will be used to take out the slack in the mooring system by manually pulling through the block and tackle. Once the slack has been removed the water will be pumped out of the spar ballast tank to achieve the desired pre-tension in the mooring system. Once the mooring is taught the tail from the block and tackle will be transferred to the 30' RHIB for the remainder of the data collection.

### 7.5 Wireless Communications

The buoy data acquisition system and the PADA contain wireless antennas that will be used to transmit data back to the Pacific Storm. The buoy antenna will be mounted through the lid prior to deployment, and the PADA antenna will be mounted during the PADA installation. Two other antennas will be installed on the mast of the Pacific Storm. Once all antennas are in place and systems are operational, wireless connectivity will be verified aboard the Pacific Storm via the research group's notebook computer. In the event of catastrophic wireless failure, once initialized both the buoy and PADA systems will continue to collect data autonomously and may be retrieved manually by the research team.

### 7.6 Data Collection

The buoy data acquisition system has approximately 1 gigabyte of storage located on an external USB thumb drive attached to the CompactRIO. The PADA system has an internal hard drive greater than 100 gigabytes.

The research team plans on collecting approximately 20 minutes of data per hour at 800 samples per second. After 20 minutes, the data will be transmitted back to the Pacific Storm for team review and backup storage before the next cycle begins.

### 7.7 Deployment Decision and Emergency Procedures

The SeaBeav I deployment is planned between Sept. 30th - Oct. 7th, with the actual days depending on weather (no greater than 2m significant wave heights and 15 knot winds). The plan is to conduct two full days of testing, however, if all of the data collection can be achieved during the first day, a second day of testing may not be pursued due to the ever shrinking weather window.

The decision to deploy will be made according to full consensus between Professors von Jouanne and Brekken, Graduate Student leads David Elwood and Joe Prudell, Captain Bob Pedro and Dive Master Jim Washburn. The decision to remove the buoy upon impending unsafe operating conditions will take place based on the directive of *any one* of the above project leaders.

## 8.0 Test Products

### 8.1 CompactRIO Data

Internal buoy data will be collected wireless from a National Instruments CompactRIO 9012 system. The CompactRIO is responsible for acquiring data from an onboard accelerometer/gyroscope/magnetometer solid state device which provides x, y, and z axis acceleration, angular change information, and magnetic readings. The CompactRIO will also acquire data from a linear position sensor that will measure the relative displacement of the generator.

Finally, the CompactRIO will use thermocouples to take temperature measurements throughout the buoy.

### 8.2 PADA Data

The PADA is responsible for collecting generator output data for electrical parameters such as 3-phase voltage, current, period, frequency, phase, real and reactive power via voltage and current transducers.

Data collected by these systems will be fully compatible with both LabView and Matlab datasets for later analysis following project completion.

# APPENDIX 2: Paper for the 2007 Energy Ocean Conference

**Offshore Renewable Energy and Environmental Conflict – Lessons for Wave Energy Development**

David Elwood [a]; Annette von Jouanne [b]; Ted Brekken [b]; Gregg Walker [c]

a Civil Engineering, b Electrical Engineering, c Communications Oregon State University
Corvallis, Oregon. USA

**1.0 Introduction:**

With the threat of peak oil and growing concerns about the effects of global warming it is clear that the World is facing an energy crisis. Most of the energy production today comes from the burning of fossil fuels that not only produce greenhouse gases but are limited in supply. As can be seen in Figure 1.1 the U.S. energy demand has been growing at an increasing rate since the Industrial revolution and shows no signs of slowing down. Today's digital society requires more energy than ever before and, while conservation can reduce our energy needs, alternative forms of energy production will be required in order to reduce our dependence on fossil fuels.

**Figure 1.1: US Energy Production by Type 1850-2000 [3]**

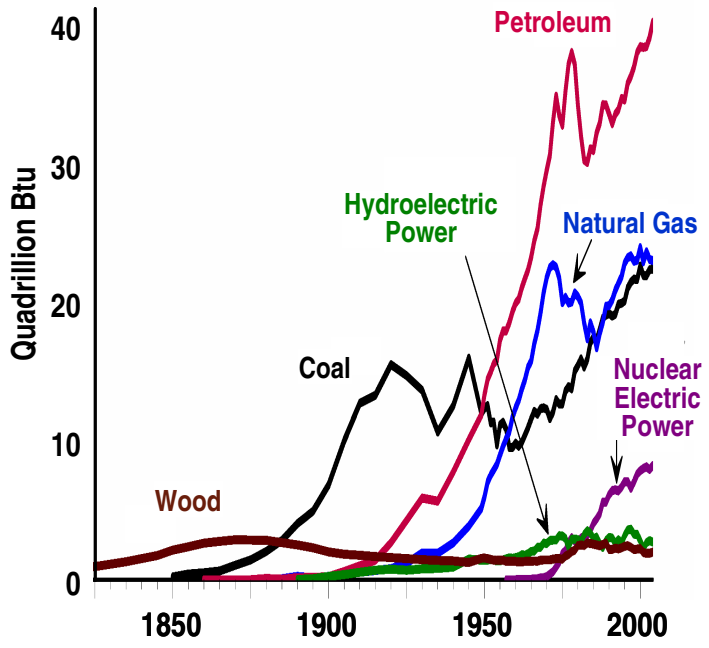


In order to address the problems of diminishing energy resources and pollution caused by energy production efforts are underway to develop renewable energy technologies that can provide a

sustainable source of energy. The cheapest and most widely used renewable energy source today is hydroelectric power. Unfortunately most of the areas available for the development of hydro power have already been exploited and development of remaining areas faces strong opposition due to the impact of new hydro-electric plants on river ecosystems.

During the oil crisis in the 1970s modern wind turbines were developed and today terrestrial wind turbines are becoming cost competitive with some forms of conventional electricity generation. Unfortunately most of the wind resource in the United State is located in the Great Plains far from the population centers, and electricity consumers, on the coasts. While a substantial wind resource exists on the beaches of both coasts high property values have made the production of land based wind power in these areas cost prohibitive. Taking the wind turbines offshore provides developers the opportunity to utilize the coastal wind resource without taking up coveted coastal real estate. Other forms of offshore renewable energy generation including wave and tidal energy also provide an opportunity to generate renewable electricity in close proximity to energy consumers without encroaching on already populated areas.

Offshore wind development began in the early 1990's in Denmark and has since spread across Northern Europe. The process to develop offshore wind in Europe has created a large amount of environmental conflict that was not initially expected by developers. The environmental conflict concerning offshore wind development in Europe can provide insight for potential offshore renewable energy developers in the United States.

The first offshore renewable energy project proposed in the United States is an offshore wind farm to be located in Nantucket Sound termed "Cape Wind." The developers of Cape Wind began planning the development in 2001 and have since been involved in an ongoing battle over the project. The sources of the conflict are numerous and diverse and have lead to a heated debate between Cape Wind and the Alliance to Protect Nantucket Sound, a coalition of Cape Wind opponents. The conflict has been played out primarily in the media with both sides spending millions of dollars to present their "side" of the debate. The conflict surrounding Cape Wind presents a sobering example for other potential offshore renewable energy developers.

Recently there has been extensive interest in wave energy development off the coast of Oregon with seven proposed projects seeking regulatory approval. The development of wave energy has the potential to create the same sorts of environmental conflict that has occurred with renewable energy development in general, and more specifically offshore wind development in Europe and more recently off Cape Cod. For wave energy development to be successful off the Oregon coast it will be important for developers to learn from prior experience with other renewable energy development, both onshore and offshore.

### 1.1 Summary:

This paper will explore the nature of environmental conflict in renewable energy development in order to provide insight into effective means of public involvement for the development of wave energy off the Oregon coast. Section 2 will provide a brief history of conflict generated by renewable energy development including onshore wind, tidal, and geothermal projects. Section 3 will provide insight gleaned from conflict over offshore wind development in Europe and the lessons learned concerning the role of public involvement in the development process. In section 4 the environmental conflict surrounding the Cape Wind project will be discussed in order to determine the sources of conflict involved and the failures in communication. Finally, section 5 will presents some lessons for wave energy development that can be applied to public involvement plans for development off the Oregon coast.

## 2.0 Historic Renewable Energy Development Conflict

Conventional power generation facilities have all the characteristics of contentious development projects. They are large, technically complex, and create the perception of the potential for serious and irreversible impacts on the environment. Initially renewable energy developments seemed to avoid this potential for conflict by providing the opportunity for creating clean energy and gained the support of numerous environmental groups. As these projects have been built, however, they have had unintended environmental impacts that have created the same sort of conflict associated with conventional energy projects. Often local environmental groups oppose such developments due to their large local impacts while global environmental groups support the projects based on the greater good of eliminating pollution from conventional power production.

### 2.1 Sources of Conflict in Historic Renewable Energy Development

The sources of historic conflict between renewable energy developers and the public can be broadly categorized into three issue areas: substantive issues, procedural (process) issues, and relationship issues **[2].** Understanding these sources of conflict is paramount to developing an effective plan for community involvement and participation enabling communication between community members and renewable energy developers.

The substantive issues with renewable energy development vary depending on the type of plant to be built but have some key similarities across various types of renewable energy. These issues are often analogous to issues with other large development projects including conventional energy generation plants. A primary issue is the local environmental impact of the planned development. Renewable energy developments have the potential to dramatically alter the local ecosystem by flooding wetlands, disrupting tidal flows, killing wildlife, and negatively impacting other natural physical processes. Another issue is the scale of the development. Often local groups are willing to support a small scale project that can provide renewable energy for the local community but do not want larger scale installations. Even if the impacts of a single wind turbine are small, for instance, the cumulative effects of a hundred turbines may be unacceptable to a local population. Aesthetic issues are also very important in renewable energy development conflicts. These are not limited to the classic view shed issues where community members are not willing to give up the view of their favorite natural area to a windmill or the scenic wild river to a hydroelectric damn. Aesthetic issues also include ideas about exploitation of the commons and loss of valued “natural” areas. Just because an area is not populated does not mean that it does not have aesthetic significance to a community.

The procedural issues involved in renewable energy conflicts tend to be fairly consistent across the various types of renewable energy. A primary issue is the level of local control of the development. Stakeholders are more likely to support a project that is regulated at the local level then accept regulation from a higher authority. This is consistent with the belief that local governments will be more concerned about local environmental issues while state and federal governments will be more concerned with the overall cost-benefit of the project for society at large. Conflict can also be created due to the speed of development. If the process is pushed forward too quickly the community support may be eroded. A slower process gives the community more time to adjust to a technology that may be unknown to them. For the case of wind power if the turbines are installed one at a time the community has a better chance to gauge the incremental impact of each turbine instead of having an entire wind farm built over a short period of time.

Issues of relationship in renewable energy development conflicts are more difficult to categorize than those of substance and procedure. In general there is not a well developed relationship between the potential renewable energy developer and the community since renewable energy is in general a new technology. Communities do not have experience with the sorts of development being proposed and as such do not have a thorough understanding of the potential issues involved. The developers, on the other hand, have a good technical knowledge of their devices but may not understand the social and environmental impacts their development may produce. In the case of hydro-electric development it is often a state developing a hydro plant that could have serious local environmental impact. In this case there may be issues of power with the state exerting itself on a relatively powerless population. There might also be class and economic issues to be considered since the development may be built in a poor rural area to provide energy for a more affluent urban area.

**2.2 Historic Examples of Renewable Energy Development Conflict**

Numerous examples of historic conflicts involving renewable energy development are presented in **[8]** to better illustrate the sources of such conflict. Three of those historic conflicts involving geothermal, tidal, and wind energy respectively will be presented in this section. Each of these conflicts is routed in one or more of the key issues discussed in section 2.1.

Hawaii has some of the highest energy prices in the United State and as such seems like an ideal location for renewable energy production. In addition the Hawaiian islands have a huge untapped geothermal energy resource. This led the state of Hawaii to form a plan in the early 70s to develop a 500MW geothermal power plant. As the plans for construction moved forward widespread opposition to the project developed concerning issues varying from lowland rainforest destruction to the industrialization of a island with a largely agricultural and tourist based economy. This led to 15 years of heated public protests that nearly caused the project to be scrapped. In this case the collaboration between the state of Hawaii and industry showed little interest for public involvement and as such the project was extremely contentious. As Walker states in **[8]**:

> "Only through a more careful and paced community-directed exploitation of the resource at appropriate scales and with locally derived economic development goals could a less confrontational process been achieved…Once conflict had been created, late attempts by the project proponents to be more open, educate the public about geothermal energy, extend public involvement and embark on a process of mediation (about how, not whether, development would proceed) largely failed due to erosion of trust and confidence that had already occurred"

Here one can see that the developers failed to understand a key substantive issue involving the scale of the project. The community might have accepted a 50MW geothermal plant that could provide power for the local area but were against a 500MW plant. In addition the relationship between the developer and the community was soured by the initial lack of public involvement and as such there was an erosion of trust that generated intense conflict.

In the late 70s tidal energy became attractive to renewable energy to developers since it combined already developed hydro-electric technology with the largely underdeveloped tidal resource. Unfortunately, due to lack of understanding of the key issues, very few tidal energy plants have ever been installed. One such development in Britain at the Severn Barrage created a huge environmental conflict. Once again there was a complaint by community groups at the early stages of development that there was insufficient community involvement in the planning process. Environmental groups were concerned about the impact of the development on the local

environment and the scale of the planned power plant. In the end many of the fears of environmental degradation were contradicted by the environmental impact studies after construction of the barrage. Nevertheless the public trust had been eroded and further environmental conflict was created for subsequent tidal energy projects in Britain. The results of the conflict concerning Severn Barrage and the related conflict for other tidal projects caused the UK government to be more sensitive to the needs for public involvement at the early stages of relationship planning for such projects. Here the primary concern is to create a positive trusting between the community and the developer through a well planned public involvement strategy.

One of the most contentious forms of renewable energy production is wind energy. The substantive issues with wind power plants range from view shed issues to issues of noise pollution and bird mortality. While a majority of the public, when polled, approves of the concept of wind power few support wind development in their communities. Especially in the United States local opposition to wind farm development has been one of the biggest challenges for the emerging wind power industry. This conflict has been exacerbated by wind farm developers who plan the locations for wind development based solely on the availability of the wind resource and without considering the high value of the landscape that they wish to develop. In addition most wind farms have been developed rapidly giving community members little time to adjust or take stock of the impact of such development. This conflict has also been fueled by the nature of the public debate which has occurred mostly in the media. This has led to dissemination of misleading information and a general sensitization of the conflict.

**3.0 Offshore Wind Conflict in Europe**

Commercial development of offshore renewable energy in Europe has been ongoing for the past 15 years. To gain insight into the potential for conflict and strategies for public involvement in developing offshore renewable energy resources in the United States it is therefore prudent to draw from the experience of European developers. Many of these lessons about effective public involvement strategies were outlined by the Copenhagen Environment and Energy Office [7].

**3.1 Role of Public Involvement in Offshore Wind Development**

Since Denmark is the world leader in offshore wind energy development it is safe to assume that the Dutch would have many valuable suggestions about effective means of public involvement. In their paper the researchers from Copenhagen defined three primary means of public participation that can be used in offshore wind development:

1. Informative – Disseminating information about the development to the community
2. Planning Participation – Including the community in the planning and decision making process
3. Financial Participation – Giving the community the opportunity to become involved in the project financially.

The most common approach to public involvement is the informative approach that can be compared to the tech-reg communication style commonly used by the Federal government in the United States. While this type of communication is useful it is not nearly as important as planning and financial participation of the community in the development process. By including the community in the planning of the project and giving them a financial stake in the outcome of the development it increases the sense of control for community members and reduces the potential for conflict.

Danish researchers also note several other perceived advantages of public participation in the planning process for offshore wind projects. Obviously early public participation will allow for collaborative learning between all the stakeholders which can give the developer an increased awareness of the public concerns. This increased awareness of the important issues can help to bring balance to the decision making process that otherwise could be weighted more heavily toward the technical issues involved in site selection and configuration of the development. Bringing the community into the process at an early stage also leads to an increased understanding of the collaborative potential in the planning process. If it is clear to the community what aspects of the project they can directly impact (the decision space) they will be more compelled to participate in the project and gain a sense of ownership.

### 3.2 Collaborative Potential in Offshore Wind Development

The Danish report uses a case study from a wind development project near Copenhagen to illustrate the potential for collaboration between developers and the community when developing offshore wind power plants. One of the key aspects of successful wind development in Europe is the cooperative ownership model used to fund many offshore wind projects in Denmark. This collaborative ownership scheme gives half the ownership of the wind power plant to the developer while allowing members of the local community to buy into the project as well, owning the other half of the development. By giving community members a direct economic stake in the development they are much more likely to be supportive of the project. Economic involvement by the community also changes the relationship between the developer and the local stakeholders by giving them even status in the decision making process. Instead of having the developer hold all the power in the process the community now has leverage, through their ownership, to influence decisions involving site selection and layout of the development.

In the case of one development at Middelgrunden, just outside the Copenhagen Harbor, the cooperative model allowed for the construction of a 40MW development less than three miles from a major metropolitan area. The involvement of the local cooperative early in the planning stages of the project led to compromises in both the size and configuration of the wind farm. Originally the developer planned to install twenty-seven 2MW turbines arranged in three rows of nine turbines each. In response to the communities concerns about the proposed layout the developer reduced the number of turbines and arranged them in a single curved line instead of rows of turbines. This addressed a central concern of the local community concerning view shed issues while still maintaining a large number of turbines. In this case the developer made it clear that the layout of the development was negotiable enabling the community to voice concerns about the original configuration and led to a decision that was acceptable to both parties. The finals results, as can be seen in Figure 3.1 created what many see as an enhancement of the view for Copenhagen harbor.

Another potentially contentious issue between the developers at Middelgrunden and the community involved noise pollution from the wind turbines. When these concerns were raised the developer organized a demonstration tour at a nearby terrestrial wind farm.

**Figure 3.1 View of Middelgrunden Offshore Wind Development from the Air [5]**

Once the local people had a chance to experience the noise created by a working turbine they were better able to judge the impact of the proposed wind power plant in terms of noise pollution. Instead of perpetuating a concern about noise based largely on conjecture the developer gave the community the first hand knowledge they needed to make an informed decision about the impact, aiding collaboration.

Overall the collaborative process used at Middelgrunden has enabled the development of an offshore renewable energy plant that has generated relatively little environmental conflict. This lack of conflict is in no small part due to the inclusion of the public in the early stages of the planning process for the development. The cooperative ownership model used to develop Middelgrunden created a relationship between the developer and the community that enabled collaboration between all the stakeholders. By making the decision space clear from the beginning the developers at Middelgrunden were able to address the key issues raised by the community without jeopardizing the viability of the project.

## 4.0 Environmental Conflict in the Cape Wind Project

About the same time the Middelgrunden wind farm was coming online in 2001 a developer calling itself Cape Wind was beginning plans to construct an offshore wind farm in Nantucket Sound. The company began the permitting process with the Federal Energy Regulatory Commission and the US Army Corp of Engineers to build the wind farm in the small patch of federal waters located in an area called Horseshoe Shoals. The decision regarding the location of the wind farm, according to Cape Wind, was based primarily on the consistent winds in Nantucket Sound and the relatively

shallow water over the shoals. In addition the islands of Nantucket and Martha's Vineyard protected the location from large storms and violent seas that exist in the open Atlantic. Figure 4.1 shows the location of the proposed development. The planned development covers twenty-four square miles and will consist of one hundred and thirty 440 foot tall wind turbines.

**Figure 4.1 Proposed Location of CapeWind Offshore Wind Farm [6]**

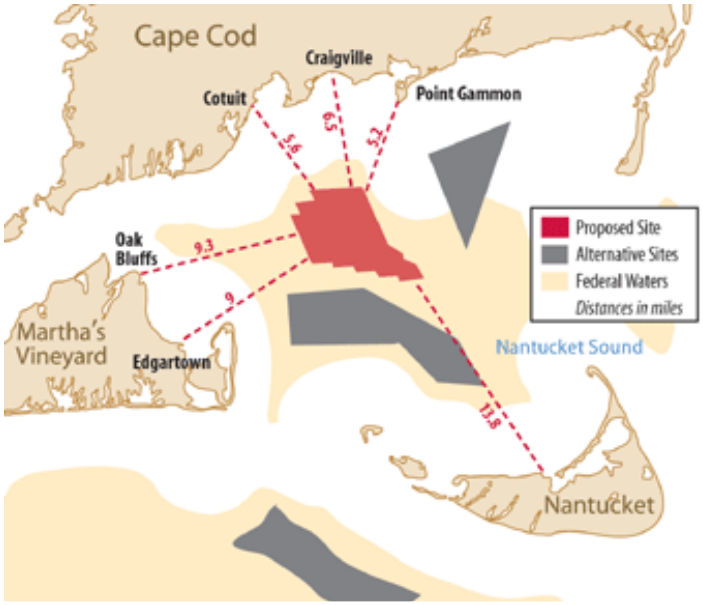


Since the beginning of the permitting process the developers of Cape Wind have been in a constant struggle with a coalition of community groups calling themselves the Alliance to Protect Nantucket Sound. The conflict has been played out largely in the media and has been politicized by both sides of the issue. This has led to an escalating level of conflict with a seeming lack of collaboration between the project supporters and the coalition opposing the development. The sources of conflict in this case are numerous and diverse but have striking similarities to historic conflict concerning renewable energy development. A lack of meaningful and constructive public involvement in the planning process for the project, however, has led to a high level of conflict that at times has threatened the development of what may become the first offshore renewable energy project in the United States.

### 4.1 Sources of Conflict

Once again the progress triangle used by Daniels and Walker can be used to analyze the sources of conflict for Cape Wind. While the substantive issues are important the process in this case has also been a substantial source of conflict. Due to failures of process at early stages of development the relationship between the developer and their opponents the progress on the project has been adversely affected. By understanding the effects of all the issues in this case valuable lessons can be learned for future offshore renewable energy development.

#### 4.1.1 Substantive Issues

Determining the substantive issues in an environmental conflict situation can be very difficult in the absence of good public opinion data. Conjecture about what will and won't be important to people can be inaccurate and misleading. In the case of Cape wind a thorough review of the public opinion on the issue was conducted through a series of public opinion polls and informal interviews conducted by researchers at the University of Delaware **[9]**.

Of the many substantive issues discussed the most important issues to the local community seemed to revolve around aesthetic concerns. One of the biggest issues is the concern of view shed disruption due to the large wind towers visible on the horizon from much of Cape Cod and the islands of Nantucket and Martha's Vineyard. This issue is not only aesthetic but also economic since property values (see Figure 4.2) and tourism revenues are directly tied to the aesthetic value of Cape Cod. As such people are not just concerned about the disruption of the view from their favorite beach but more pragmatically are worried that the development of a wind farm in Nantucket Sound will drive away tourists and depress property values. Since the area around Cape Cod has some of the highest property values in the nation the monetary value of these aesthetics is not inconsequential.

Another, perhaps more important, aesthetic issue concerning the development involves the feelings of the community about the ocean and its value as a commons. In their informal surveys the Delaware researchers found that many people talked about the sacred nature of the ocean and the audacity of developers who would want to invade its space by building permanent structures there. They drew a distinction between other users of the ocean, like fisherman, who use the areas they fish on a transient basis.

**Figure 4.2 Property Value on Cape Cod [10]**


Many felt that by building permanent structures the wind developers would be taking ownership of the Sound, an area that should remain in common ownership for common use. As one survey respondent said:

> "I don't think anybody should be allowed to do anything with the ocean because I feel that nobody can actually buy a piece of the ocean or own the ocean…It should be left the way it is…There has to be something left for everybody, whether you have money or not, to be able to enjoy." **[9]**.

This almost spiritual value for the ocean as an untouched wilderness area was also expressed by Robert Kennedy Jr. in an OpEd piece he wrote about the development for the New York Times:

> "As an environmentalist, I support wind power, including wind power on the high seas…But I do believe that some places should be off limits to any sort of industrial development. I wouldn't build a wind farm in the Yosemite National Park. Nor would I build one on Nantucket Sound…" **[4]**

As a property owner on Cape Cod who stands to be directly effected by the project Mr. Kennedy has a clear interest in preserving the aesthetic value of Nantucket Sound. Still, his notion of the value of the sound as a wilderness area is important to note and should be a consideration in the siteing of offshore renewable developments.

A more tangible issue of concern for members of the community are the effects of the Wind Farm on the environment. Just as with the historic examples of renewable energy conflict there is a disconnect between local environmental groups concerned with the immediate effects on the ecosystem of Nantucket Sound and global environmental groups concerned with the implications for reductions in air pollution and greenhouse gas emissions. The tangible effects of the wind farm on the environment include bird mortality due to the spinning turbine blades and noise pollution effecting marine mammals during installation. Unlike the more intangible aesthetic issues, however, these effects can be measured and the concerns of the public addressed through an environmental impact statement.

### 4.1.2 Procedural Issues

No less important than the substantive issues there are also many procedural issues that have lead to conflict with the Cape Wind development. The results of the Delaware survey indicate that many local residents feel that there is not enough local control of the project and that the State and Federal regulators are looking to force the project on to Cape Cod regardless of public opinion. This failure at the procedural level is in part due to the lack of prior regulatory experience with offshore renewable energy development in the US and the fact that this project is "the first of its kind" (even though offshore wind development has been ongoing in Europe for over a decade).

When the process of permitting Cape Wind first began there was a lack of regulatory policy in the United States concerning offshore renewable energy developments. As such the project fell under the regulatory control of the Army Corp of Engineers who traditionally have had very little involvement with offshore projects. While the Army Corp of Engineers has extensive experience with the regulation of coastal engineering projects offshore structures have traditionally fallen under the control of the Coast Guard and the Minerals Management Service (MMS, a division of the federal government that regulates to offshore oil industry). Since the Corp was inexperienced there was a perception in the community that some of the contentious substantive issues would be overlooked. Since the beginning of the debate the MMS has drafted a set of guidelines for regulating offshore renewable energy development that addresses many of these concerns.

A more important issue of process was the question of jurisdiction in Nantucket Sound. Typically coastal States have regulatory control over any project to be installed within 3 miles of shore.

Beyond three miles the federal government has regulatory responsibilities out to the limit of the territorial sea. Since Horseshoe Shoal is more than 3 miles from the nearest land it is considered to be in federal waters even though it is entirely surrounded by the state of Massachusetts. This led many people in the Cape Cod community to feel that Cape Wind was exploiting a regulatory loophole in order to avoid state and local control. By filing permits before consulting with the community the perception that Cape Wind was "trying to get away with something" was created. A lack of local control has therefore become a key issue in the conflict concerning Cape Wind. Rightly or wrongly those opposed to the project feel that the developers of Cape Wind used the fact that Horseshoe Shoal is located in federal waters to avoid oversight at the state and local level.

### 4.1.3 Relationship Issues

Almost from the beginning an adversarial relationship has existed between the Cape Wind developers and the various opposition groups. The opposition has formed the Alliance to Protect Nantucket Sound, which has conducted an active public relations campaign to resist the development. The Alliance has run numerous TV commercials and lobbied heavily within both the state government of Massachusetts and at the federal level. In response Cape Wind has hired its own political lobbyists and created a comprehensive website with links to media support for the project. In this way much of the debate has been shifted from local community meetings to media and political forums. As such the relationship between the supporters of the project and the opposition has been less about collaboration than confrontation.

The cause of this relationship between stakeholders in the conflict is due in part to some of the procedural issues involved. Initially Cape Wind was perceived as trying to avoid local involvement and oversight in the project by dealing directly with federal regulators. Members of the community therefore though that their best course of action was to fight the development at the federal level. Very quickly the debate was transferred from the level of collaborative involvement to political and legal action. Those opposed to the project felt that they would be powerless to effect the planning of the project since the area fell under federal jurisdiction. This limited their incentives to collaborate and conflict was the result.

Likewise when the Alliance moved the debate to the political arena Cape Wind felt that they were using their high powered political connections, including members of the Kennedy family, to unfairly "kill" the project. This led the developers to respond with their own widespread political and public relations campaigns. Before long most of the stakeholders were entrenched in their opinions either in support of or opposing the project. The feeling that everyone was "taking sides" limited the opportunities for collaboration as the planning process proceeded. In an atmosphere of strong opinions and alliances there was little room for compromise.

## 5.0 Lessons for Oregon Wave Energy Development

Over the past year there has been a surge in interest in developing wave energy power plants off the coast of Oregon. While the technology is not nearly as mature as offshore wind power wave energy has the potential to become a meaningful part of the renewable energy portfolio in the Pacific Northwest. Developers are drawn to the Oregon coast by the large wave resources available, the availability of electrical infrastructure along the coast, and the positive political climate for renewable energy development. Over the last year there has been a sort of wave energy "goldrush" along the Oregon coast with seven different companies filing preliminary permits with the Federal Energy Regulatory Committee. In addition three counties have filed their own FERC permits in order to try to maintain control over their coastline. Wave energy developers should be aware of the

lessons to be learned from previous environmental conflicts concerning renewable energy in order to avoid costly battles of the sort that Cape Wind is now engaged in.

## 5.1 Potential Issues for Oregon Wave Energy Development

### 5.1.1 Substantive Issues

As with other renewable energy development the most important substantive issues for wave energy will be concerned with the local environmental impact. Since wave energy is a relatively new technology, however, there is very little concrete scientific evidence of its impact on the environment. There has been a large amount of conjecture about the influence of electrical fields on wildlife and the effects of decreased wave heights on sediment transport but until a large scale test has been conducted it will be difficult to quantify the level of impact. The issue of scale is also important in wave energy just as it has been for other renewable projects. Communities will be much more likely to support a small scale development that can provide energy for the local community than a large scale development that will look to export energy.

Aesthetics may be the key issue for wave energy just as it has become the most contentious issue for offshore wind energy development. While the view shed issues related to wave energy are in general much less than wind energy due to small size of most devices strong feelings about certain areas on the Oregon coast may prevent development. The idea of the ocean as a wilderness that must be preserved may be even more prevalent along the Oregon coast since large stretches of the coast are generally owned by the state and are therefore undeveloped. The larger notion of the ocean as a commons may also prove to be a point of conflict if large areas of the ocean are to be permanently occupied by wave energy developments.

Another substantive issue that was not specifically discussed in relation to offshore wind development is the issue of conflict with already existing economic activities offshore. Off the Oregon coast there are extensive fisheries resources that will be limited by wave energy development. The historic fisheries not only have monetary value to the fisherman but also have social significance for a society that has been largely based on fishing. Many have argued that the development of wave energy will provide economic benefits for coastal communities that will offset the lost fishing but have not considered the cultural significance of fishing to coastal Oregon. Historically the fisherman have had nearly free reign to fish off the coast of Oregon, any restrictions of their historic fishing grounds in areas of wave energy development must be carefully considered by developers.

### 5.1.2 Procedural Issues

Much like the Cape Wind project the first wave energy developments off the Oregon coast will find themselves in the position to be setting precedent and dealing with regulations that are difficult to apply to new technologies. With the current rush to “stake claims” through regulatory filings this may lead to the perception that companies are trying to more forward with development before the proper regulatory process is in place. Without clear guidelines for community involvement there is a risk that community members will feel that they will not have any say in the planning process for such projects. This could lead to a conflict similar to the one seen on Cape Cod concerning Cape Wind.

### 5.1.3 Relationship Issues

Most of the potential relationship issues for wave energy development conflict are analogues to those for other renewable energy conflicts. Often community members may feel that they are in a low power position when negotiating with developers who have the perceived backing of state and federal government and regulators. In the case of Oregon there is also the relationship between the energy producing state in the Northwest and the energy consuming state of California. If the stakeholders feel that wave energy will be used to provide for the growing electrical demand from California they may be less willing to support large scale wave energy development. The relationship between the state and fisherman along the Oregon coast is also a potential issue. Currently fisheries management scientists are working on plans to create marine preserves off the Oregon coast where fishing will be prohibited. This may create an adversarial relationship between the fisherman and Oregon state government that is seen as a "promoter" of wave energy.

**5.2 Collaborative Potential**

The public involvement practices used by offshore wind developers in Europe offer a good foundation for the promotion of collaboration in Wave Energy development off the coast of Oregon. In order to promote collaboration between community members and developers the decision space must be made clear from the beginning concerning the development, efforts should be made to allow for local ownership of the project, and the process must be made transparent to the public.

In order to engage the community in a meaningful collaboration concerning wave energy development the decision space of the project must be made clear from the beginning. Based on the issues important in other renewable energy conflict it would seem that the size and speed of development should be left open to negotiation. Starting small and moving slowly may allow for the community to become better accustomed to new technology and avoid conflict. The siteing of wave energy developments should also be a collaborative process including community input. Currently the site selection for wave energy is based primarily on engineering concerns. If the areas that are important to the current stakeholders are considered in the siteing process potential conflict may again be avoided.

Based on the experience of European offshore wind developers giving local stakeholders the opportunity to have ownership in the development is also key to a successful collaboration with the community. This sort of COOP system gives community members greater incentive to want the project to succeed and gives them greater involvement in the planning process. Since local control is a key issue in many conflict involving renewable energy giving the community power to control the nature of the development and the benefits of its success can be extremely powerful. This sort of shared ownership also creates a relationship between the developer and the community where power is shared instead of having the developer in a higher powered position with respect to the community members.

Finally, and perhaps most importantly, the process of community involvement and collaborative decision making must be made clear from the beginning. If it is the developers' goal to create a collaborative relationship then they must take care to honor the agreements made with the community. If the process for decision making changes and the community is no longer involved it can lead to an erosion of trust that could promote conflict. In addition the method for incorporating public comments in the decision making process must be transparent. If the community feels that its comments are not being used for a constructive purpose they will be much less likely to engage in a collaborative process. Simply holding public meeting is not enough; developers must be

willing to respond to the concerns generated by such public meetings in a meaningful and productive way.

### 5.2.1 Collaboration between FINE and OSU

An example of a successful public participation program is the collaboration between Fisherman Interested in Natural Energy (FINE), a Newport, Oregon based organization representing the interests of the local fishing fleet concerning wave energy development, and Oregon State University. Around the time commercial wave developers began filing for permits to install wave energy plants off the Oregon coast FINE was created in order to advise the Lincoln county board of commissioners on issues concerning wave energy development and its impact on commercial fishing. When researchers at Oregon State University proposed testing of a small scale wave energy conversion system off the coast of Newport representatives of Oregon Sea Grant facilitated a series of meetings between FINE and OSU in order to determine the best location for the research test site.

Over the next year researchers from OSU met with FINE on a monthly basis to discuss the fisherman's issues with wave energy development and determine a testing plan that would have the lowest possible impact on the fisherman. Through collaborative learning the researchers were able to communicate their issues concerning site selection with the fisherman who in turn offered their concerns along with valuable local knowledge about the environment off the coast of Newport. This allowed the fisherman and the researchers to negotiate a testing location that limited the loss of prized fishing grounds while enabling the testing of the proposed wave energy conversion device. The key to successes of the process was that the decision space concerning site selection was large allowing for negotiation. The collaboration also indicated design considerations that could limit the conflict between fisherman and wave energy systems.

While the collaboration between FINE and OSU to determine the best location for a wave energy conversion test site was a success, further work is still required to design an appropriate public participation process for commercial wave development. Care should be taken to ensure that all the potential stakeholders are including in any public process as early as possible in the planning stages. While FINE represents the commercial and recreational fishing fleets as well as the local whale watching tour boats there are many other stakeholders that were left out of the process. These stakeholders might include local environmental groups, biologists, physical oceanographers, surfers, coastal property owners, and many other groups that could potentially have issues with wave energy development. As with the FINE/OSU process the most important aspects of the public participation process will be a clearly defined meaningful decision space. The location, size, and configuration of the development should be, at least to some degree, open to negotiation. If the community feels that there are aspects of the development that are negotiable then they will be more willing to participate in a collaborative process.

**References:**

**1. Cape Wind, http://www.capewind.org/**

**2. Daniels, Steven E. and Walker, Gregg B. *Assessing the Promise and Potential for Collaboration: The Progress Triangle Framework,* Proceedings of the 7th Biennial Conference on Communication and the Environment, 2005, Pages 188-201**

**3. Dehmer, Patricia M. *Some Energy Facts …Facing our energy challenges in a new era of science,***
**Energy, http://www.sc.doe.gov/bes/presentations/ , 18 April 2006**

**4. Kennedy, Robert F. Jr. *An Ill Wind off Cape Cod*, The New York Times, 16 December 2005**

**5. Middelgruden Wind Turbine Co-operative,**
**http://www.middelgrunden.dk/MG_UK/ukindex.htm**

**6. Save Our Sound: Alliance to Protect Nantucket Sound,**

**http://www.saveoursound.org/**

**7. Soerenson, Hans Christian. *Experience with and Strategies for Public Involvement in Offshore Wind Projects*, National Planning Procedures for Offshore Wind Energy in the EU, Institute for Infrastructure Environment and Innovation, Brussels, Belgium, 5 June 2003**

**8. Walker, Gordon. *Renewable Energy and the Public,* Land Use Policy, 1995, Volume 12, Number 1, Pages 49-59**

**9. Willett Kempton, Jeremy Firestone, Jonathan Lilley, Tracy Rouleau and Phillip Whitaker *The Offshore Wind Power Debate: Views from Cape Cod*, Coastal Management, 33:2, 119 – 149, 2005**

**10. Zillow.com: Your Edge in Real Estate, www.zillow.com**

# APPENDIX 3: Paper for the 2008 Energy Ocean Conference

## Using In Situ Data to Estimate the Wave Energy Potential for the United States

David Elwood [a]; Solomon Yim [a] ; Annette von Jouanne [b]; Ted Brekken [b]

a Civil Engineering, b Electrical Engineering, Oregon State University Corvallis, Oregon. USA

**1.0 Abstract**

By using measured data collected by buoys deployed along the coast of the United States by the National Data Buoy Center (NDBC) the average annual wave power at discrete points along the coastline can be calculated. Traditionally the raw wave power potential has been calculated using a peak period technique. A more accurate spectral method for predicting the wave power potential using In situ measurements has been investigated similar to the method used to produce the Portuguese ONDATLAS (Pontes). Speaking only about the annual average power potential can be erroneous since there are large seasonal fluctuations in the available wave power. Probability distributions of the measured wave power allow for this variability to be better investigated.

**2.0 Methodology**

The National Oceanic and Atmospheric Administration maintains a network of wave measurement buoys along the coast of the United States through NDBC. Real time data from these buoys is made available via the NDBC website (NOAA). In addition, historical data on the significant wave height and peak period along with the wave spectrum are logged every twenty minutes. This historical data has been used to conduct an investigation of the wave power potential along the coast of the United States.

**2.1 Peak Period Method**

The energy of a progressive water wave can be defined using linear wave theory and is proportional to the wave height squared. The wave energy is the sum of the potential energy of the water particle relative to the still water line and the kinetic energy due to the water particle velocity. The linear wave energy per wave per unit width is proportional to the wave height squared and can be expressed as:

$$E = \frac{1}{8}\rho g H^2 \tag{1}$$

where:

E = Linear Wave Energy
$\rho$ = Water Density
g = Gravitational Constant

The energy in a linear wave is transmitted at the group velocity of the wave. The group velocity in deep water is half the wave celerity and can be defined as:

$$C_g = \frac{C}{2} \tag{2}$$

where:
$C_g$ = Group Velocity
C = Wave Celerity
In deep water the wave celerity simplifies to:

$$C = \frac{g}{\omega} \tag{3}$$

where:
g = Gravitational Constant
$\omega$ = The Wave Frequency
Finally the wave energy flux, or wave power, can be determined by taking the product of the wave energy and the group velocity:

$$E_{flux} = \frac{g}{2\omega}\frac{1}{8}\rho g H^2 \tag{4}$$

In order to calculate the average wave energy flux based on the significant wave height and peak period the following equation can be used [#]:

$$E_{Flux} = \frac{1}{8}\rho g {H_{RMS}}^2 C_g \tag{5}$$

$$C_g = \frac{gT_P}{4\pi} \tag{6}$$

where:
$T_P$ = Peak Period

The RMS wave height can be determined from the significant wave height by the relation:

$$H_{RMS} = \frac{H_{1/3}}{\sqrt{2}} \tag{7}$$

where:
$H_{1/3}$= Significant Wave Height

The NDBC reports the average historical significant wave height and peak period for a ten year period from 1991-2001. This data was used to calculate the average wave power for each of the 21 stations analyzed.

Since the data for the peak period method is readily available and the calculation method very simple the wave power potential can be calculated quickly and with a small amount of data.

## 2.2 Spectral Method

A real seaway contains waves of many frequencies, not just a single monochromatic wave train. These stochastic seas can be represented by a wave energy spectrum. As can be seen in Figure 1, the wave energy spectrum, $S(\omega)$, is the probability distribution of energy density over a range of frequencies.

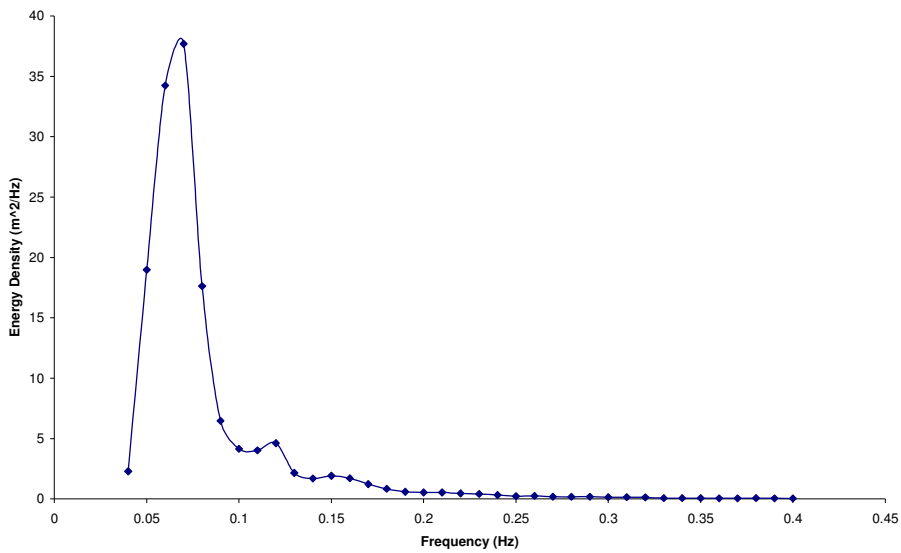


**Figure 1: Wave energy spectrum 1/1/2004 NDBC Station 46050 - STONEWALL BANKS - 20NM West of Newport, OR**

In order to determine the total wave energy of the entire spectrum the energy density is integrated over the range of frequencies:

$$E = \int S(\omega) d\omega \tag{8}$$

The wave energy flux can again be defined as the product of the wave energy and the deep water group velocity. These leads to the following equation for wave energy flux, analogous to equation #:

$$E_{Flux} = \int \frac{1}{2}\frac{g}{\omega} \rho g S(\omega) d\omega \tag{9}$$

The NDBC records the wave spectrum every twenty minutes using 50 discrete frequency bins range from 0 to .5 Hz. These spectra are posted on the NDBC website and can be numerically integrated to determine the average wave energy flux for each 20 minute period:

$$E_{Flux} = \sum_{1}^{N} \frac{1}{2} \frac{g}{\omega_i} \rho g S(\omega_i) \Delta\omega \quad (10)$$

For the spectra used from the NDBC N is 50 and $\Delta\omega$ is .01 Hz. Once the wave energy flux has been determined for each 20 minute period the results can be averaged over the entire year to find the average wave energy flux. Five years of data wave used to generate a long terms average for each NDBC station.

This spectral method requires integration and the use of a substantially larger data set. It is much more computationally intensive than the peak period method. Since the method takes into account the distribution of the wave energy over a range of frequencies instead of assuming the energy to be transmitted at a single peak frequency it should yield more accurate results.

### 2.3 Wave Power Statistics

The average wave power is only a single statistic that can describe the overall distribution of different power levels at a given location. A probability density function of the wave power levels can be generated from the wave energy fluxes calculated using the spectral method in order to analyze the distribution of these events.

The wave power data was sorted into 1 kW/m bins and the probability of each power level determined based on the five years of data for each station. Power levels greater than 189 kW/m were excluded from the probability density function. The higher power levels corresponding to significant wave heights of 7 meters and greater were deemed too large to make wave energy extraction feasible.

PDFs of wave power have been generated for the 10 west coast stations and the most probable and median power levels determined. The total wave energy production can then be assessed and comparisons made between stations and with the calculated statistics.

## 3.0 Results

### 3.1 US Wave Energy Potential

The average annual wave power levels calculated using the peak period and spectral methods are included in Table 1. The wave power levels calculated using the peak period method range from 3 kW/m off the coast of Florida to 35 kW/m in the Bay of Alaska. The power levels calculated using the spectral method range from 3 kW/m to 30 kW/m with the spectral averages generally between 15 and 30 percent lower than those calculated using the peak period method.

**Table 1 Wave Power Statistics for the Coast of the United States**

| Location Name | Wave Power | | | | |
|---|---|---|---|---|---|
| | Spectral Average | Peak Period Average | % Difference | Most Probable (Spectral) | Median (Spectral) |
| non-dim | kW/m | kW/m | non-dim | kW/m | kW/m |
| Station 46001 - GULF OF AK 88NM South of Kodiak, AK | 30 | 35 | 14.29% | 4 | 16 |
| Station 46022 - EEL RIVER - 17NM West-Southwest of Eureka, CA | 24 | 31 | 22.58% | 4 | 16 |
| Station 46014 - PT ARENA - 19NM North of Point Arena, CA | 25 | 32 | 21.88% | 5 | 15 |
| Station 46028 - CAPE SAN MARTIN - 55NM West Northwest of Morro Bay, CA | 21 | 30 | 30.00% | 8 | 14 |
| Station 46027 - ST GEORGES - 8NM West Northwest of Crescent City, CA | 20 | 28 | 28.57% | 5 | 14 |
| Station 46047 - TANNER BANKS - 121NM West of San Diego, CA | 19 | 32 | 40.63% | 8 | 14 |
| Station 51001 - NW HAWAII 170 NM West Northwest of Kauai Island | 19 | 30 | 36.67% | 8 | 13 |
| Station 46029 - COL RIVER BAR - 78NM South Southwest of Aberdeen, WA | 24 | 28 | 14.29% | 4 | 12 |
| Station 46050 - STONEWALL BANKS - 20NM West of Newport, OR | 24 | 31 | 22.58% | 2 | 11 |
| Station 46041 - CAPE ELIZABETH- 45NM Northwest of Aberdeen, WA | 18 | 23 | 21.74% | 3 | 11 |
| Station 46012 - HALF MOON BAY - 24NM South Southwest of San Francisco, CA | 17 | 22 | 22.73% | 4 | 11 |
| Station 44008 - NANTUCKET 54NM Southeast of Nantucket | 11 | 8 | -37.50% | 2 | 5 |
| Station 44014 - VIRGINIA BEACH 64 NM East of Virginia Beach, VA | 6 | 8 | 25.00% | 2 | 3 |
| Station 41009 - CANAVERAL 20 NM East of Cape Canaveral, FL | 4 | 6 | 33.33% | 1 | 2 |
| Station 41008 - GRAYS REEF - 40 NM Southeast of Savannah, GA | 2 | 4 | 50.00% | 1 | 1 |
| Station 44005 - GULF OF MAINE 78 NM EAST OF PORTSMOUTH,NH | 6 | 9 | 33.33% | | |
| Station 41004 - EDISTO - 41 NM Southeast of Charleston, SC | 5 | 6 | 16.67% | | |
| Station 44009 - DELAWARE BAY 26 NM Southeast of Cape May, NJ | 5 | 5 | 0.00% | | |
| Station 42019 - Freeport, TX 60 NM South of Freeport, TX | 4 | 5 | 20.00% | | |
| Station 44025 - LONG ISLAND 33 NM South of Islip, NY | 4 | 5 | 20.00% | | |
| Station 42039 - PENSACOLA - 115NM East Southeast of Pensacola, FL | 3 | 3 | 0.00% | | |

Figures 2a and 2b illustrate the distribution of wave power along the US coast using the peak period and spectral data respectively. Both methods show a clear trend of higher power on the west coast of the United States than the east and gulf coasts. The trend of higher wave power levels in the North and lower in the South generally seen on maps of global wave power distribution is not evident on the west coast of the United States. While the highest wave power corresponds to the farthest North station power levels between Washington and Southern California do not show a trend toward higher power levels in the North.

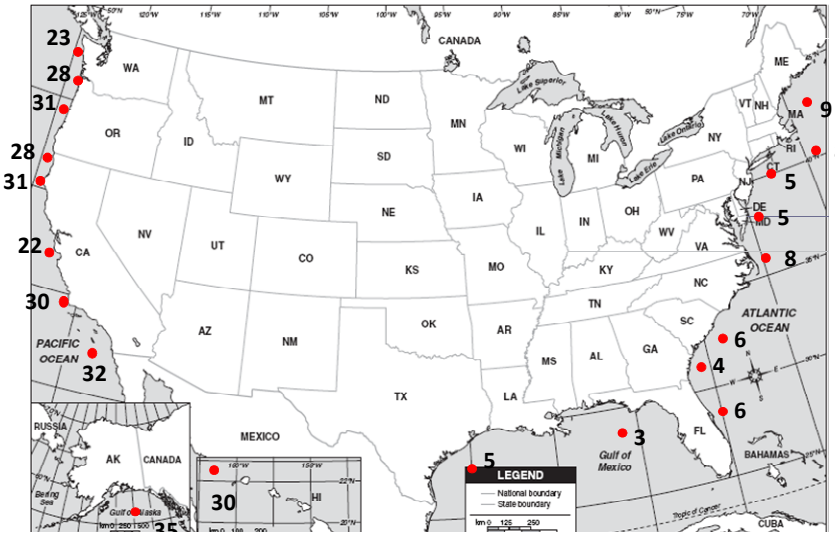


a)

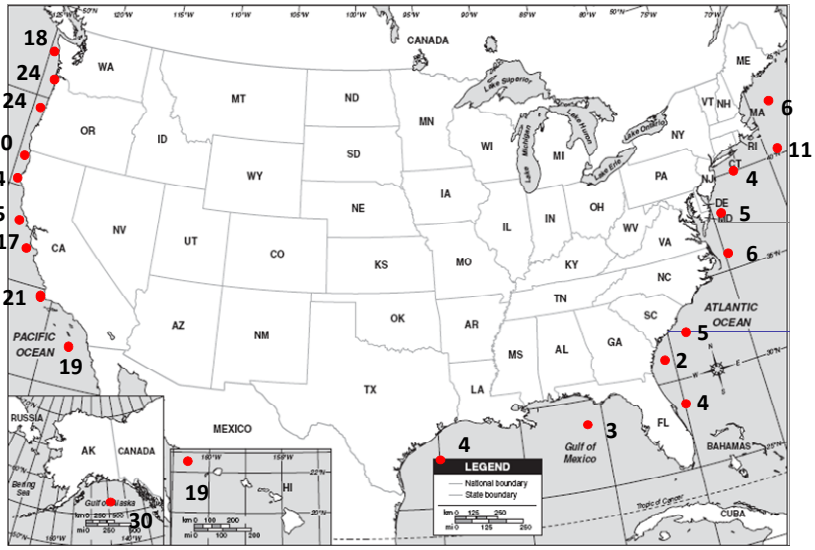


b)

**Figure 2 Annual Average Wave Power using a) the Peak Period Method and b) the Spectral Method**

## 3.2 Probability Distributions of Wave Power

A typical probability density function of the wave power level can be seen in Figure 3. The PDFs for the other 9 stations have been included in the appendix. The PDF has been normalized by the average power in order to give a better understanding of the distribution of power as it relates to the mean annual wave power. It is clear that the most probable wave power level is well below the mean.

This is true for all 10 of the stations investigated as shown in table 2.4. While there are a large number of events with power levels less than the mean the relatively fat tail of the distribution skews the average to be much higher than the mode of the distribution. The median wave power level is also well below the mean as illustrated by the cumulative density function (Figure 4) .

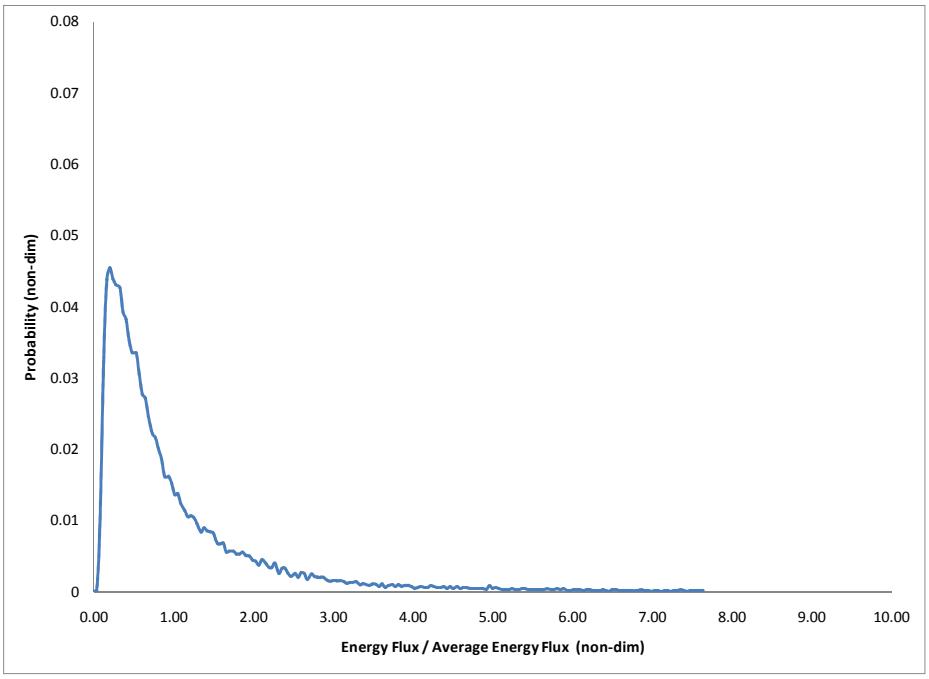


**Figure 3 Probability Density Function of Wave Power for NDBC Station 46014 19 NM North of Point Arena California**

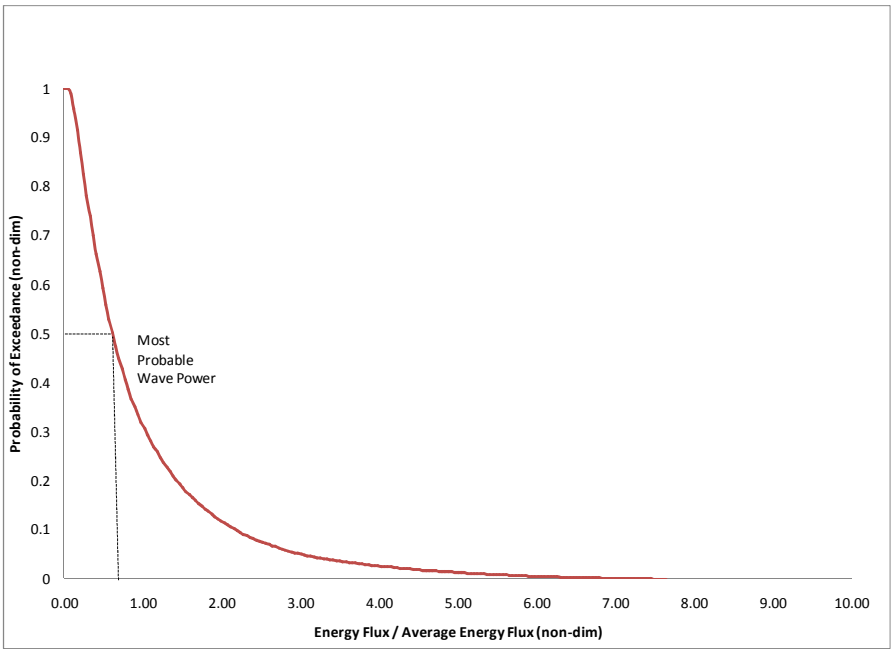


**Figure 4 Cumulative Density Function of Wave Power for NDBC Station 46014 19 NM North of Point Arena California**

The wave power PDF can also be used to determine the total annual energy available for each of the measurement stations investigated. In addition the distribution of this energy with respect to the wave power bins can also be determined. This distribution of energy over the power spectrum can be seen in Figure 5. As illustrated in the Figure the median wave power level corresponds to the highest energy bin for all the stations investigated. The distributions for the other nine stations have been included in the appendix.

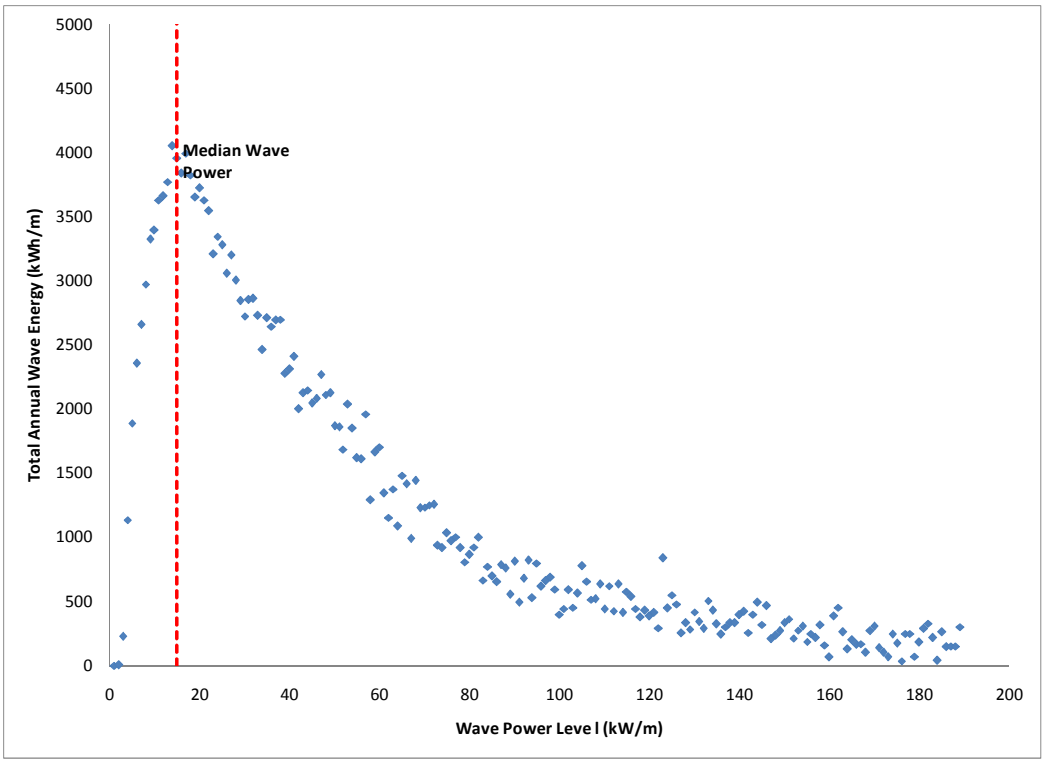


**Figure 5 Distribution of Wave Energy over the Power Spectrum**

## 4.0 Discussion and Concluding Remarks

A comparison of the wave power levels calculated using the peak period method and the spectral method show that the peak period method over predicts the annual average wave power for all the stations but one. This indicates that the peak period approach represents a non conservative method for calculating the available wave power. The peak period method is attractive, however, given its relative simplicity and the small amount of data need for the power calculations. Figure 6 provides a plot of the wave power calculated using the peak period approach versus the power calculated using the spectral approach. As can be seen in the Figure a linear trend line can be drawn through the data with and $R^2$ value of .943. This indicates that a correlation coefficient may be added to equation 5 to improve the peak period method:

$$E_{Flux} = E_L \frac{1}{8} \rho g {H_{RMS}}^2 C_g \tag{11}$$

where:

$E_L = .75$

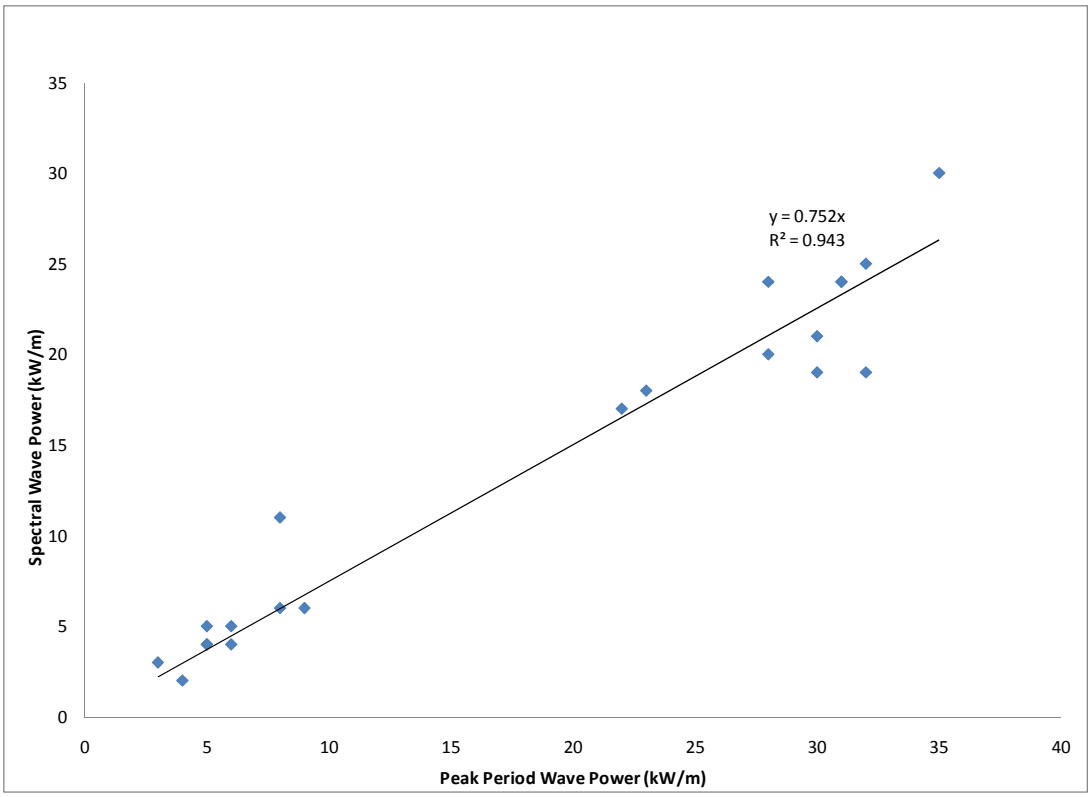


**Figure 6 Relation between Power Calculated using Peak Period and Spectral Method**

Analysis of the distribution of wave power levels and the total annual energy produced shows that the most probable power and median power levels are well below the annual average. This indicates that the annual average power may not be the best value to be used in preliminary power calculations. Since the median power level represents the power bin producing the largest amount of energy per year it might be more appropriate to use this median power level to compare the relative merits of potential sites for wave energy conversion. This median power level might also be appropriate for preliminary power calculations since it is the power level that has the greatest potential for energy production.

**Bibliography**

Agamloh, E.B. "A direct-drive wave energy converter with contact-less force transmission system." Ph.D Dissertation. Corvallis, OR: Oregon State University, 2005.

Faltinson, O.M. Sea Loads on Ships and Offshore Structures. Cambridge, UK: Cambridge University Press, 1999.

Pontes M.T., R. Aguir, H. Oliveira Pires. "A nearshore wave energy atlas for Portugal." Journal of Offshore Mechanics and Arctic Engineering (2005): 249-255.

NOAA. National Data Buoy Center. 6 June 2008 <http://www.ndbc.noaa.gov/>.

# APPENDIX 4: Lessons Learned from SeaBeavI Testing and Deployment

Note: The actual constructed and tested configurations will be documented in Joe and David's theses. The following are suggested adjustments to advance the next buoy and mooring systems.

**Buoy Components:**

The gap between the float and the spar might be too small. Viscous effects could create a significant drag force that retards the relative motion. (Dr. Yim)

Potential sources for the binding experienced in the ocean:

1. Magnetic Forces
2. Frictional Forces (exaggerated by magnetic normal forces).
3. Viscous Forces.
4. The "mystery" dent in the magnet section.
5. Misalignment caused by hydrodynamic forces.
6. Generator Damping.
7. Cogging.

The need to gather critical information from the buoy remotely was revealed.
Suggestion: All auxiliary systems be wirelessly monitored, e.g. battery charge, ballast pump operation etc., along with time stamping capabilities.

The need to remove the spar lid to charge the battery was laborious.
Suggestion: External matable battery charging through spar lid.

Wireless antenna was precariously mounted in a hazard zone. First antenna was broken from spar.
Suggestion: Flexible/whip antenna with strong bulkhead connector (note "Shakespear" antenna on Pacific Storm)

Attention to strong enclosures for components (e.g. accelerometer) for robustness.

Appropriate location and procedure for dry fit; dry testing on LTB before deployment.

For lifting specs, use full ballasted/bilge weight to ensure safe lifting operations in any configuration.

Weights and Stability: The weight and center of gravity of a floating system has a substantial impact on the overall performance of the system. When designing floating systems the effect of the weight and position of all the components must be considered during the design phase. If exact weights are unknown weights should be estimated and appropriate margins should be used to ensure that the design falls within acceptable operating limits for both static and dynamic stability. The weights and stability of the SeaBeavI were not adequately addressed early in the design phase. This led to significant performance issues for the prototype.

Structural Design: When designing structures it is always preferable to err on the side of a more conservative design instead of a less conservative one. Still it should be understood that overly conservative structures tend to be more costly to construct and in general heavier. Adding margins to the structure can have negative impacts on the system performance in that the weight and center of gravity increases and this can have an adverse impact on performance. The structure of the SeaBeavI could have been better optimized to limit the weight while still providing for adequate factors of safety.

Linear Bearings and Tolerances: It has been stated that efficient contactless force transmission requires no greater than a 5mm air gap between the magnets and the back iron. Holding this gap creates significant challenges for the design and construction of efficient linear bearings. The current bearing design requires that a .020" tolerance be held between the OD of the spar and the ID of the stainless steel sleeve used to seal the magnet section. With our current construction methods this tolerance was not achievable and significant rework was required in order to achieve a reasonable sliding surface between the two components. This tight tolerance may also have led to mechanical binding during testing of the device in the open ocean.

Sea water was allowed to reach the upper sections inside of the spar.

> Suggestions: All ballast tanks and all electrical enclosures and connectors should be waterproof.

Personnel should be dedicated to project management and quality control. All concerns and design changes are ultimately approved by them after consultation with relevant players.

Upon disassembly, it was revealed that the buoy had taken on water upon. The source of this leak must be identified.

> Suggestions: Possible leakage due to inadequate O-ring seal would suggest O-rings are inadequate for sealing fiberglass surfaces.

Construct buoy components, dimensionally to industry standard sizes as much as possible. Example, actual spar diameter 23". Suggested 24". This suggests a detailed design review (e.g. with Plasti-Fab) prior to moving forward.

Eliminate Stainless Steel Liner on inner Magnet Surface. Construct a machined mold that would allow a Composite Silica Carbide Liner. (Highly resistant to abrasion.)

Construct magnet compartment "Quarter Ring Frame" sections out of fiberglass. This would then allow the Magnet Inner Sleeve to be incorporated to the Quarter Ring Frame sections, which in turn eliminate all "leak" paths to the magnet.

Re-evaluate all tolerances. Several components on SEABEAV 1 could have been constructed with the tolerances loosened up. This would also reduce machining costs.

Add a stainless steel "Bolt Ring" to the top flange of the "Main Buoy Compartment Inner Shell" that can be drilled and tapped. We did this on SEABEAV 1, instead of using nuts on the back side of the flange.

Main Buoy Compartment "Top Ring Cover" decrease the diameter of the component that inserts into the Inner Shell. This would help at assembly.

Use larger diameter O-Rings throughout the Buoy.

Top Cover plate to Spar needs an additional O-Ring on the OD of the Bolt Circle.

Top Ring Frame also needs to have a Stainless steel Bolt Ring Infused internally.

Design Buoy and Spar to eliminate as much machining as possible.

Add Stainless Steel bolt Ring to Ballast Compartment Ring Frame.

Possible Alternative Design: Steel skeleton with fiberglass "skin", would allow steel mating surfaces and cut down on weight. (Steel has much better strength to weight ratio, and then the fiberglass would contribute the waterproofing.)

For future design considerations, SeaBeav I proved the promise that it "could not sink" – such that when virtually every pore was filled with seawater, it still could not sink due to buoyancy, foam etc.

**Spar:**

It was revealed that the spar had taken on water. Finding the source of the leakage is necessary.

Possiblities:

- Bilge pump/check valve (note: outlet prevents wave impacts from driving water in, location of outlet hole)
- Identify all leak paths in the spar. Perhaps pretest water tightness.
- Possible leakage where armature interfaces with spar components.
- Some leakage through lid bolts.
- Leakage through broken antennae hole. (this has been corrected)
- Check O-Ring compatibility with silicone (Looks a little frayed/eaten)
- Consider eliminating O-rings.

The need to operate the bilge pump locally while working on it would streamline some testing practices.

Suggestion: Bilge pump manual override.

The fill hole and the vent hole are very close together resulting in pressurized water hitting whomever is filling the ballast.

Suggestions: Ballast fill/press hole *and* vent hole on top (spacing so does not hit personnel while filling/full), or an elbow to redirect the stream.

Siphoning the water from either ballast tank (buoy or spar) proved awkward and timely.

Suggestion: Placing a drain hole in bottom of the ballast compartments.

Power take-off cable/umbilical bulkhead connections failed during ocean deployment. Suggestions:

Use a more positive bulkhead connection. Or reinforce the connector to handle mechanical loading.

**Float:**

The ballast of the buoy needs to be adjusted to match the desired mass and buoyancy. However with a single ballast compartment partial filling results in 'sloshing' and poor stability. The result was that we were forced to fill the ballast completely and sacrifice buoyancy.

Suggestions: Multiple ballast compartments for better stability (dynamic tuning)

To increase the ballast we were required to have access to a garden hose. This will not be practical for long deployments.

Suggestion: Consider sea water ballast for long tests.

**Generator Components:**

The PMLTG was constructed of magnetic materials which are highly susceptible to rust. Even though the components had two coats of electrical grade machine resin, there was still rust on the inside of the armature laminations. It is also expected that the translator lamination and magnets may also have some exposure to salt water. For these reasons, all generator components should be covered in a special salt water sealant coating. After they are coated and sealed, all components should be inspected with a quality control check performed by a designated professional.

**Magnetic Normal Forces:**

In a perfectly machined and centered device with no mechanical play in the bearing strips, the normal force due to the armature's attraction between one side of the magnet section and the other would be net to zero. Any offset in the equal distance air gaps will produce high levels of magnetic normal force for the entire length of the armature. High magnetic normal force can contribute to the bearing strips frictional force despite the proposed bearings strips having low theoretical friction coefficients. In a device of this nature, the effects of this should be better understood and incorporated into the design. Other contributions to this effect would be the bearing design, the design tolerances, verses what was actually achievable with the method of construction implemented.

**PMLTG Stroke limitation:**

Early in the design process it was known that there would be a natural stroke limiting force imposed by the presence of the low reluctance armature in the center of the 16 pole magnet section. Within the three foot stroke, cogging forces were minimized to within acceptable limits of the design geometry and the armature is relatively free to move under sufficient force. The forces to remove the armature outside of the translator stroke limits are much greater. The magnetic limit end effect hinders the relative motion of the spar and float system outside the stroke of the PMLTG. This end effect limit seemed to have detrimental effects on the overall hydrodynamic functionality of the buoy. A generator which would allow the float to move more freely beyond the limits of the generator may be an advantage.

**Mooring System:**

Due to issues with the tensioning system, the taught moored wave energy conversion concept was not adequately tested during either the bay testing or the open ocean testing. Without either a well designed scale model test or a successful test on a tensioned mooring at prototype scale it is difficult to say whether the performance of the system would have been significantly different if it could have been moored as originally intended. An effective means of installing the prototype on a tensioned mooring without the use of divers could enable a full scale test of the taught moored concept as designed. A well designed experiment at small scale could also be used to investigate the performance of the system without further full scale testing.

Block and Tackle system did not prove effective in its current configuration. Use of block and tackle is currently in "time out".

> Suggestions: Improvements include delrin ring where slides through hole in bottom of spar. In bay could have flipped configuration so as to tension from anchor. Adding a float to the lower block would ensure alignment of tensioning lines. Pursue a tension moored system, using a submersible electric winch allowing tension control without the use of divers.

Marker float was presumably hit by a boat and marker light was missing.
Suggestion: Larger Marker float (e.g. 5 ft. dia.), with caged/solid mounted light. Look into RadCon to aid in navigation in addition to a light. System sends a signal to the radar on ships to indicate that there is an object at those coordinates instead of the radar reflector which can be limited in its effectiveness in larger seas.

**Deployment:**

Device Installation: Due to the greater than anticipated weight of the SeaBeavI it became impractical to install the device using the ships crane on the Pacific Storm. While a larger vessel could have been used to install the device using a crane as intended. A towing operation was executed with the Pacific Storm. While the SeaBeavI was not designed to be towed in the open ocean the towing system used by the Pacific Storm performed well in the relatively benign sea state on the day of ocean testing. This indicates that the device can be towed, but only when the conditions are appropriate. If the device is to be tested in larger sea states this will require that the device be towed out in calmer seas and left installed over a period of days or weeks. This will require significant improvements to the PADA and extensive proof testing of the system to ensure that it will survive an extended deployment.

Discussions regarding the large forces that were required to achieve relative motion between the buoy and the spar resulted in the suggestion that the buoy and spare should be shipped separately to ensure safe transport.

Towing is a good approach during appropriate conditions (<2m significant wave heights and <15knot winds), including tow line arrangement with power take-off cable/umbilical, 2lb. line floats etc. (in Appendix I).

Better to tow against current (best at slack tide)
RHIB is essential for coordinating the buoy drop and lift off dock, working with the buoy, and towing in the bay. Once in open ocean it was difficult to maintain tracking when attached to buoy, esp. for long distances.

> Suggestions: RHIB could go out alongside the main vessel, but not be attached to the buoy, or RHIB could be towed behind buoy or ship.

**Power Analysis and Data Acquisition (PADA):**

Pacific Storm can hold station to allow PADA equipment in protective cabin. For multiple day testing for Navy work, need to prepare floating PADA (current enclosure can be placed in dedicated float, potentially using isolated water/ocean cooled resistors instead of large load bank)

During multiple day testing we will need to provide power to the onboard systems via the PTO or possibly with solar/wind to keep battery charged.

There was a need to synchronize the cRIO data with the oscilloscope. This should be realized with the utilization of the PADA.

**Test Personnel:**

Note: Test and deployment personnel should share any concerns immediately with the Test Coordinator, who will stop the operation until the concerns are addressed.

Communication with key personnel was not always prompt, occasionally resulting in delays.
Suggestion: Key personnel should have radios.

It is important that personnel should never be under lifted loads.

**Bay Testing:**

Test coordinator - stays on pier at all times giving instruction.
HMSC Pier Crane Operator
Crane Signal Personnel (should have 2 people versed in crane hand signals)
RHIB driver plus two personnel
Tasked researchers

**Ocean Testing:**

Test Coordinator
Ship's Captain
Ship's Engineer and Vessel Crane Operator
HMSC Pier Crane Operator
Crane Signal Personnel (should have 2 people versed in crane hand signals)
RHIB driver plus two personnel
Tasked researchers

**EMF testing:**

Ensure that the cable spacers are at the site of magnetometer.

**AWAC:**

Make sure pelican hooks face outward to ensure that the hook completely exits the Eye Hooks.
Look into purchasing larger rings for bridle system.
Camera verification of the unit being upright on the sea floor.

**Additional Useful Tools:**

Portable and mountable electric winch
Generator back-drive capability (need energy source, possibly ship power)
First aid kit
Handheld scope
Air compressor to empty ballast

**Open Research Questions:**

1. **Linear Bearings and Tolerances:**
    a. What bearing materials are most appropriate for linear bearings in the marine environment?
    b. Are roller bearings more appropriate than linear bearings?
    c. What are the frictional losses in the system and how do these losses depend on material/tolerance?
    d. What sorts of tolerances are achievable given best manufacturing practices?
    e. What is the effect of air gap on hydrodynamic resistance in the air gap?
    f. What is the effect of tolerance on binding?
    g. What are the long term wear characteristics of these types of bearings?

2. **Mooring System:**
    a. Is a taught moored two body wave energy conversion system a viable concept?
    b. What sorts of dynamic response can be expected from a taught moored wave energy conversion system?
    c. What sorts of mooring tensions can be expected in such a system?
    d. What are the effects of generator damping on the system dynamics?
    e. What are the effects of mooring tension on the system dynamics?
    f. What are the effects of mechanical resonant control (dynamic ballast control) on the system?
    g. What sort of power can be generated from a taught moored wave energy conversion system?
    h. What sorts of vertically loaded anchors are most appropriate for wave energy applications?

3. **Generator Components:**
    a. Could generator laminations be embedded in composite fiberglass molds rather than being baked in resin?

4. **Magnetic Normal forces:**
    a. Do magnetic normal forces pose significant scaling up problems?

5. **PMLTG Stroke Limit:**
    a. Would a non-stroke limited generator produce higher average power because of the advantages of higher velocities?
    b. What generator design would be best for non-stroke limited applications?
    c. What are the generator values for a generator long enough for stroke limited year round deployment? What advantage does either coil switching or non-stroke limiting have over this?
    d. What is the ideal stroke length of a full scale device? Smaller or larger than the maximum buoy relative motion? Does considering harmonic states of buoy operation change this value?
    e. Would a fully dual sided reluctance tapered armature be an operational advantage? Salient or non-salient? Airgap with tapered back iron?
    f. What is an expectable level of magnetic flux leakage? What are the tradeoffs between flux leakage and cogging forces?

6. **PMLTG Efficiency verses System Operation and System Efficiency:**
    a. Is there an advantage, economic or otherwise to employ such a design philosophy?
    b. What is the cost of using back iron in the armature and how much does it affect the energy density of the device?
    c. Would using such a design philosophy accelerate the research and development of devices to allow for known simplifications in design for the sake of rapid prototyping?

**Appendix I**
**(Reference Pictures)**


Fig. 1  SeaBeav I being lifted off the pier into the bay.

Fig. 2  Tow line arrangement with power take-off cable/umbilical, and 2lb. line floats.


Fig. 3  SeaBeav I ocean testing.
(Note that the Pacific Storm was able to hold station in order to allow the power take-off cable above to go directly to the power analysis and data acquisition system on the vessel).