Soil Fumigation Equipment

Cooperative Extension Service • Oregon State University • Corvallis

Extension Bulletin 813 • June 1963

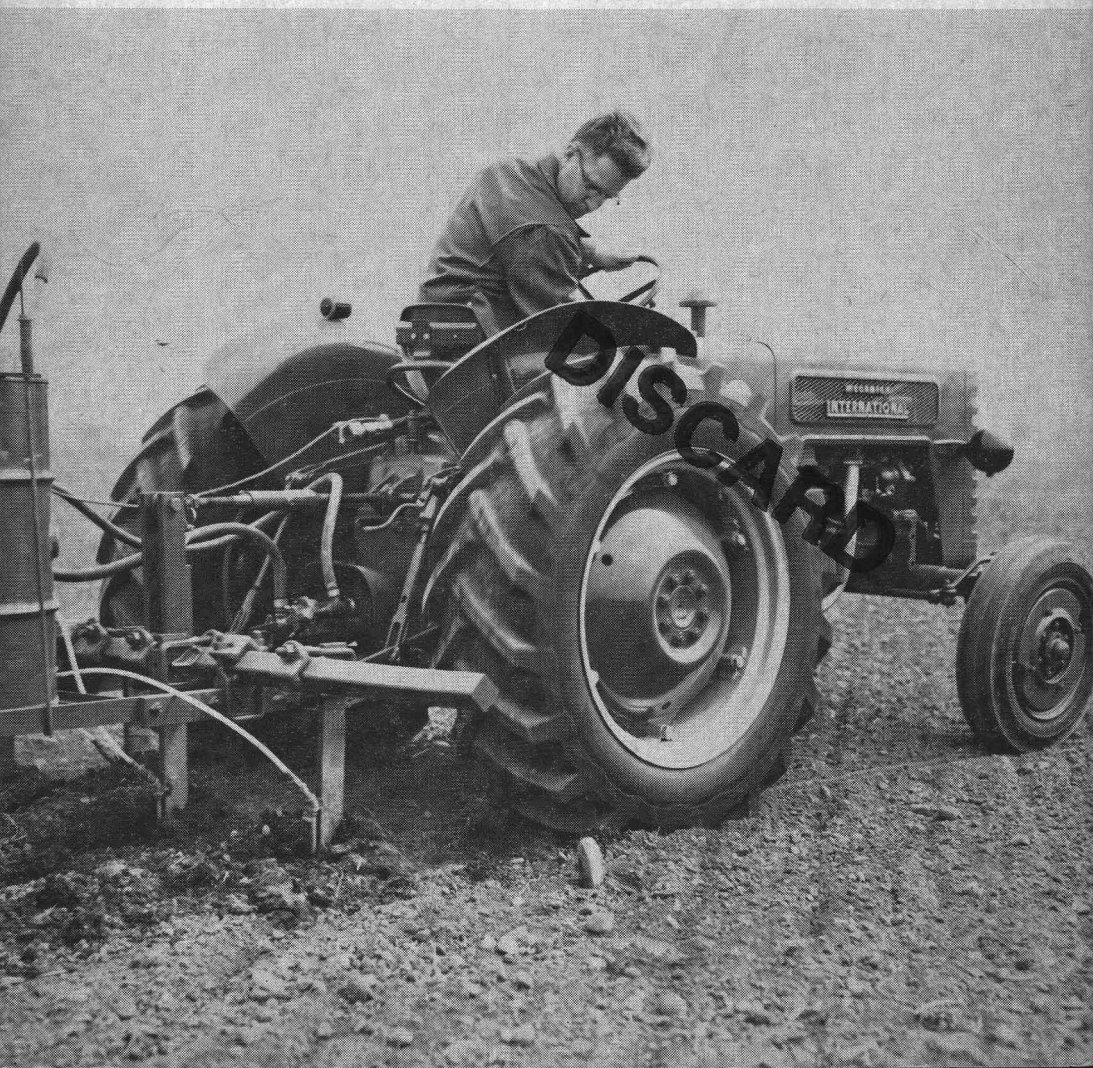

Contents

Soil Fumigation Equipment

GLEN E. PAGE, *Associate Agricultural Engineer, Oregon State University*

Soil fumigation with chemicals is a common method of controlling nematodes, symphalans, some plant diseases, and certain insects that feed on crop roots. These chemicals are usually marketed and applied in a liquid form. Shortly after such liquids are injected into the soil, they vaporize into gases which disperse throughout the spaces between soil particles.

Before applying these chemicals, labels giving the manufacturer's recommendations for use of the specific material should be read carefully. The user should be familiar with instructions regarding health hazards to the operator, soil preparation, the best soil temperature and moisture conditions for treatment to help hold gas temporarily, the proper time interval between treatment and planting to avoid plant injury, and proper methods of cleaning application equipment.

The efficiency of soil fumigation for nematode and symphylan control is affected by soil composition and structure, temperature, and moisture. How these factors influence fumigation is only partly understood. Best results are being achieved in sandy-type soils, and erratic results are frequently obtained in peat or heavy clay soils. Unfortunately, many serious nematode pests occur in peat and heavy clay soils.

Some manufacturers claim that their materials are effective within a wide range of soil temperatures, 40° F. to 85° F. at application depths, but most materials are more effective at the higher temperatures. Great importance is placed on the moisture content of the soil at the time of application.

Present recommendations call for a soil moisture content slightly below field capacity. If the soil is treated when the moisture content is up to field capacity, much of the void space in the soil between soil particles is occupied by water, and chemical fumes cannot move through the soil as they should. Soil to be treated should be in seedbed condition, free from clods more than three-fourths of an inch in diameter, and free from unrotted crop residue.

Other items influencing the efficiency of soil fumigation control are: timing the treatment with the development of the pest, use of the correct dosage, and the efficiency of application equipment. A side benefit often achieved along with the control of symphylans or nematodes is a reduction in weed population after fumigation.

In spite of the many problems involved, soil fumigation has become popular for control of various nematode pests. It is gaining in popularity for control of symphylan and some plant diseases. Infested areas may involve a home garden or a field of several acres. The entire area is usually given a blanket treatment. For nematode control on some crops, application may be confined to potential rows of the subsequent crop. A row or side-dressing treatment with a small amount of material along the rows of established plantings has been developed for some crops.

Methods of Applying Fumigants

Treatment of small localized areas by home gardeners, florists, and nurserymen may be made by: 1) sprinkling the material into a shallow trench and covering immediately with soil. 2) pouring a measured amount of material into holes punched into the soil; or 3) applying material with a hand-operated dispenser.

If the infested area is greater than a few thousand square feet, power-drawn applicators (usually of a chisel type) are used. Other machines for applying fumigants are plow-sole applicators, blade applicators, and multiple-sweep applicators. Fumigants are applied by a pressure system or by a simple gravity feed.

Trench method

The area to be fumigated should be laid out in rows nine inches apart. Using a hoe or other suitable tool, a narrow trench six to eight inches deep along one edge of the area to be treated should be dug. Soil fumigants should then be placed in a glass-jar applicator made by punching two holes in opposite edges of the lid. Soil fumigants should be poured from the jar applicator along the bottom of the trench as shown in Figure 1. The amount of fumigant required for different rates of application per acre is shown in Table 1.

Immediately after applying the fumigant in the bottom of the trench, the

Figure 1. Applying soil fumigants by the trench method.

Table 1. Length of furrows that can be treated with one cup, 8 fluid ounces, of fumigant

Furrow spacing	Application rate gallons per acre						
	10	15	20	25	30	35	40
Inches	*Feet of row*						
6	544	363	272	218	181	155	136
8	408	272	204	163	136	117	102
9	363	242	181	145	121	104	91
10	327	218	163	131	109	93	82
12	272	181	136	109	90	78	68

trench should be closed. A new trench nine inches from the first should then be opened, and the same treatment followed as for the first trench. Each succeeding trench should be opened, the chemical applied, and the trench filled in succession until the whole area is treated.

Hand-operated applicators

A popular applicator for treating home gardens, greenhouses, and sites for planting ornamentals is the hand-operated dispenser. It looks like a giant hypodermic needle (Figure 2). This applicator usually consists of a handle, reservoir tank, injection pump, depth

Figure 2. The area to be treated with a hand-operated injector is marked off in a regular grid pattern. Points where injections will be made are indicated by white markers.

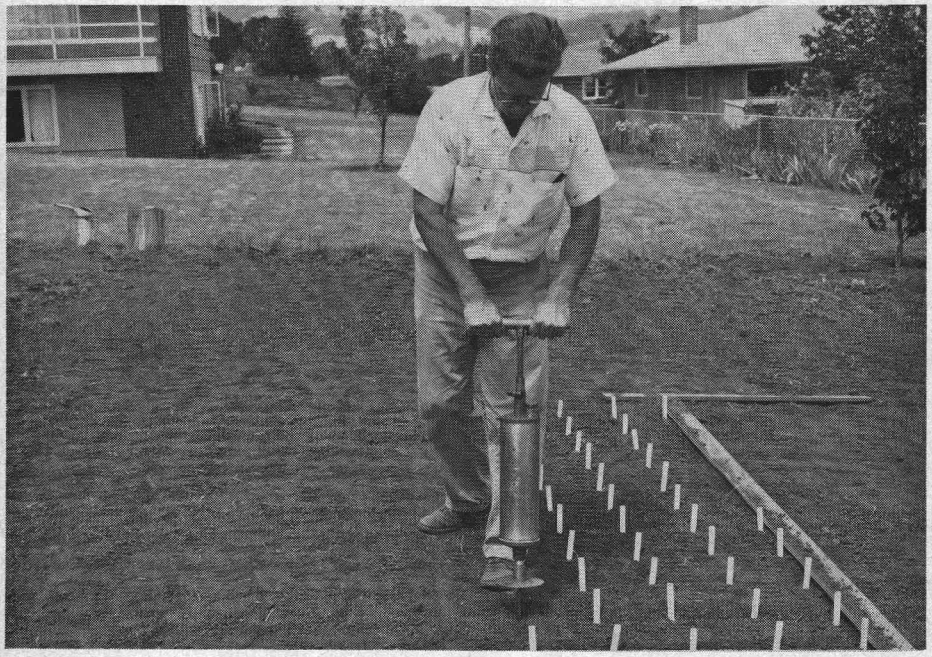

guide, delivery tube, and a device for regulating the amount of material applied for each injection. Application is made by pressing the dispenser into the soil and pushing down on the handle, thus forcing the fumigant into the soil. Soil prepared for treatment should be marked off in a grid to insure injection of the material at proper intervals. The operator can close the holes made by the delivery tube by stepping on each of the previous injection sites to compress the soil. For small areas, the material may be applied by punching holes with a sharp rod and then pouring the desired amount of material into the bottom of each hole with the aid of a funnel or pipe. A water seal

Table 2. Dosage rates, milliliters per injection equivalent to gallons per acre

Application rate	6- by 6-inch spacing	9- by 9-inch spacing	Application rate	6- by 6-inch spacing	9- by 9-inch spacing
ml.			*ml.*		
.1	4.6	2	2.6	120	53
.2	9	4	2.7	124	55
.3	14	6	2.8	219	57
.4	18	8	2.9	133	59
.5	23	10	3.0	318	61
.6	28	12	3.1	143	63
.7	32	14	3.2	147	66
.8	37	16	3.3	152	68
.9	41	18	3.4	156	70
1.0	46	20	3.5	161	72
1.1	50	23	3.6	166	74
1.2	55	25	3.7	170	76
1.3	60	27	3.8	175	78
1.4	64	29	3.9	180	80
1.5	69	31	4.0	184	82
1.6	74	33	4.1	189	84
1.7	78	35	4.2	193	86
1.8	83	37	4.3	195	88
1.9	87	39	4.4	203	90
2.0	92	41	4.5	207	92
2.1	97	43	4.6	211	94
2.2	101	45	4.7	216	96
2.3	106	47	4.8	221	98
2.4	110	49	4.9	226	100
2.5	115	51	5.0	230	102

may be applied by soaking the upper inch of treated soil with a lawn sprinkler. Nematocides are injected to a 6-inch depth. Fumigants for the control of symphylans may be placed 6 to 10 inches deep. Most applicators of this type are provided with additional delivery tubes or an adjustable depth guide to enable the operator to make an application at different depths. Table 2 gives dosage rates per injection in milliliters for application rates at different gallonages per acre for injection spacings of 6 inches by 6 inches and 9 inches by 9 inches.

Power-drawn applicators

Nearly all large-scale treatments are applied with power-drawn equipment, usually consisting of some type of chisel applicator. The effectiveness of this type of equipment depends on (a) a continuous flow of materials through the applicator tubes into the chisel furrows; (b) subsequent lateral diffusion through the soil between the chisel paths; and (c) vertical diffusion of the fumigant in the upper foot of soil.

Frequently, applicator tubes become plugged, leaving untreated areas in the field. Clods or excessive unrotted organic material may interfere with lateral diffusion between chisel furrows, leaving areas in the field untreated. Better control of nematode pests is frequently obtained by plow-sole application in friable soils. Plow-sole application is less effective in heavy soils which are apt to be cloddy and to interfere with the dispersion of the fumigant.

To offset the problem of lateral diffusion, a blade-type applicator and later a multiple-sweep applicator were designed and built at Oregon State University.

Chisel or tooth application equipment has been used for several years for most large-scale fumigation. Fumigants are injected behind chisels or cultivating teeth spaced 9 to 12 inches apart, and operated at an injection depth of 6 to 8 inches. This equipment is very similar to that used for the application of aqua ammonia and other liquid fertilizers. The fumigant is pumped from the supply tank with a gear-type, power-take off pump, equipped with a built-in pressure regulator and bypass, to the metering orifices. (An orifice is a small opening through which a passing liquid is metered—see Figures 3 and 4). Liquid pressures used at the orifices are 10 to 60 pounds per square inch. Rate of application is controlled by tractor speed, spacing between chisels, size of orifice, pressure at the orifice, or addition of a diluent. The fluid flows from the orifice to the base of the shank by gravity through tubes or pipes. Screens or filters are provided to keep metering orifices from plugging.

Chisel applicators with ground-driven gang metering pumps are available (Figure 5). Application rate per acre is independent of ground speed, and is determined by the choice of drive sprockets and by adjusting chisel spacing. The metering orifice at chisel is not required when there is a pump for each chisel.

Since most fumigants are highly corrosive to iron, all plumbing should be made from copper, brass, or stainless steel. Current fumigants are very destructive to natural rubber and most synthetic rubber hoses. Polyethylene tubing should be used where possible instead of rubber hose.

The plow-sole applicator puts the liquid fumigant in the bottom of the furrow just ahead of the plow; then it is immediately covered with soil. This machine is simple in design with no

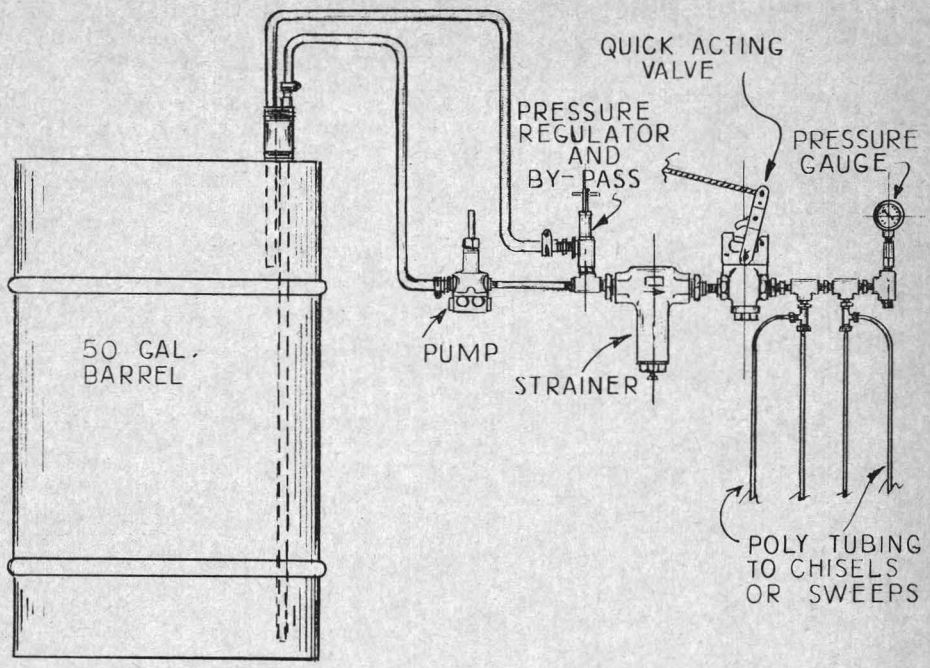

Figure 3. A fluid system for chisel or sweep applicators.

Figure 4. A fluid system for chisel application with a power take off pump.

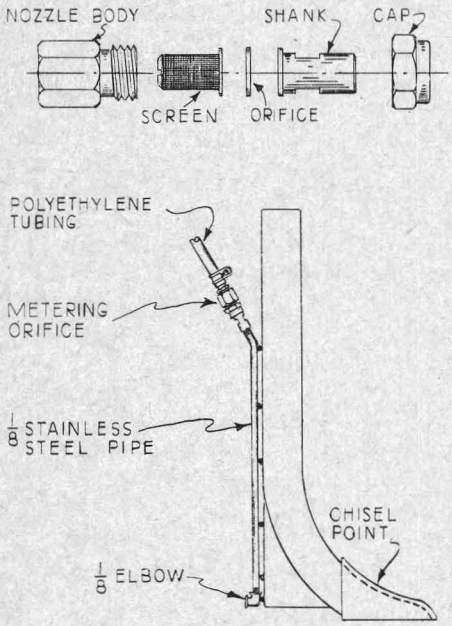

movable parts likely to give trouble from corrosion or clogging. It can be constructed by a careful workman.

The plow-sole applicator consists of a constant-flow supply tank, a fixed orifice flow regulator for each liquid line, a quick shut-off valve, piping, and plastic tubing. Since most current soil fumigants are corrosive, metal parts in contact with fumigants should be resistant to corrosion.

The quick shut-off valve should have a brass body, and the piping should be copper, brass, or stainless steel.

The constant flow tank must be airtight, except for the air vent which introduces the air within one inch of the bottom of the tank. The purpose of this location is to regulate the air pressure in the supply tank to compensate for the gradual decrease in the head of the fumigant in the tank. All fittings to the tank must be airtight so the only

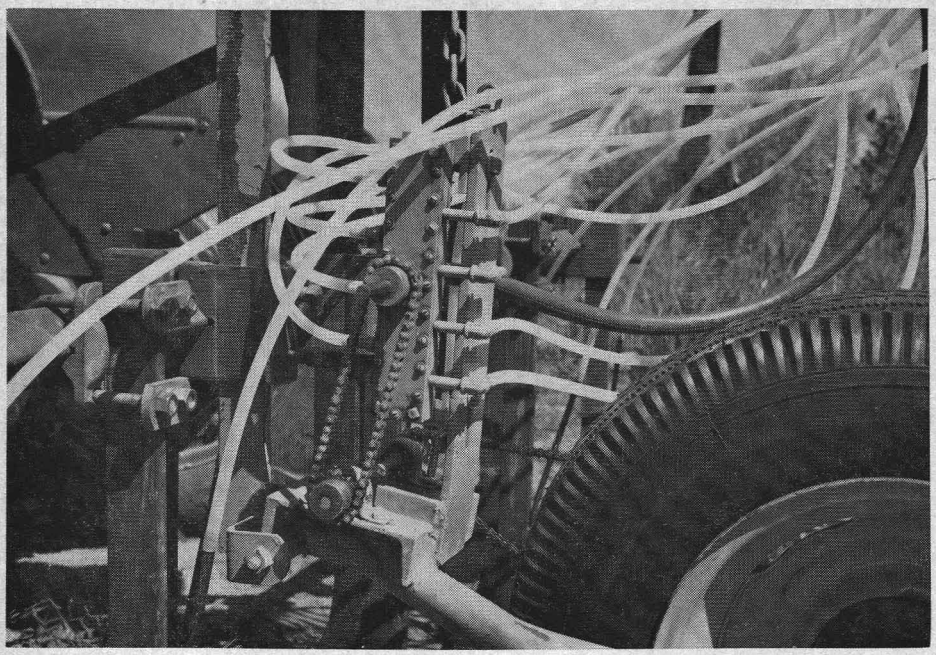

Figure 5. A ground-driven gang pump meters the flow of fumigant to each chisel individually.

air entering the tank goes through the air vent. Use of an interchangeable air vent assembly (Figures 6 and 7) permits the use of the fumigant container as a constant flow tank. The flow regulator consists of a one fourth inch nozzle body, fitted with a stainless steel orifice disk. Once fitted with the proper orifice and adjusted to the proper height, no further attention is needed for the same fumigant and the same rate of application. For a two-way plow, two quick shut-off valves are needed, but only one quick shut-off valve is required for a one-way plow. A flow regulator and delivery tube must be provided for each plow bottom. Most plow furrows are wider than the recommended spacing for the fumigant, and require two regulators and delivery tubes per furrow. A polyethylene tube carries the fumigant from the regulator to the bottom of the furrow. The tube is clamped to the plow beam or some other part of the plow to hold it in the correct position.

Figure 6. A fluid system for a plow-sole applicator.

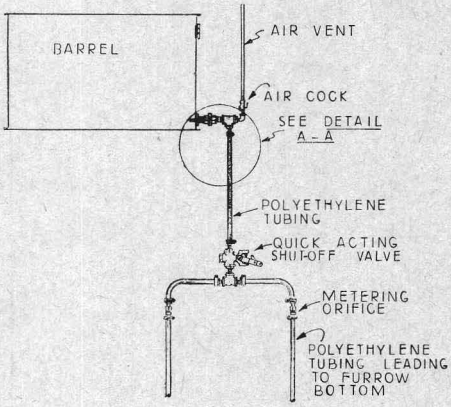

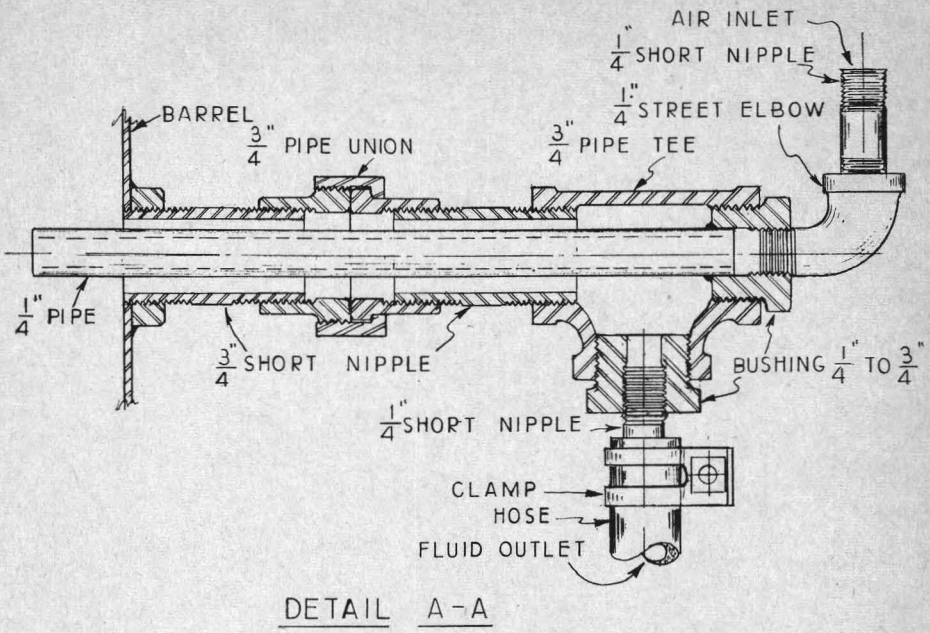

Figure 7. An air inlet and fluid outlet for a constant head tank. All fittings are of brass.

Figure 8. A blade applicator showing the location of nozzles.

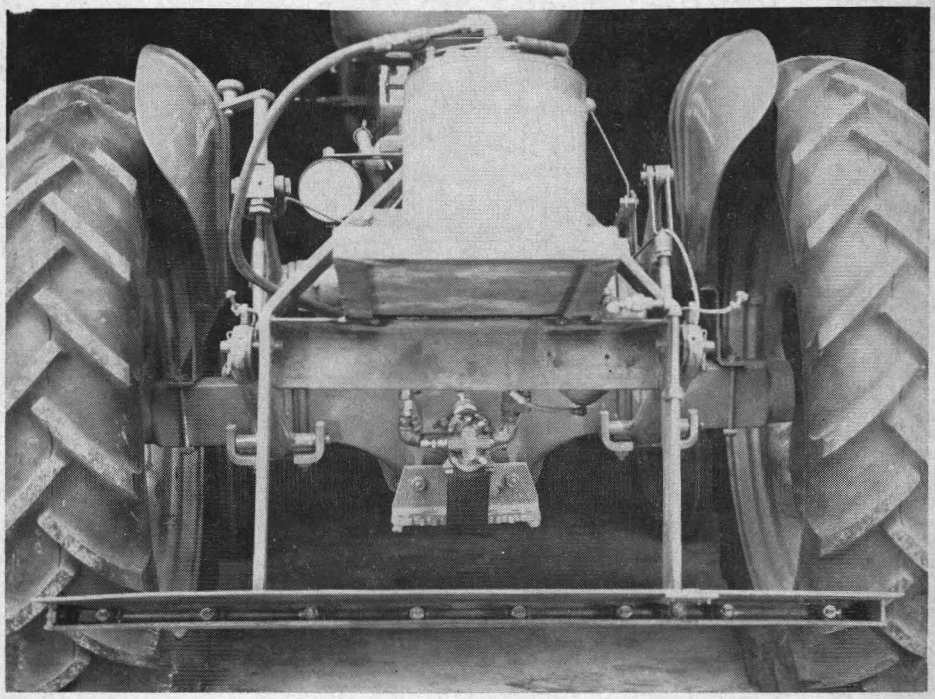

OSU blade and multiple-sweep applicators

The blade applicator was designed to insure a more effective injection pattern than is obtained by plow-sole or chisel applicators. The fumigant is applied as a continuous sheet at injection depth, eliminating most of the difficulties encountered in obtaining efficient lateral diffusion. The injection boom, mounted in a protected recess beneath the blade (Figure 8), sprays the fumigant into the soil as it breaks over the rear edge of the blade. The spray shield protects the boom from soil particles and provides a void behind the cutting edge of the blade. This allows spray from the fan-type weed nozzles to treat the entire width of the soil as it falls from the after-edge of the spray shield. Several nozzles are used to insure complete coverage for the entire area corresponding to the width of the blade. The Noble blade and other similar cultivation blades have been fitted for soil fumigation by the addition of suitable spray shields and fluid systems.

The multiple-sweep applicator (Figures 9, 10, and 11) uses high lift tillage sweeps modified to allow for mounting a Spraying System $\frac{1}{8}$K nozzle below a steel plate welded between the top edges of the wing blades of the sweep. With the sweeps properly spaced, the chemical is placed as a continuous sheet at injection depth. Any undecomposed crop residue tends to hang up on the straight-blade fumiga-

Figure 9. A multiple-sweep applicator.

tor, but it will clear itself on the multiple-sweep and V-blade applicators.

The fluid system is almost the same for the sweep and chisel applicators.

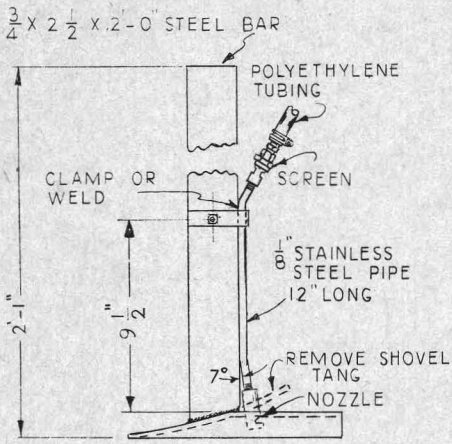

Figure 10. Detail of application sweep.

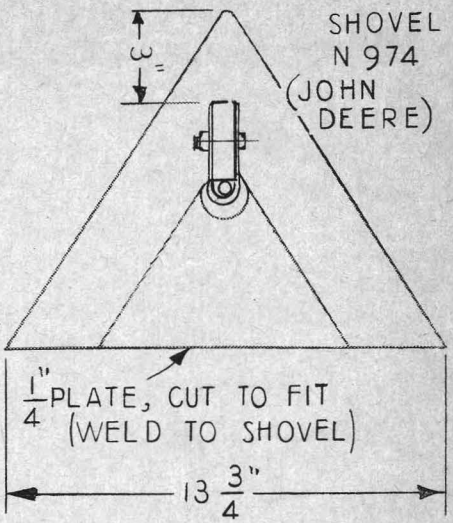

Figure 11. Location of the spray shield.

The $\frac{1}{8}$K nozzles used with the sweeps require a fluid pressure of 20 psi to get good lateral coverage.

Use of a Plastic Cover Layer

Soil fumigants with high vapor pressure, such as methol bromide, tend to dissipate from the soil before they have a chance to effect a control unless the gas is confined at the soil surface. Polyethylene plastic sheet is widely used as a means of confining fumigant vapors at the soil surface. When treating small areas such as a home garden and nursery beds, a 4 to 8 mil polyetheylene sheet should be spread over the area to be treated. A small trench or furrow should be made along the edges of the area. About four inches of the sheet's edge should be inserted in the furrow and covered with soil. Bags of straw hold the plastic sheet off the soil surface. The methol bromide can then be released under the plastic. At the end of the desired exposure period, the cover should be removed.

When large areas are to be treated with high vapor-pressure fumigants, special equipment can be used to inject them into the soil and lay the 2 mil plastic film in a single operation. (See Figure 12.)

If solid treatment is desired, the treatment should be carried out in two operations, treating alternate strips. At the end of the exposure time, plastic films should be removed, and the strips missed in the first operation should then be treated.

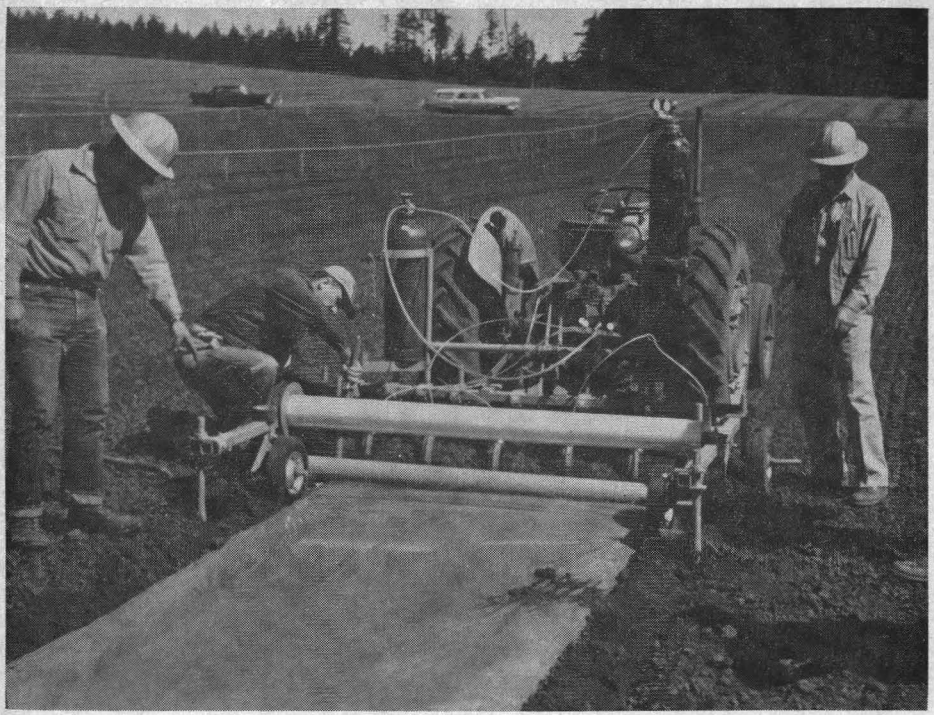

Figure 12. A soil fumigation injector with an attachment to lay plastic film.

Rate of Application

Prior to calibrating equipment, speed at which the applicator can be drawn through the soil should be determined. This should be done for the plow applicator while the field is being opened for fumigation. For either the blade or chisel applicator, a few trials through the field should be made. Tractor speed can be determined with a tractor-tachometer or a spray speedometer.

Distance between nozzles or orifices can be determined for the plow-sole applicator by dividing the width of the cut of the plow by the number of metering orifices used. The distance between nozzles can be measured directly for the blade applicator. The distance between shanks should be measured for chisel and multiple-sweep applicators.

By use of the following formula, equipment can be calibrated by finding the number of seconds required for the fumigant from one nozzle or metering orifice to fill a pint measure:

$$T = \frac{44{,}550}{SRD}$$

Where T = time to fill a pint measure (seconds)

S = speed (miles per hour)

R = applicator rate (gallons per acre)

D = distance between nozzles (inches)

Example

Using the formula above, find the time in seconds for the fumigant from one metering orifice to fill a pint jar when chisels are spaced 9 inches apart, tractor speed is 2 miles per hour, and rate of application is 30 gallons per acre:

$$T = \frac{44{,}550}{(2)(30)(9)} = 82.5 \text{ seconds or } 1 \text{ min. } 22\tfrac{1}{2} \text{ sec.}$$

By proper adjustment of pressure and the right choice of orifice, the desired flow may be obtained in the proper time.

Nozzle and orifice manufacturers have tabulated application rates for various fluid pressures and ground speeds, along with correction factors to be applied for various spacings and chemicals used.

Soil Fumigation Procedures

The following check list is included to assist those who may not be familiar with soil fumigation procedures.

Before treatment, be sure that—

- Soil is in a good seedbed condition; free of large clods and excess unrotted plant residues.
- If a plow pan exists, subsoiling takes place prior to fumigating for symphalam control.
- Soil temperature at the application depth is within the limits of the manufacturer's recommendations.
- The applicator is properly assembled and calibrated.
- You are familiar with the manufacturer's instructions.

During treatment, be sure that—

- The applicator is functioning properly at all times.
- Application depth and tractor speed are uniform.
- Applicator-treatment width is maintained so all areas are treated.
- The tractor is never in reverse when the applicator is in the ground.

After treatment, be sure that—

- Soil surface is firmed with a cultipacker or similar implement.
- Soil is left undisturbed for the time specified for the chemical.
- The applicator is thoroughly cleaned, leaving an oil film over all surfaces as a protection against rust and corrosion.
- Soil is aerated at the end of the specified period with a disk or harrow to aid final escape of the fumigant.
- Planting is delayed in accordance with the recommendations of the manufacturer.