BUCKLING OF THIN-WALLED PLYWOOD CYLINDERS IN TORSION

Information Reviewed and Reaffirmed

August 1960

No. 1529

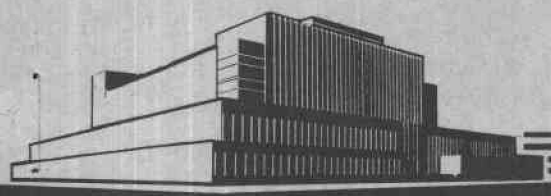

FOREST PRODUCTS LABORATORY
MADISON 5, WISCONSIN

UNITED STATES DEPARTMENT OF AGRICULTURE
FOREST SERVICE
In Cooperation with the University of Wisconsin

BUCKLING OF THIN-WALLED PLYWOOD CYLINDERS IN TORSION[1]

By

H. W. MARCH, Mathematician
C. B. NORRIS, Engineer
C. B. SMITH, Mathematician
and
E. W. KUENZI, Engineer

Forest Products Laboratory,[2] Forest Service
U.S. Department of Agriculture

Summary

This report presents a theoretical analysis and the results of tests on the buckling strengths of thin-walled plywood cylinders in torsion. The theoretical analysis leads to the expression $\tau = k\, E_L \frac{h}{r}$ for the buckling stress. The coefficient k is determined by the plywood construction, the direction of the face grain, and a parameter which is a function of the dimensions of the cylinder. Theoretical curves are presented that can be used to find the value of the constant k for a cylinder of given dimensions and type of plywood construction. Experimentally and theoretically determined values of k are considered to be in satisfactory agreement if allowance is made for the scattering of experimental values associated with imperfections of construction and material and for the lack of complete agreement between the elastic constants of major and minor test specimens.

Introduction

The buckling stress of a thin cylindrical plywood shell in torsion depends upon a number of variables, such as the dimensions of the shell,

---

[1]This report is one of a series of progress reports prepared by the Forest Products Laboratory to further the Nation's war effort. Results here reported are preliminary and may be revised as additional data become available. Original report dated June 1945.

[2]Maintained at Madison, Wis., in cooperation with the University of Wisconsin.

the construction and the elastic constants of the plywood, and the orientation of the orthotropic axes of the plywood. Because of the large number of combinations of these variables, a testing program designed to establish empirically a formula for determining the buckling stress would be an extremely formidable undertaking. If, however, a method of determining the buckling stress theoretically can be developed even though this method is approximate, a smaller number of tests will suffice to confirm the main features of the theoretical treatment.

In the present report an approximate theoretical treatment is given for plywood cylinders having the grain of the face plies at any angle with their axes. The principal results of the analysis are given in a set of curves for the cases where the grain of the face plies makes angles of 0°, 90°, and 45° with the axis of the cylinder.

The buckling of plywood cylinders in torsion is one of a large number of problems included in a unified treatment of the stability of plywood sheets given in a recent paper by L. H. Donnell.[3] The purpose of that paper and that of the present report are quite different. In that paper is given a formula intended to be applicable to a wide range of problems in which the buckling stress is expressed as a function of a number of parameters. By calculating the buckling stress for each of a number of combinations of values of the parameters, the minimum buckling stress can be determined by a series of numerical operations. The purpose of the present report is to furnish a series of curves for the single problem under consideration. From them the buckling stress can be read for a given cylinder provided that the face grain has one of the three orientations for which the curves were drawn. Donnell[4] has also given a theoretical treatment of the stability of isotropic cylinders in torsion and the results of a series of tests on such cylinders. In his paper, references may be found to the literature of the problem for isotropic cylinders.

Mathematical Analysis

Elastic Constants of Wood. Choice of Axes-- Structure and Orientation of Plywood

As in previous reports[5] issued by the Forest Products Laboratory dealing with the elastic behavior of wood and plywood, wood is considered

---

[3]Donnell, L. H., "The Stability of Isotropic or Orthotropic Cylinders or Flat or Curved Panels -- Under any Combination of Compression and Shear." N.A.C.A. Technical Note No. 918, December 1943.

[4]Donnell, L. H. "Stability of Thin Walled Tubes in Torsion." N.A.C.A. Twentieth Annual Report No. 479, 95-116, 1934.

[5]Forest Products Laboratory Reports Nos. 1300, 1312, 1316, 1322, A, 1503.

to be an orthotropic material. Reference should be made to these reports for details concerning the elastic constants of wood and plywood.

For definiteness, the plywood in the cylinders considered will be taken to be made of rotary-cut veneers of the same species of wood. When this is not the case, suitable modifications may be made of the constants that appear in the analysis and as parameters in the families of curves expressing the results. These modifications are explained in several of the reports to which reference has been made and in particular in the appendix to Forest Products Laboratory Report No. 1316. It is to be expected that the theoretical curves are applicable if parameters appropriate to a given construction are used, even though the curves were constructed for plywood whose veneers are rotary cut. It is assumed throughout that the plywood is of symmetrical construction with respect to its middle surface.

The choice of axes in the median surface of the cylindrical shell is shown in figure 1, in which the coordinate y is measured along the circumference. The axis $O\xi$ is taken in the direction of the grain of the face plies. The components of the displacements of points in the median surface of the cylindrical shell in the axial, circumferential, and radial directions respectively, are u, v, and w, where w is positive inward. The notation for the components of stress and strain are those of Love's[6] treatise, except that in a few instances it has seemed more convenient to use the symbols t_{xx}, t_{yy}, and t_{xy}, for the components of stress instead of X_x, Y_y, and X_y, respectively. The thickness of the wall of the cylinder, the radius of its median surface, and its length are denoted by h, r, and b, respectively.

Energy Method. Form of the Buckled Surface

A small deflection theory will be used in applying an energy method to determine the buckling stress. The form of the buckled surface will be taken to be

$$\frac{w}{r} = f\,[\sin \alpha(y - \gamma x) + g] \sin \beta x \tag{1}$$

[6] Love, A. E. H., "Treatise on the Mathematical Theory of Elasticity." Cambridge University Press, 1927.

where

$$\alpha = \frac{n}{r}, \ \beta = \frac{\pi}{b},$$

n = number of waves in the circumferential direction.

The form of the first term in the brackets in equation (1) is suggested by the form that has been used to represent the buckled surface of an infinite plane strip[7] under uniform shear. The parameter g is introduced to permit a possible average change of radius of the median surface. Later it will be found to reduce to zero. The factor sin βx is introduced to made the deflection vanish at the ends of the cylindrical shell. Further conditions at the ends are disregarded. Except for very short cylinders, these conditions are not important.

An expression, equivalent to equation (1) with the parameter g omitted, was used by L. H. Donnell[3] to represent the buckled surfaces of cylinders and of flat and curved plates in applying an energy method. In the following discussion, the procedure differs somewhat from that of Donnell in not assuming expressions for the displacements u and v of points of the median surface of the shell. Instead, the components of the induced membrane stresses in the shell are determined from a stress function that satisfies a differential equation expressing the restriction imposed on this function by the form of the assumed buckled surface in equation (1). Further, Donnell found it necessary to introduce an arbitrary additive term in the denominator of his formula for the buckling stress in order to reduce the predicted values of this stress for the torsion problem. It is not clear that this term, chosen arbitrarily, may be expected to be suitable for use with the wide variety of constructions possible in plywood cylinders.

Membrane Stresses and Strains

When buckling begins, both bending and membrane stresses are developed. The strains associated with the membrane stresses will be

---

[7] Timoshenko, S., "Theory of Elastic Stability," page 360; March, H. W., Forest Products Laboratory Report No. 1316.

uniform across the thickness of the cylindrical shell. These strains are expressed in terms of the displacements by the following equations:[8]

$$e_{xx} = \frac{\partial u}{\partial x}, \quad e_{yy} = \frac{\partial v}{\partial y} - \frac{w}{r}, \quad e_{xy} = \frac{\partial u}{\partial y} + \frac{\partial v}{\partial x} \tag{2}$$

By eliminating u and v from equations (2), the following relation is found connecting the components of strain:

$$\frac{\partial^2 e_{xx}}{\partial y} + \frac{\partial^2 e_{yy}}{\partial x} - \frac{\partial^2 e_{xy}}{\partial x \, \partial y} = - \frac{1}{r} \frac{\partial^2 w}{\partial x^2} \tag{3}$$

To obtain the relations between the stress and strain components, axes of reference $O\xi$ and $O\eta$ will be chosen parallel and perpendicular, respectively, to the grain of the face plies. Let θ denote the angle between $O\xi$ and OX, that is, the inclination of the grain of the face plies to the axis of the cylinder. From the equations of transformation of strain components[9], it follows that:

$$\begin{aligned} e_{xx} &= e_{\xi\xi} \cos^2 \theta + e_{\eta\eta} \sin^2 \theta - e_{\xi\eta} \sin \theta \cos \theta \\ e_{yy} &= e_{\xi\xi} \sin^2 \theta + e_{\eta\eta} \cos^2 \theta + e_{\xi\eta} \sin \theta \cos \theta \\ e_{xy} &= 2e_{\xi\xi} \sin \theta \cos \theta - 2e_{\eta\eta} \sin \theta \cos \theta + e_{\xi\eta} (\cos^2\theta - \sin^2\theta) \end{aligned} \tag{4}$$

---

[8]See equations (1), page 7, Forest Products Laboratory Report No. 1322-A. Since the small-deflection theory is to be used, the terms containing the derivatives of the displacement w do not appear. For a discussion of the approximations involved in using these expressions for the strains and expressions to be used subsequently for the changes of curvature and unit twist of the middle surface, see pages 105-108 of the paper by L. H. Donnell, referred to in footnote 4. Also the paper, "The Buckling of Thin Cylindrical Shells under Axial Compression," by Th. von Karman and H. S. Tsien, Jour. Aero. Sciences. 8,303, 1941.

[9]See for example Forest Products Laboratory Report No. 1503.

Denote the "mean moduli in stretching"[10] in directions parallel and perpendicular, respectively, to the grain of the face plies by E_a and E_b, respectively, and the mean stress components referred to the axes $O\xi$ and $O\eta$ by $\bar{t}_{\xi\xi}$, $\bar{t}_{\eta\eta}$, $\bar{t}_{\xi\eta}$. It is readily established that[11]

$$e_{\xi\xi} = \frac{E_b}{H}\,\bar{t}_{\xi\xi} - \frac{E_L\sigma_{TL}}{H}\,\bar{t}_{\eta\eta},$$

$$e_{\eta\eta} = \frac{E_a}{H}\,\bar{t}_{\eta\eta} - \frac{E_L\sigma_{TL}}{H}\,\bar{t}_{\xi\xi}, \qquad (5)$$

$$e_{\xi\eta} = \frac{1}{\mu_{LT}}\,\bar{t}_{\xi\eta},$$

where E_L is Young's modulus in the longitudinal direction,

$$H = \frac{E_a E_b - E_L^2 \sigma_{TL}^2}{\lambda} \qquad (6)$$

$$\lambda = 1 - \sigma_{LT}\,\sigma_{TL}, \qquad (7)$$

σ_{LT} is a Poisson's ratio representing the ratio of the tangential contraction to the longitudinal extension associated with a longitudinal tension, and

μ_{LT} = modulus of rigidity associated with a shearing strain with respect to axes parallel to the longitudinal and tangential directions, respectively. In the definitions just given the subscripts L and T refer to the longitudinal and tangential directions in the wood from which the rotary-cut veneers forming the plywood were cut.

If the veneers are made of wood of different species, the constants in equations (5) can be modified as explained in the latter part of Forest Products Laboratory Report No. 1503.

---

[10] Forest Products Laboratory Report No. 1503, equations (53) and (55), page 19.

[11] Forest Products Laboratory Report No. 1503, equations (56), page 19.

Stress Function

The equations of equilibrium satisfied by the mean stress components $\bar{t}_{\xi\xi}$, $\bar{t}_{\eta\eta}$, $\bar{t}_{\xi\eta}$ imply the existence of a stress function $\underline{F}$ such that

$$\bar{t}_{\xi\xi} = \frac{\partial^2 F}{\partial \eta^2}, \qquad \bar{t}_{\eta\eta} = \frac{\partial^2 F}{\partial \xi^2}, \qquad \bar{t}_{\xi\eta} = -\frac{\partial^2 F}{\partial \xi \partial \eta} \tag{8}$$

After expressing the derivatives appearing in equation (8) in terms of the derivatives $\frac{\partial^2 F}{\partial x^2}$, $\frac{\partial^2 F}{\partial y^2}$, and $\frac{\partial^2 F}{\partial x \partial y}$ with the aid of the transformation

$$\begin{aligned} x &= \xi \cos\theta - \eta \sin\theta \\ y &= \xi \sin\theta + \eta \cos\theta \end{aligned} \tag{9}$$

the results are substituted in equation (5). The results of that substitution are substituted in equation (4), and finally the results of that substitution are inserted in equation (3). The following differential equation for the stress function $\underline{F}$ is obtained:

$$M \frac{\partial^4 F}{\partial x^4} + P \frac{\partial^4 F}{\partial x^3 \partial y} + S \frac{\partial^4 F}{\partial x^2 \partial y^2} + Q \frac{\partial^4 F}{\partial x \partial y^3} + N \frac{\partial^4 F}{\partial y^4} = -\frac{1}{r} \frac{\partial^2 w}{\partial x^2} \tag{10}$$

where

$$\begin{aligned} M &= A \sin^4\theta + B \cos^4\theta + C \sin^2\theta \cos^2\theta, \\ P &= 2\,[(C - 2A) \sin^3\theta \cos\theta - (C - 2B) \sin\theta \cos^3\theta], \\ S &= (6A + 6B - 4C) \sin^2\theta \cos^2\theta + C\,(\sin^4\theta + \cos^4\theta) \\ Q &= 2\,[(C - 2A) \sin\theta \cos^3\theta - (C - 2B) \sin^3\theta \cos\theta] \\ N &= A \cos^4\theta + B \sin^4\theta + C \sin^2\theta \cos^2\theta \\ A &= \frac{E_b}{H}, \quad B = \frac{E_a}{H}, \quad C = \frac{1}{\mu_{LT}} - \frac{2E_L \sigma_{TL}}{H}. \end{aligned} \tag{11}$$

Stress and Strain Components Referred to the Axes OX and OY

The assumed form of the buckled surface is given by equation (1). It is convenient to rewrite this equation as

$$\frac{w}{r} = \frac{f}{2}\left[\cos(\alpha y - \delta x) - \cos(\alpha y - \epsilon x)\right] + g\, f \sin \beta x \tag{12}$$

where

$$\delta = \alpha\gamma + \beta \tag{13}$$

$$\epsilon = \alpha\gamma - \beta$$

The following equation is obtained by substituting equation (12) in equation (10):

$$M \frac{\partial^4 F}{\partial x^4} + P \frac{\partial^4 F}{\partial x^3 \partial y} + S \frac{\partial^4 F}{\partial x^2 \partial y^2} + Q \frac{\partial^4 F}{\partial x \partial y^3} + N \frac{\partial^4 F}{\partial y^4}$$

$$= \frac{f}{2}\left[\delta^2 \cos(\alpha y - \delta x) - \epsilon^2 \cos(\alpha y - \epsilon x)\right] + g\, f\, \beta^2 \sin \beta x \tag{14}$$

A solution of equation (14) is

$$F = a_1 \cos(\alpha y - \delta x) + a_2 \cos(\alpha y - \epsilon x) + a_3 \sin \beta x \tag{15}$$

where

$$a_1 = \frac{f\delta^2}{2(M\delta^4 - P\alpha\delta^3 + S\alpha^2\delta^2 - Q\alpha^3\delta + N\alpha^4)}$$

$$a_2 = -\frac{f\epsilon^2}{2(M\epsilon^4 - P\alpha\epsilon^3 + S\alpha^2\epsilon^2 - Q\alpha^3\epsilon + N\alpha^4)} \tag{16}$$

$$a_3 = \frac{g\, f}{M\beta^2}$$

The following expressions for the mean stress components referred to the axes OX and OY are obtained from equation (15):

$$X_x = \frac{\partial^2 F}{\partial y^2} = - a_1\alpha^2 \cos(\alpha y - \delta x) - a_2\alpha^2 \cos(\alpha y - \epsilon x),$$

$$Y_y = \frac{\partial^2 F}{\partial x^2} = - a_1\delta^2 \cos(\alpha y - \delta x) - a_2\epsilon^2 \cos(\alpha y - \epsilon x) - a_3\beta^2 \sin\beta x, \tag{17}$$

$$X_y = - \frac{\partial^2 F}{\partial x \partial y} = - a_1\alpha\delta \cos(\alpha y - \delta x) - a_2\alpha\epsilon \cos(\alpha y - \epsilon x)$$

Next the equations connecting the strain components e_{xx}, ... and the stress components X_x, ... will be obtained by expressing the strain components of equations (5) in terms of the mean stress components X_x, ... by means of transformation (9), and substituting the resulting expressions in equations (4). For any direction of the grain of the face plies, the connecting equations are:

$$e_{xx} = c_{11} X_x + c_{12} Y_y + c_{13} X_y$$

$$e_{yy} = c_{12} X_x + c_{22} Y_y + c_{23} X_y \tag{18}$$

$$e_{xy} = c_{13} X_x + c_{23} Y_y + c_{33} X_y$$

where

$$c_{11} = C \sin^2\theta \cos^2\theta + A \cos^4\theta + B \sin^4\theta$$

$$c_{12} = (A + B - \frac{1}{\mu LT}) \sin^2\theta \cos^2\theta - \frac{E_L\sigma_{TL}}{H} (\sin^4\theta + \cos^4\theta)$$

$$c_{13} = (C - 2B) \sin^3\theta \cos\theta + (2A - C) \sin\theta \cos^3\theta$$

$$c_{22} = C \sin^2\theta \cos^2\theta + A \sin^4\theta + B \cos^4\theta \tag{19}$$

$$c_{23} = (2A - C) \sin^3\theta \cos\theta + (C - 2B) \sin\theta \cos^3\theta$$

$$c_{33} = 4 (A + B - C) \sin^2\theta \cos^2\theta + \frac{1}{\mu LT}$$

Strain Energy of the Shell

The strain energy associated with the membrane stresses in the shell is given by

$$w_1 = \frac{h}{2} \int_0^b \int_0^{2\pi r} \Big\{ c_{11} X_x^2 + c_{22} Y_y^2 + c_{33} X_y^2 + 2c_{12} X_x Y_y + 2c_{13} X_x X_y + 2c_{23} X_y Y_y \Big\} dy\, dx \tag{20}$$

where the coefficients c_{11}, ... are given in equations (19), and h is the thickness of the shell. On substituting equations (17) in equation (20) and performing the integration, it is found that

$$\begin{aligned} W_1 = \frac{h\, b\, 2\pi r}{4} \Big\{ & c_{11} [a_1^2 \alpha^4 + a_2 \alpha^4] + c_{22} [a_1^2 \delta^4 + a_2^2 \epsilon^4 + a_3^2 \beta^4] \\ & + c_{33} [a_1^2 \alpha^2 \delta^2 + a_2^2 \alpha^2 \epsilon^2] + 2c_{12} [a_1^2 \alpha^2 \delta^2 + a_2^2 \alpha^2 \epsilon^2] \\ & + 2c_{13} [a_1^2 \alpha^3 \delta + a_2^2 \alpha^3 \epsilon] + 2c_{23} [a_1^2 \alpha \delta^3 + a_2^2 \alpha \epsilon^3] \Big\} \end{aligned} \tag{21}$$

The strain energy of bending of the shell is given by

$$\begin{aligned} W_2 = \frac{h^3}{24} \int_S \int \Big[& E_1 \left(\frac{\partial^2 w}{\partial \xi^2}\right)^2 + E_2 \left(\frac{\partial^2 w}{\partial \eta^2}\right)^2 + 2E_L \sigma_{TL} \left(\frac{\partial^2 w}{\partial \xi^2}\right)\left(\frac{\partial^2 w}{\partial \eta^2}\right) \\ & + 4\lambda\, \mu_{LT} \left(\frac{\partial^2 w}{\partial \xi \partial \eta}\right)^2 \Big] d\xi d\eta, \end{aligned} \tag{22}$$

where E_1 and E_2 are proportional to the flexural rigidities of the plywood in the wall of the shell in the ξ- and η-directions, respectively. The flexural rigidities in these two directions are $E_1 I$ and $E_2 I$, respectively, where I is the moment of inertia of the entire cross section of unit width of the plywood with respect to its central line. The integration is to be extended over the entire middle surface of the shell. Transforming the expression for the strain energy of bending by means of equation (9), it is found that

$$W_2 = \frac{h^3}{24\lambda}\int_0^b \int_0^{2\pi r} \left\{ b_1 \left(\frac{\partial^2 w}{\partial x^2}\right)^2 + b_2 \left(\frac{\partial^2 w}{\partial y^2}\right)^2 + b_3 \left(\frac{\partial^2 w}{\partial x \partial y}\right)^2 \right.$$

$$\left. + b_4 \frac{\partial^2 w}{\partial x^2}\frac{\partial^2 w}{\partial x \partial y} + b_5 \frac{\partial^2 w}{\partial x^2}\frac{\partial^2 w}{\partial y^2} + b_6 \frac{\partial^2 w}{\partial y^2}\frac{\partial^2 w}{\partial x \partial y} \right\} dydx \tag{23}$$

where

$$b_1 = E_1 \cos^4\theta + E_2 \sin^4\theta + 2E_L\,\sigma_{TL}\sin^2\theta\cos^2\theta + 4\lambda\,\mu_{LT}\sin^2\theta\cos^2\theta$$

$$b_2 = E_1 \sin^4\theta + E_2 \cos^4\theta + 2E_L\,\sigma_{TL}\sin^2\theta\cos^2\theta + 4\lambda\,\mu_{LT}\sin^2\theta\cos^2\theta \tag{24}$$

$$b_3 = 4E_1 \sin^2\theta\cos^2\theta + 4E_2 \sin^2\theta\cos^2\theta - 8E_L\,\sigma_{TL}\sin^2\theta\cos^2\theta$$

$$+ 4\lambda\,\mu_{LT}(\cos^2\theta - \sin^2\theta)^2$$

$$b_4 = 4E_1 \sin\theta\cos^3\theta - 4E_2 \sin^3\theta\cos\theta - 4E_L\,\sigma_{TL}(\cos^2\theta - \sin^2\theta)\sin\theta\cos\theta$$

$$- 8\lambda\,\mu_{LT}(\cos^2\theta - \sin^2\theta)\sin\theta\cos\theta$$

$$b_5 = 2E_1 \sin^2\theta\cos^2\theta + 2E_2 \sin^2\theta\cos^2\theta + 2E_L\,\sigma_{TL}(\sin^4\theta + \cos^4\theta)$$

$$- 8\lambda\,\mu_{LT}\sin^2\theta\cos^2\theta$$

$$b_6 = 4E_1 \sin^3\theta\cos\theta - 4E_2 \sin\theta\cos^3\theta + 4E_L\,\sigma_{TL}(\cos^2\theta - \sin^2\theta) \times$$

$$\sin\theta\cos\theta + 8\lambda\,\mu_{LT}(\cos^2\theta - \sin^2\theta)\sin\theta\cos\theta$$

By substituting the derivatives obtained from equation (12) in equation (23) and integrating, it is found that

$$W_2 = \frac{f^2 r^2 h^3 b\, 2\pi r}{192\lambda}\left\{ b_1 [\delta^4 + \epsilon^4 + 4 g^2\beta^4] + 2 b_2\alpha^4 \right.$$

$$+ (b_3 + b_5)[\alpha^2\delta^2 + \alpha^2\epsilon^2] - b_4 [\alpha\delta^3 + \alpha\epsilon^3] \tag{25}$$

$$\left. - b_6 [\alpha^3\delta + \alpha^3\epsilon] \right\}$$

Work Done by Applied Load

The work done by the applied load during buckling is given by

$$W_3 = -\tau h \int_0^b \int_0^{2\pi r} \frac{\partial w}{\partial x} \frac{\partial w}{\partial y} \, dydx, \tag{26}$$

where τ is the uniform shearing stress induced in the cylindrical shell by the couples applied at its ends. On substituting from equation (12), equation (26) after performing the integration becomes:

$$W_3 = \frac{\tau h \, b\pi r^3 f^2 \alpha^2 \gamma}{2} \tag{27}$$

Critical Value of τ

The critical value of τ is found from the equation

$$W_3 = W_1 + W_2 \tag{28}$$

Where W_1, W_2, and W_3 are given by equations (21), (25), and (27), respectively. On substituting these values of W_1, W_2, and W_3 in equation (28) and using equations (16), the following expressions for τ as a function of the parameters α, β, γ, and g is found:

$$\tau = \frac{1}{4r^2\alpha^2\gamma} \times$$

$$\left\{ \frac{\delta^4[c_{11}\alpha^4 + c_{22}\delta^4 + c_{33}\alpha^2\delta^2 + 2c_{12}\alpha^2\delta^2 + 2c_{13}\alpha^3\delta + 2c_{23}\alpha\delta^3]}{[M\delta^4 - P\alpha\delta^3 + S\alpha^2\delta^2 - Q\alpha^3\delta + N\alpha^4]^2} \right.$$

$$+ \frac{\epsilon^4 [c_{11}\alpha^4 + c_{22}\epsilon^4 + c_{33}\alpha^2\epsilon^2 + 2c_{12}\alpha^2\epsilon^2 + 2c_{13}\alpha^3\epsilon + 2c_{23}\alpha\epsilon^3]}{[M\epsilon^4 - P\alpha\epsilon^3 + S\alpha^2\epsilon^2 - Q\alpha^3\epsilon + N\alpha^4]^2} \tag{29}$$

$$+ \frac{4\, g^2\, c_{22}}{M^2}\Big\} + \frac{h^2}{48\lambda a^2 \gamma} \Big\{ b_1\, [\delta^4 + \epsilon^4 + 4\, g^2\, \beta^4] + 2b_2\, \alpha^4$$

$$+ (b_3 + b_5)\, [\alpha^2\delta^2 + \alpha^2\epsilon^2] - b_4\, [\alpha\delta^3 + \alpha\epsilon^3] - b_6\, [\alpha^3\delta + \alpha^3\epsilon] \Big\}.$$

The critical value of τ is given by the minimum value of the right-hand member of equation (29). It is evident from the way in which the variable g enters into equation (29) that this minimum value occurs when $g = 0$, that is, $\frac{\delta\tau}{\delta g} = 0$ only when $g = 0$.

In order to facilitate finding the minimum value of equation (29), the following notation will be introduced. Let

$$\rho = \frac{\beta}{\alpha}, \quad k = \frac{r\tau}{E_L h}, \quad J = \frac{b^2}{rh} \tag{30}$$

Then equation (29) can be written in the form:

$$k = J\, f_1\, (\rho,\gamma) + \frac{1}{J}\, f_2\, (\rho,\gamma), \tag{31}$$

where

$$f_1 = \frac{\rho^2}{4\pi^2 E_L \gamma} \times$$

$$\Bigg\{ \frac{(\gamma+\rho)^4\, [c_{11}+2c_{13}(\gamma+\rho)+(c_{33}+2c_{12})(\gamma+\rho)^2 + 2c_{23}(\gamma+\rho)^3 + c_{22}(\gamma+\rho)^4]}{[M(\gamma+\rho)^4 - P(\gamma+\rho)^3 + S(\gamma+\rho)^2 - Q(\gamma+\rho) + N]^2}$$

$$+ \frac{(\gamma-\rho)^4\, [c_{11}+2c_{13}(\gamma-\rho) + (c_{33}+2c_{12})(\gamma-\rho)^2 + 2c_{23}(\gamma-\rho)^3 + c_{22}(\gamma-\rho)^4]}{[M(\gamma-\rho)^4 - P(\gamma-\rho)^3 + S(\gamma-\rho)^2 - Q(\gamma-\rho) + N]^2} \Bigg\} \tag{32}$$

$$f_2 = \frac{\pi^2}{48\lambda E_L \gamma \rho^2} \left\{ b_1 \left[(\gamma + \rho)^4 + (\gamma - \rho)^4\right] + 2b_2 + (b_3 + b_5) \times \right.$$

$$\left. \left[(\gamma + \rho)^2 + (\gamma - \rho)^2\right] - b_4 \left[(\gamma + \rho)^3 + (\gamma - \rho)^3\right] - 2b_6\gamma \right\} .$$

The right side of equation (31) has been expressed in terms of the three quantities J, f_1, and f_2 by the notation introduced in equations (30) and (32). The expression represented by J depends on the dimensions of the plywood cylinder, while each of the expressions represented by f_1 and f_2 depends on the construction and elastic constants of the plywood, and the two parameters γ and ρ. Hence for a given cylinder, k, which is proportional to τ, can be expressed as a function of γ and ρ by means of equation (31). The problem is to find the minimum value of k. It is convenient to do this graphically by first assigning a value γ_1 to γ and then determining a minimum value of k, say k_1, by plotting k as a function of ρ. A second value γ_2 of γ is assigned and a corresponding minimal k_2 is found by the same method. The process is repeated until a pair of values γ_i, k_i is found (fig. 2) such that any change in the value γ_i assigned γ leads to a larger value of k than k_i. This value k_i of $k_{theoretical}$ is the minimum value of the right-hand member of equation (31), and from it the theoretical buckling stress may be obtained (equation (30)). The choice of γ_1, γ_2,-----is guided by the fact that the arctan γ, the angle of inclination of the wrinkles to the axis of the cylinder, lies between 10° and 30° for most of the plywood cylinders considered here.

Theoretical Curves

The elastic moduli used for Douglas-fir plywood are given in table 1. The values of $k_{theoretical}$ were computed by the method given in the previous section for several values of J for each of several constructions of Douglas-fir plywood (table 2). The angles of inclination of face grain to the axis of the cylinder considered are 0°, 90°, and 45°. For the constructions considered and for a given angle of face grain and value of J, the values of $k_{theoretical}$ can be represented satisfactorily by a smooth curve when plotted as a function of the ratio $\frac{E_1}{E_1 + E_2}$.

Constructions that have values of E_a and E_b that depart markedly from those of the constructions given will have values of $k_{theoretical}$ different from those given by the theoretical curves, but this difference will be small for all practical constructions. This difference is due to the fact that $k_{theoretical}$ is a function of E_a and E_b as well as

E_1 and E_2 for a given shear modulus and construction. The constructions used in the computations are chosen to give values of $\frac{E_1}{E_1 + E_2}$ that are approximately evenly spaced over the interval from 1/2 to 1 in which the usual constructions will lie. A series of the curves for $k_{theoretical}$ are given in figure 3 where all curves in each group are drawn for the same angle of face grain.

For plywood made of other species than Douglas-fir, the ratio of μ_{LT} to E_L is likely to be different, and additional curves for $k_{theoretical}$ are given in figures 4 and 5 for two different shear moduli combined with the other elastic moduli of Douglas-fir in table 1. The various shear moduli used are 80,000, 123,800, and 200,000 pounds per square inch, which give ratios of μ_{LT} to E_L of approximately 0.036, 0.056, and 0.090, respectively. The curves (figs. 4 and 5) show that it is necessary to consider a variation of the ratio of μ_{LT} to E_L, since for some cases a change of from 0.036 to 0.090 in this ratio for the same construction, angle of face grain, and value of J gives a difference of 45 percent in the value of $k_{theoretical}$.

Use of the Theoretical Curves for Plywood Cylinders

The procedure for finding the theoretical buckling stress for a given cylinder follows. Compute E_1 and E_2, the effective moduli of elasticity of the plywood in bending, by means of the equations

$$E = \frac{1}{I} \sum_{i=1}^{i=n} (E_\xi)_i \, I_i, \qquad E = \frac{1}{I} \sum_{i=1}^{i=n} (E_\eta)_i \, I_i$$

where n is the number of plies, $E\xi$ and $E\eta$ are Young's moduli in each ply in the ξ- and η-directions, respectively (fig. 1), I is the moment of inertia about the centerline of the total cross section perpendicular to the direction considered, and I_i is the moment of inertia of the ith ply about the centerline of the same total cross section. Compute next the ratio $\frac{E_1}{E_1 + E_2}$ and the parameter $J = \frac{b^2}{rh}$ where r, b, and h are the radius, length, and thickness, respectively of the plywood cylinder. In figures 3, 4, and 5 find the group of curves drawn for the desired angle of face grain and for the ratio $\frac{\mu_{LT}}{E_L}$ nearest that of the given cylinder. The modulus E_L is Young's modulus measured parallel to the grain of the

wood from which the plywood is cut, and the modulus μ_{LT} is the modulus of rigidity associated with a shearing strain with respect to axes parallel to the ξ- and η-directions, respectively. For many plywood cylinders, the ratio $\frac{\mu_{LT}}{E_L}$ will be approximately 0.056. Then after locating the point representing the computed value of $\frac{E_1}{E_1 + E_2}$ on the horizontal scale, the value of $k_{theoretical}$ corresponding to the given J can be found by interpolation between the ordinates of the curves drawn for various values of J. Then the minimum value of τ, τ_{cr}, obtained from equation (33), is

$$\tau_{cr} = k \frac{E_L h}{r}$$

For the same construction, angle of face grain, and value of J, the values of k show approximately a linear variation with the ratio $\frac{\mu_{LT}}{E_L}$. The truth of this statement can be shown by taking values of k from the curves. Hence if μ_{LT} and E_L are known and if the ratio $\frac{\mu_{LT}}{E_L}$ differs from the ones used in figures 3, 4, or 5, the values of k can be found by interpolation.

Experimental Analysis

Description of Specimens

Specimens were made of yellow birch or yellow-poplar plywood. All veneer was of aircraft grade, rotary cut at the Forest Products Laboratory. All plywood was made flat, using a phenolic resin film glue set in a hot press. The cylinders were formed by bending the flat plywood around a hot mandrel (fig. 6). Prior to forming, the plywood was scarfed, then moistened to facilitate bending, and finally bent around the mandrel upon which the scarf joint was glued with a thermosetting synthetic resin glue. Cylinders were made of two diameters, 10-1/2 inches and 3 inches. Cylinders of 3-inch diameter were tested to investigate the range in which the buckling stresses approach the shear strengths of the plywood. Most of the specimens had a diameter of 10-1/2 inches. Specimens of the larger diameter had 3/4-inch snugly fitting plywood plates glued in each end. The specimens, 3 inches in diameter, were fitted with birch end plugs, which were glued to a depth of 4 inches. This was necessary to provide sufficient glue area and, therefore, sufficient strength in the joint to force the failure into the plywood shell rather than to allow a glue joint failure.

The plywood of the cylinders was of several constructions, as listed in table 3. The four-ply construction was made of 1/100-inch veneers with the grain direction of the two inner plies parallel to each other and perpendicular to that of the face plies. All other plywood was manufactured with the grain directions of adjacent plies at right angles.

The grain of the face plies of the cylinders was oriented in four different directions: Face grain parallel to the axis of the cylinder ($\theta = 0°$), face grain circumferential ($\theta = 90°$), face grain oriented at 45° to the axis so that the face plies were placed in tension parallel to the grain ($\theta = +45°$), and face grain oriented at 45° to the axis so that the face plies were placed in compression parallel to the grain ($\theta = -45°$).

Three or five specimens were made for each type of plywood, diameter, length, and face grain direction as listed in table 3. The veneers in each group of specimens were matched as closely as possible by cutting them from adjacent portions of the log. In order to obtain the mechanical properties of material similar to that of the cylinders, flat sheets of matched plywood were prepared. These sheets provided specimens for testing in bending, compression, and tension.

No attempt was made to condition the specimens to a particular moisture content other than to allow them to remain in the testing laboratory for about a week before testing. All specimens of a group were tested the same day.

Testing Methods

The apparatus used to test the cylinders is shown in figures 7 and 8.

The cylinders that were 10-1/2 inches in diameter were tested in the apparatus shown in figure 7. The end plates of the cylinders were fastened to the loading arms and the end bracket by means of pins. The load was applied by means of the movable head of a testing machine and was measured on the scale placed between the loading arms and testing machine.

The cylinders that were 3 inches in diameter were tested in the apparatus shown in figure 8. The end plugs were clamped in the jaws of the torsion testing machine and the load measured on the scale. The loads were applied slowly and at a uniform rate until failure occurred.

In some instances, a troptometer was used to measure shear deformations for computations of the modulus of rigidity μ_{LT}. The troptometer was of the wire-wound, differential-dial type. The wires were wound one turn around the specimen and then weighted, causing enough friction so that the wires would not slip, but would follow the twist of the

specimen without injuring it in any manner. When the shear modulus was not determined for a particular cylinder, an average value of $\frac{\mu_{LT}}{E_L}$, taken from tests of other cylinders of the same species, was used in determining the constant k.

Minor specimens were tested in bending, compression, and tension to determine the mechanical properties of the material. The testing procedures followed for these coupons are described in the appendix.

Test Results

The manner of failure of the cylinders was either by (1) formation of an elastic buckle, (2) buckling followed immediately by breaking, or (3) shearing of the plywood. Column 13 of table 3 describes the type of failure for each specimen.

Failure due to the forming of an elastic buckle was usually sudden. As soon as the buckle appeared, the torque immediately dropped to a low value. In some instances progressive buckling occurred, that is, one buckle would appear, then another, and so on. In general, the initial buckle was long and narrow, with its long axis at an angle to the axis of the cylinder. Some measurements of this angle showed that theoretical and experimental values agreed fairly well. If deformation was continued after formation of the initial buckle, several smaller buckles occasionally appeared inside the large initial buckle. As was true for buckles formed in thin-walled cylinders in compression, the torsion buckles also deflected inward from the original surface except at the edge of the buckle.

Buckling, followed immediately by breaking, occurred in the thicker and shorter specimens. The buckle formed, and then the plywood broke with a loud report. The breaking was caused by the high bending stresses that were induced in the plywood due to the sharp radius of curvature of the buckle.

Shearing of the plywood occurred in the short specimens of smaller diameter. This type of failure was instantaneous and explosive. A failed specimen is shown in figure 8.

Computation of Results

The computations of test results consisted of calculating the shearing stress at buckling from the applied torque. From this stress the value of the constant k_{test} was computed. The experimentally determined

values of $\underline{k}$ were compared with the theoretical values. Both sets of values are presented in table 3 and are plotted in figures 9 to 13. The computations were carried out as follows:

The shearing stress at failure (column 15, table 3) was computed by means of the formula

$$\tau = \frac{T}{2\pi r^2 h}$$

where

τ = shearing stress

T = torque at failure

r = mean radius of the plywood cylinder

h = plywood thickness

The experimental buckling constant (k) (column 17, table 3) was computed from the formula

$$k = \frac{\tau r}{E_L h}$$

where $\underline{E_L}$ is the modulus of elasticity of the veneers of the plywood measured parallel to the grain. Average values of $\underline{E_L}$ (column 16, table 3) were determined from test data of minor coupons from the formula

$$E_L = \frac{E_1 + E_2}{C} = \frac{E_a + E_b}{C}$$

where

C = a constant depending on the species of veneer. For yellow birch $C = 1.045$, and for yellow-poplar $C = 1.037$. (See Forest Products Laboratory Report 1304 "Methods of Computing the Strength and Stiffness of Plywood Strips in Bending")

E_1 = bending modulus of elasticity of the plywood with the face grain parallel to the span (table 4).

E_2 = bending modulus of elasticity of the plywood with the face grain perpendicular to the span (table 4).

E_a = compressive or tensile modulus of elasticity of the plywood measured parallel to the face grain (table 4).

E_b = compressive or tensile modulus of elasticity of the plywood measured perpendicular to the face grain (table 4).

In order to compare the experimental values with the theoretical values, it is necessary to compute theoretical values of the buckling constant ($k_{theoretical}$). Values of

$J = \frac{b^2}{rh}$ (column 14, table 3) were computed from test measurements,

where

b = length of the cylinder (column 11, table 3)

r = mean radius of curvature (computed from outside diameter in column 9 table 3)

h = plywood thickness (column 10, table 3)

Values of $\frac{E_1}{E_1 + E_2}$ (column 19, table 3) were computed from the formula

$\frac{E_1}{E_1 + E_2} = \frac{K_1}{K_1 + K_2}$, where K_1 and K_2 are given by the following formula

$$K_1 \text{ or } K_2 = \frac{\sum_{i=1}^{i=n} \frac{E_i}{E_L} I_i}{I}$$

where

I = moment of inertia of the entire cross section of unit width about its centerline ($I = \frac{h^3}{12}$)

I_i = moment of inertia of the ith ply of unit width about the neutral axis of the cross section.

E_i = modulus of elasticity of the ith ply, measured parallel to the span. For plies having the face grain parallel to the span $E_i = E_L$; for plies having face grain perpendicular $E_i = 0.045E_L$ for yellow birch, and $E_i = 0.037E_L$ for yellow-poplar.

Using appropriate values of $\frac{E_1}{E_1 + E_2}$ and J, the curves of figures 3, 4, and 5 were entered and values of $k_{theoretical}$ were determined for the ratio $\frac{\mu_{LT}}{E_L}$ equal to 0.056, 0.036, and 0.090, respectively. Values of $k_{theoretical}$ for test values of $\frac{\mu_{LT}}{E_L}$ (column 20, table 3) were then determined by interpolation.

The shearing strengths of the yellow birch plywood, with faces of 1/100-inch veneer with the grain direction axial, and with cores of two 1/100-inch veneers with the grain direction circumferential ($\theta = 0°$ or $\theta = 90°$), were determined by torsion tests on 3-inch diameter cylinders of short lengths, so that no buckling would occur. The shear strength for yellow birch plywood of the same construction, but having the face grain of the cylinder at ±45°, was calculated from the formula

$$f_s = \frac{f_c}{\sqrt{1 + \left(\frac{f_c}{f_t}\right)^2}}$$

where

f_c = compressive strength of the plywood

f_t = tensile strength of the plywood

Values of the compressive or tensile strength were obtained from tests on minor coupons.

The theoretical buckling stress ($\tau_{theoretical}$) was computed from the formula

$$\tau_{theoretical} = \frac{k_{theoretical}}{k_{test}} \times \tau_{test}$$

Discussion of Results

A comparison of theoretical buckling constants with experimental constants is shown in figure 9 where $k_{theoretical}$ is plotted against k_{test}. The line drawn on the graph represents the relation $k_{theoretical} = k_{test}$ and does not represent the average of the points plotted. Each point represents the test results of one cylinder of 10-1/2-inch diameter. Much of the scatter of these points is attributed to the fact that

small initial imperfections not taken into account by the theory may cause premature buckling, and to variations in the dimensions of the specimen, and in the mechanical properties of the plywood. Measurements taken on several similar specimens showed that the thickness of the plywood may vary as much as 7 percent on a single cylinder.

Figures 10 to 13 show values of k_{test} plotted against values of $k_{theoretical}$ for cylinders 10-1/2 inches in diameter of each different plywood construction.

The agreement of test and theoretical values of the buckling constant, as shown in figures 9 to 13, is regarded as satisfactory, considering the many possible causes that can contribute to the variation of the experimental values.

In the theory it was assumed that the ends of the cylinders were simply supported, while in test they were glued to circular plates inserted at each end. The effect of the resultant restraint should manifest itself in an increase in the value of the constant k with decreasing length for a series of cylinders of the same radius, thickness, and type of plywood. In the different series of tests shown in table 3 of the cylinders 10-1/2 inches in diameter and of lengths ranging from 38.5 to 8.5 inches, such an increase was not evident. In these series, the plates glued in at the ends were 3/4 inch thick.

In order to obtain information regarding the influence of the shear strength on the buckling stress of the plywood cylinders, tests were made on specimens of three-ply plywood 3 inches in diameter. The face plies were one-half as thick as cores, and the lengths varied from 5 inches to 1/8 inch. The shorter specimens failed in shear without buckling. Ratios of theoretical and experimental buckling stresses to shearing strengths ($\frac{\tau_{theoretical}}{f_s}$ and $\frac{\tau_{test}}{f_s}$) are plotted in figure 14. It was expected that the points would fall along the straight line until the buckling stress was about 60 percent of the shearing strength, that beyond this point the theoretical ratio would exceed the experimental, and that a design curve could be drawn as it was for cylinders in compression (Forest Products Laboratory Report No. 1322). Although the data are widely scattered, an approximate design curve of this character can be drawn. Buckling constants determined from specimens 3 inches in diameter showed no definite trend due to the more rigid end restraint provided by the long loading plugs and to the change in lengths of the specimens. This expected increase was not observed and was probably obscured by the approach of the shear stresses to the shear strength for the plywood.

In connection with design, it should be noted that many of the cylinders broke immediately after buckling occurred at relatively low shearing stresses. This was due to the high bending stresses induced by the sharp curvature of the buckle.

The theory presented in this report was used to compute buckling constants for thin cylinders of brass and steel reported in NACA Report No. 479, "Stability of Thin-Walled Tubes Under Torsion" by L. H. Donnell. Values of the test buckling constant versus the theoretical buckling constant, as computed by the method presented herein, are plotted in figure 15. The test values are all lower than the theoretical. In NACA Report No. 479, it was found that all observed buckling stresses were greater than 60 percent of the theoretical buckling stresses calculated by the theory of that report. By drawing the line $k_{test} = 0.60\ k_{theoretical}$ in figure 15, it can be seen that this statement is also true for the buckling stresses calculated by the approximate theory of the present report. As previously indicated, the theory assumes no initial imperfections of shape in the cylinders under consideration. Since the metal used in the tests of Report No. 479 was thin, the magnitude of the departures from true cylindrical form, as compared with the thickness of the wall of the cylinder, were probably much larger than those of the plywood cylinders and consequently lower test values of the torsion buckling constant would be expected.

Conclusions

The buckling stresses of thin plywood cylinders can be computed by the approximate formula

$$\tau = k\, E_L \frac{h}{r}$$

where k is taken from the curves presented in this report. Approximate failing stresses for cylinders in which the buckling stresses are influenced by the shear strength of the plywood can be determined by use of figure 14 in connection with the theory. The data scatter considerably, but average values obtained from test agree well with the theory.

Plywood for which the ratio $\frac{E_1}{E_1 + E_2}$ is less than 0.9 can be used effectively in thin-walled cylinders in torsion. For ratios larger than 0.9, the steepness of the curves (figs. 3 to 5) shows that caution should be exercised in their use.

The theoretical analysis may be used for any angle of inclination of the face grain of the cylinder (equation 31). The angles of face grain for which curves are given in this report were selected as representatives.

APPENDIX

Tests of Minor Specimens

Flat plates of plywood that matched the material of the cylinders furnished specimens for minor tests in bending, tension, and compression. Results of tests are presented in table 4.

Bending specimens were 1 inch wide and were tested on a span length 48 or more times the thickness of the specimen for face grain direction parallel to the span and 24 or more times for face grain direction perpendicular to the span, thus eliminating the necessity of correcting for shear deformation. Specimens were cut so that the face grain direction was parallel to the span, or perpendicular to the span. Specimens rested on end supports rounded to about 1/16-inch radius. The load was applied at the center with a bar of about 1/8-inch radius. The stiffer specimens were tested on an apparatus that measured the load by means of a platform scale reading to 1/100 pound. The rate of loading and driving force were obtained from a testing machine on which the scale was mounted (fig. 16). Specimens not stiff enough to test on the platform scale apparatus were tested on an apparatus that used water as a load. The load increments could be read to 10 grams and the rate of loading was controlled by the size of nozzle (fig. 17). Immediately after testing, a sample was cut from the specimen for moisture content determination. The specific gravity was obtained from measurements and weights taken before testing and subsequently corrected for moisture content. During the test, load-deflection curves were plotted. Properties computed from the test data were the modulus of elasticity, the moisture content, and the specific gravity.

The tension specimens were 1 inch wide and 11 inches long, with face grain directions parallel and perpendicular to the direction of the load. The ends of the specimens were gripped in Templin grips fastened to the testing machine by bolts passed through spherical bearings. The strain over a 2-inch gage length was measured at the center of the specimen with an extensometer reading to 0.0001 of an inch (fig. 18). The rate of loading was 0.05 inch per minute. During the test, load-deformation curves were plotted. Properties computed from the test data were the modulus of elasticity, the tensile strength, the moisture content, and the specific gravity. Moisture content and specific gravity were determined in the same manner as they were for the bending specimens.

The compression specimens were 1 inch wide and 4 inches long, with face grain directions parallel or perpendicular to the direction of the load. Because of the thinness of the specimen, an apparatus consisting of thin spring fingers was used to give lateral support (fig. 19). The strain was measured over a 2-inch gage length with a Martens' mirror apparatus. Load-deformation curves were plotted as the tests were run.

Properties computed from the test data were the modulus of elasticity, the compressive stress at the proportional-limit load, the compressive strength, the moisture content, and the specific gravity. The moisture content and specific gravity were determined in the same manner as they were for the bending specimens.

Table 1.--Elastic moduli of Douglas-fir[1] used in the calculations

E_L	= 2,223,000 pounds per square inch
E_T	= 125,000 pounds per square inch
μ_{LT}	= 123,800 pounds per square inch
σ_{LT}	= 0.434

[1]These are tentative values of the constants for material at 12 percent moisture content with the exception of the modulus of rigidity, μ_{LT}. The value used for this constant was taken from the results of a limited number of tests at 10 percent moisture content.

Table 2.—Theoretical buckling constants for thin-walled plywood cylinders in torsion

θ	$\frac{\mu_{LT}}{E_L}$	$\frac{E_1}{E_1 + E_2}$	$k_{theoretical}$ for certain values of J							Plywood construction
			J = 250	J = 500	J = 750	J = 1,000	J = 2,000	J = 6,000	J = 10,000	
Degrees										
90	0.036	0.500	0.0488	0.0438	0.0416	0.0402	0.0373	0.0327	0.0305	∞-ply
90	.036	.584	.0515	.0467	.0446	.0432	.0403	.0356	.0332	Five-ply (1:2:2:2:1)
90	.036	.689	.0541	.0496	.0475	.0462	.0431	.0380	.0354	Seven-ply (1:1:1:1:1:1:1)
90	.036	.835	.0574	.0539	.0522	.0510	.0482	.0432	.0406	Three-ply (1:2:1)
90	.036	.914	.0580	.0547	.0529	.0516	.0485	.0427	.0397	Three-ply (1:1:1)
90	.036	.926	.0578	.0545	.0526	.0513	.0480	.0419	.0388	Three-ply (1:0.8:1)
90	.036	.936	.0574	.0540	.0520	.0506	.0470	.0407	.0375	Three-ply (1:0.6:1)
90	.036	.943	.0566	.0529	.0507	.0492	.0453	.0386	.0354	Three-ply (1:0.4:1)
90	.036	.947	.0487	.0433	.0404	.0383	.0335	.0266	.0238	One-ply
0	.036	.500	.0488	.0434	.0416	.0402	.0373	.0327	.0305	∞-ply
0	.036	.584	.0457	.0405	.0383	.0369	.0340	.0296	.0275	Five-ply (1:2:2:2:1)
0	.036	.689	.0413	.0360	.0338	.0325	.0297	.0258	.0240	Seven-ply (1:1:1:1:1:1:1)
0	.036	.835	.0323	.0272	.0251	.0238	.0212	.0178	.0163	Three-ply (1:2:1)
0	.036	.914	.0257	.0211	.0192	.0181	.0159	.0132	.0121	Three-ply (1:1:1)
0	.036	.947	.0214	.0174	.0159	.0149	.0132	.0110	.0101	One-ply
+45	.036	.500	.0687	.0514	.0439	.0394	.0308	.0215	.0184	∞-ply
+45	.036	.584	.0627	.0473	.0406	.0365	.0287	.0203	.0174	Five-ply (1:2:2:2:1)
+45	.036	.689	.0554	.0422	.0364					Seven-ply (1:1:1:1:1:1:1)
+45	.036	.835	.0414	.0326	.0287	.0263	.0215	.0162	.0142	Three-ply (1:2:1)
+45	.036	.914	.0337	.0273	.0243	.0225	.0189	.0147	.0131	Three-ply (1:1:1)
+45	.036	.936	.0311	.0255	.0229	.0213	.0181	.0142	.0128	Three-ply (1:0.6:1)
+45	.036	.947	.0303	.0247	.0222	.0206	.0174	.0136	.0121	One-ply
-45	.036	.500	.0687	.0514	.0439	.0394	.0308	.0215	.0184	∞-ply
-45	.036	.584	.0743	.0553	.0470	.0421	.0327	.0226	.0192	Five-ply (1:2:2:2:1)
-45	.036	.689	.0798	.0592	.0502	.0448	.0346	.0238	.0202	Seven-ply (1:1:1:1:1:1:1)
-45	.036	.835	.0900	.0660	.0557	.0496	.0380	.0257	.0217	Three-ply (1:2:1)
-45	.036	.914	.0905	.0667	.0564	.0502	.0385	.0261	.0220	Three-ply (1:1:1)
-45	.036	.936	.0874	.0649	.0550	.0491	.0378	.0257	.0217	Three-ply (1:0.6:1)
-45	.036	.943	.0838	.0626	.0532	.0476	.0368	.0252	.0213	Three-ply (1:0.4:1)
-45	.036	.947	.0595	.0457	.0395	.0357	.0283	.0200	.0172	One-ply
90	.056	.500	.0578	.0517	.0488	.0469	.0427	.0362	.0332	∞-ply
90	.056	.584	.0612	.0553	.0525	.0506	.0463	.0395	.0363	Five-ply (1:2:2:2:1)
90	.056	.689	.0644	.0587	.0558	.0539	.0494	.0420	.0385	Seven-ply (1:1:1:1:1:1:1)
90	.056	.835	.0689	.0643	.0619	.0601	.0559	.0483	.0445	Three-ply (1:2:1)
90	.056	.914	.0695	.0648	.0621	.0601	.0552	.0469	.0429	Three-ply (1:1:1)
90	.056	.926	.0692	.0643	.0615	.0594	.0544	.0458	.0417	Three-ply (1:0.8:1)
90	.056	.936	.0684	.0633	.0603	.0582	.0528	.0441	.0400	Three-ply (1:0.6:1)
90	.056	.943	.0670	.0615	.0583	.0560	.0503	.0414	.0374	Three-ply (1:0.4:1)
90	.056	.947	.0546	.0475	.0436	.0410	.0353	.0274	.0244	One-ply
0	.056	.500	.0578	.0517	.0488	.0469	.0427	.0362	.0332	∞-ply
0	.056	.584	.0540	.0477	.0448	.0429	.0388	.0326	.0298	Five-ply (1:2:2:2:1)
0	.056	.689	.0487	.0424	.0396	.0378	.0340	.0285	.0261	Seven-ply (1:1:1:1:1:1:1)
0	.056	.835	.0378	.0317	.0291	.0274	.0240	.0194	.0175	Three-ply (1:2:1)
0	.056	.914	.0302	.0247	.0224	.0209	.0181	.0145	.0130	Three-ply (1:1:1)
0	.056	.947	.0252	.0206	.0187	.0175	.0152	.0122	.0110	One-ply
+45	.056	.500	.0747	.0571	.0493	.0445	.0352	.0250	.0215	∞-ply
+45	.056	.584	.0684	.0527	.0457	.0414	.0330	.0237	.0205	Five-ply (1:2:2:2:1)
+45	.056	.689	.0610	.0475	.0414					Seven-ply (1:1:1:1:1:1:1)
+45	.056	.835	.0459	.0370	.0330	.0304	.0252	.0192	.0170	Three-ply (1:2:1)
+45	.056	.914	.0382	.0317	.0286	.0266	.0226	.0178	.0159	Three-ply (1:1:1)
+45	.056	.936	.0357	.0300	.0272	.0254	.0218	.0173	.0156	Three-ply (1:0.6:1)
+45	.056	.947	.0352	.0293	.0265	.0247	.0210	.0163	.0145	One-ply
-45	.056	.500	.0747	.0571	.0493	.0445	.0352	.0250	.0215	∞-ply
-45	.056	.584	.0807	.0613	.0526	.0474	.0373	.0262	.0224	Five-ply (1:2:2:2:1)
-45	.056	.689	.0860	.0651	.0558	.0502	.0393	.0274	.0234	Seven-ply (1:1:1:1:1:1:1)
-45	.056	.835	.0974	.0728	.0620	.0555	.0430	.0296	.0251	Three-ply (1:2:1)
-45	.056	.914	.0964	.0725	.0619	.0555	.0432	.0297	.0252	Three-ply (1:1:1)
-45	.056	.936	.0920	.0697	.0597	.0537	.0419	.0290	.0247	Three-ply (1:0.6:1)
-45	.056	.943	.0872	.0665	.0572	.0515	.0404	.0282	.0240	Three-ply (1:0.4:1)
-45	.056	.947	.0600	.0465	.0405	.0368	.0296	.0213	.0184	One-ply

(continued)

Table 2.--(continued)

θ	$\frac{\mu_{LT}}{E_L}$	$\frac{E_1}{E_1 + E_2}$	$k_{theoretical}$ for certain values of J							Plywood construction
			J = 250	J = 500	J = 750	J = 1,000	J = 2,000	J = 6,000	J = 10,000	
Degrees										
90	0.090	0.500	0.0692	0.0611	0.0570	0.0544	0.0483	0.0393	0.0355	∞-ply
90	.090	.584	.0734	.0655	.0614	.0587	.0525	.0430	.0388	Five-ply (1:2:2:2:1)
90	.090	.689	.0773	.0694	.0652	.0624	.0557	.0456	.0411	Seven-ply (1:1:1:1:1:1:1)
90	.090	.835	.0836	.0768	.0730	.0702	.0636	.0528	.0479	Three-ply (1:2:1)
90	.090	.914	.0838	.0764	.0722	.0692	.0619	.0505	.0455	Three-ply (1:1:1)
90	.090	.926	.0830	.0755	.0711	.0680	.0605	.0491	.0441	Three-ply (1:0.8:1)
90	.090	.936	.0817	.0738	.0692	.0660	.0583	.0469	.0421	Three-ply (1:0.6:1)
90	.090	.943	.0792	.0708	.0660	.0626	.0549	.0437	.0390	Three-ply (1:0.4:1)
90	.090	.947	.0605	.0513	.0466	.0435	.0368	.0281	.0248	One-ply
0	.090	.500	.0692	.0611	.0570	.0544	.0483	.0393	.0355	∞-ply
0	.090	.584	.0645	.0562	.0522	.0496	.0438	.0354	.0319	Five-ply (1:2:2:2:1)
0	.090	.689	.0581	.0501	.0462	.0438	.0384	.0310	.0278	Seven-ply (1:1:1:1:1:1:1)
0	.090	.835	.0448	.0371	.0335	.0314	.0267	.0208	.0186	Three-ply (1:2:1)
0	.090	.914	.0361	.0292	.0261	.0242	.0203	.0156	.0139	Three-ply (1:1:1)
0	.090	.947	.0305	.0247	.0222	.0206	.0174	.0134	.0119	One-ply
+45	.090	.500	.0817	.0640	.0559	.0509	.0410	.0296	.0256	∞-ply
+45	.090	.584	.0750	.0593	.0521	.0476	.0386	.0282	.0245	Five-ply (1:2:2:2:1)
+45	.090	.689	.0677	.0541	.0478	.....	.....	.....	.....	Seven-ply (1:1:1:1:1:1:1)
+45	.090	.835	.0511	.0485	.0383	.0357	.0302	.0234	.0208	Three-ply (1:2:1)
+45	.090	.914	.0439	.0375	.0343	.0323	.0279	.0221	.0199	Three-ply (1:1:1)
+45	.090	.936	.0417	.0360	.0331	.0312	.0272	.0217	.0195	Three-ply (1:0.6:1)
+45	.090	.947	.0418	.0357	.0325	.0304	.0259	.0200	.0178	One-ply
-45	.090	.500	.0817	.0640	.0559	.0509	.0410	.0296	.0256	∞-ply
-45	.090	.584	.0880	.0685	.0596	.0541	.0432	.0309	.0267	Five-ply (1:2:2:2:1)
-45	.090	.689	.0929	.0720	.0625	.0567	.0451	.0321	.0276	Seven-ply (1:1:1:1:1:1:1)
-45	.090	.835	.1055	.0808	.0696	.0628	.0495	.0346	.0296	Three-ply (1:2:1)
-45	.090	.914	.1026	.0791	.0683	.0618	.0488	.0344	.0294	Three-ply (1:1:1)
-45	.090	.936	.0965	.0749	.0650	.0589	.0468	.0331	.0284	Three-ply (1:0.6:1)
-45	.090	.943	.0906	.0707	.0615	.0559	.0446	.0318	.0273	Three-ply (1:0.4:1)
-45	.090	.947	.0607	.0475	.0416	.0380	.0310	.0227	.0198	One-ply

ZM 61596 F

Table 3.—Results of torsion tests on thin-walled plywood cylinders 10-1/2 inches in diameter

Specimen number	Plywood: Species	Plywood: Number of plies	Plywood: Nominal ply thicknesses: F	Plywood: Nominal ply thicknesses: XB	Plywood: Nominal ply thicknesses: C	Plywood: θ	Moisture content	Outside diameter (2r+h)	Flywood thickness (h)	Length (b)	Failing torque	Failure	$J = \frac{b^2}{rh}$	Maximum shearing stress τ	Modulus of elasticity E_L	k_{test}	Modulus of rigidity μ_{LT}	$\frac{E_1}{E_1 + E_2}$	$\frac{\mu_{LT}}{E_L}$	$k_{theoretical}$ [1]
(1)	(2)	(3)	(4)	(5)	(6)	(7)	(8)	(9)	(10)	(11)	(12)	(13)	(14)	(15)	(16)	(17)	(18)	(19)	(20)	(21)
			Inch	Inch	Inch	Degrees	Percent	Inches	Inch	Inches	Inch-pounds			Pounds per square inch	1,000 pounds per square inch		1,000 pounds per square inch			
CT1-1	Yellow birch	3	0.010		0.010	0	8.9	10.65	0.030	38.5	893	Buckling	9,300	168	2,901	0.0102		0.924	0.0436	0.0118
CT1-2	Do.	3	.010		.010	0	8.9	10.64	.033	38.5	1,238	...do...	8,470	212	2,901	.0118		.924	.0436	.0120
CT1-3	Do.	3	.010		.010	0	9.1	10.65	.033	38.5	864	...do...	8,460	148	2,901	.0082		.924	.0436	.0120
CT2-1	Yellow birch	3	.010		.010	0	7.6	10.65	.031	28.5	930	Buckling	4,930	169	2,654	.0109		.924	.0436	.0136
CT2-2	Do.	3	.010		.010	0	7.7	10.62	.031	28.5	1,020	...do...	4,950	187	2,654	.0120		.924	.0436	.0136
CT2-3	Do.	3	.010		.010	0	7.6	10.62	.031	28.5	1,020	...do...	4,950	187	2,654	.0120		.924	.0436	.0136
CT3-2	Yellow birch	3	.010		.010	0	7.1	10.62	.031	18.5	1,020	Buckling	2,090	187	2,459	.0130		.924	.0436	.0159
CT4-1	Yellow birch	3	.010		.010	0	7.4	10.63	.031	8.5	1,710	Buckling	440	313	2,770	.0193		.924	.0436	.0225
CT4-2	Do.	3	.010		.010	0	7.3	10.62	.031	8.5	1,710	...do...	440	313	2,770	.0193		.924	.0436	.0225
CT4-3	Do.	3	.010		.010	0	7.6	10.64	.030	8.5	1,740	...do...	454	328	2,770	.0209		.924	.0436	.0225
CT5-1	Yellow birch	3	.010		.010	90	9.4	10.63	.031	38.5	3,096	Buckling	9,020	566	2,571	.0376		.924	.0436	.0409
CT5-2	Do.	3	.010		.010	90	8.7	10.65	.031	38.5	2,779	...do...	9,000	506	2,571	.0337		.924	.0436	.0410
CT5-3	Do.	3	.010		.010	90	9.3	10.63	.032	38.5	3,154	...do...	8,740	559	2,571	.0360		.924	.0436	.0413
CT6-1	Yellow birch	3	.010		.010	90	7.9	10.61	.029	28.5	3,300	Buckling	5,290	647	2,551	.0463		.924	.0436	.0445
CT6-2	Do.	3	.010		.010	90	7.2	10.62	.030	28.5	3,270	...do...	5,110	619	2,551	.0428		.924	.0436	.0450
CT6-3	Do.	3	.010		.010	90	7.2	10.60	.029	28.5	3,630	...do...	5,300	713	2,551	.0509		.924	.0436	.0445
CT7-1	Yellow birch	3	.010		.010	90	7.4	10.62	.030	18.5	3,450	Breaking	2,150	653	2,602	.0443		.924	.0436	.0504
CT8-1	Yellow birch	3	.010		.010	90	7.2	10.60	.030	8.5	5,220	Buckling	456	991	2,730	.0639		.924	.0436	.0591
CT8-3	Do.	3	.010		.010	90	7.0	10.60	.030	8.5	4,830	...do...	456	917	2,730	.0591		.924	.0436	.0591
CT9-1	Yellow birch	3	.010		.010	+45	9.2	10.65	.030	38.5	1,980	Buckling	9,300	373	2,601	.0254		.924	.0436	.0141
CT9-2	Do.	3	.010		.010	+45	9.1	10.68	.032	38.5	1,656	...do...	8,700	291	2,601	.0186		.924	.0436	.0143
CT9-3	Do.	3	.010		.010	+45	8.5	10.67	.032	38.5	1,922	...do...	8,710	338	2,601	.0216		.924	.0436	.0143
CT10-1	Yellow birch	3	.010		.010	+45	7.3	10.65	.029	28.5	1,380	Buckling	5,270	269	2,418	.0204		.924	.0436	.0160
CT10-2	Do.	3	.010		.010	+45	7.7	10.60	.029	28.5	1,230	...do...	5,300	242	2,418	.0182		.924	.0436	.0160
CT10-3	Do.	3	.010		.010	+45	7.3	10.65	.031	28.5	1,140	...do...	4,930	208	2,418	.0147		.924	.0436	.0162
CT11-1	Yellow birch	3	.010		.010	+45	6.6	10.65	.031	18.5	1,530	Buckling	2,080	279	2,343	.0204		.924	.0436	.0197
CT11-3	Do.	3	.010		.010	+45	7.0	10.65	.031	18.5	1,680	...do...	2,080	306	2,343	.0224		.924	.0436	.0197
CT12-1	Yellow birch	3	.010		.010	+45	6.9	10.64	.031	8.5	2,250	Buckling	439	411	2,537	.0277		.924	.0436	.0296
CT12-2	Do.	3	.010		.010	+45	6.5	10.65	.028	8.5	2,010	...do...	486	405	2,537	.0303		.924	.0436	.0287
CT12-3	Do.	3	.010		.010	+45	6.9	10.63	.030	8.5	2,130	...do...	454	402	2,537	.0280		.924	.0436	.0293
CT13-1	Yellow birch	3	.010		.010	-45	8.5	10.64	.031	38.5	1,152	Buckling	9,010	210	2,772	.0130		.924	.0436	.0240
CT13-2	Do.	3	.010		.010	-45	8.7	10.65	.032	38.5	1,188	...do...	8,720	210	2,772	.0126		.924	.0436	.0244
CT13-3	Do.	3	.010		.010	-45	9.2	10.68	.032	38.5	1,152	...do...	8,700	202	2,772	.0121		.924	.0436	.0244
CT14-1	Yellow birch	3	.010		.010	-45	7.4	10.65	.030	28.5	2,670	Buckling	5,100	502	2,854	.0311		.924	.0436	.0297
CT14-2	Do.	3	.010		.010	-45	7.2	10.65	.031	28.5	2,430	...do...	4,930	443	2,854	.0266		.924	.0436	.0300
CT14-3	Do.	3	.010		.010	-45	7.1	10.62	.030	28.5	2,460	...do...	5,110	465	2,854	.0287		.924	.0436	.0297
CT15-2	Yellow birch	3	.010		.010	-45	7.1	10.65	.030	18.5	3,090	Buckling	2,150	581	2,382	.0432		.924	.0436	.0396
CT15-3	Do.	3	.010		.010	-45	6.8	10.65	.031	18.5	3,030	...do...	2,080	552	2,382	.0397		.924	.0436	.0397
CT16-1	Yellow birch	3	.010		.010	-45	6.2	10.60	.030	8.5	5,100	Buckling	456	968	2,492	.0684		.924	.0436	.0713
CT16-2	Do.	3	.010		.010	-45	6.7	10.64	.028	8.5	4,860	...do...	486	981	2,492	.0746		.924	.0436	.0693
CT16-3	Do.	3	.010		.010	-45	6.9	10.63	.029	8.5	4,740	...do...	470	926	2,492	.0680		.924	.0436	.0701

(continued)

ZM 61597 F

Table 3.--(continued)

Specimen number	Plywood: Species	Plywood: Number of plies	Plywood: Nominal ply thickness: F	Plywood: Nominal ply thickness: XB	Plywood: Nominal ply thickness: C	Plywood: Grain angle	Moisture content	Outside diameter (2r + h)	Plywood thickness (h)	Length (b)	Failing torque	Failure	$J = \frac{b^2}{rh}$	Maximum shearing stress τ	Modulus of elasticity E_L	k_{test}	Modulus of rigidity μ_{LT}	$\frac{\mu_1}{E_1 + E_2}$	$\frac{\mu_{LT}}{E_L}$	$k_{theoretical}$[1]
(1)	(2)	(3)	(4)	(5)	(6)	(7)	(8)	(9)	(10)	(11)	(12)	(13)	(14)	(15)	(16)	(17)	(18)	(19)	(20)	(21)
			Inch	Inch	Inch	Degrees	Percent	Inches	Inch	Inches	Inch-pounds			Pounds per square inch	1,000 pounds per square inch		1,000 pounds per square inch			
CT32-1	Yellow-poplar	3	0.0100	.....	0.0250	90	3.9	10.68	0.0420	38.5	4,932	Breaking	6,640	660	1,740	0.0480	100	0.803	0.0575	0.0462
CT32-2	Do.....	3	.0100	.....	.0250	90	3.4	10.68	.0420	38.5	5,551	...do...	6,640	745	1,740	.0542	155	.803	.0891	.0501
CT33-1	Yellow-poplar	3	.0100	.....	.0250	90	3.8	10.66	.0460	28.5	4,824	Splitting	3,330	592	1,965	.0348	84	.803	.0428	.0474
CT33-2	Do.....	3	.0100	.....	.0250	90	4.0	10.67	.0470	28.5	4,788	...do...	3,260	574	1,965	.0330	88	.803	.0450	.0481
CT34-1	Yellow-poplar	3	.0100	.....	.0250	90	4.6	10.68	.0470	18.5	5,616	Breaking	1,370	674	1,771	.0430	62	.803	.0353	.0483
CT34-2	Do.....	3	.0100	.....	.0250	90	4.4	10.67	.0410	18.5	5,472	...do...	1,570	751	1,771	.0550	.....	.803	.....	.....
CT34-3	Do.....	3	.0100	.....	.0250	90	4.6	10.69	.0470	18.5	5,184	...do...	1,370	620	1,771	.0397	62	.803	.0350	.0481
CT35-1	Yellow-poplar	3	.0100	.....	.0250	90	3.4	10.67	.0440	8.5	7,416	Splitting	309	950	1,586	.0723	103	.803	.0649	.0706
CT35-2	Do.....	3	.0100	.....	.0250	90	3.9	10.66	.0460	8.5	7,452	...do...	296	916	1,586	.0666	73	.803	.0460	.0623
CT35-3	Do.....	3	.0100	.....	.0250	90	3.9	10.70	.0450	8.5	6,552	...do...	302	815	1,586	.0608	98	.803	.0618	.0694
CT36-1	Yellow birch	4	.0100	.....	2-0.010	0	7.0	10.74	.0410	38.5	3,100	Buckling	6,760	420	2,725	.0201	112	.843	.0411	.0178
CT36-2	Do.....	4	.0100	.....	2-0.010	0	9.0	10.70	.0420	38.5	2,960	...do...	6,620	400	2,725	.0186	132	.843	.0485	.0185
CT36-3	Do.....	4	.0100	.....	2-0.010	0	8.5	10.76	.0420	38.5	2,940	...do...	6,580	390	2,725	.0183	131	.843	.0481	.0185
CT36-4	Do.....	4	.0100	.....	2-0.010	0	9.0	10.69	.0415	38.5	3,240	...do...	6,710	440	2,725	.0207	134	.843	.0492	.0186
CT36-5	Do.....	4	.0100	.....	2-0.010	0	9.0	10.78	.0410	38.5	3,060	...do...	6,730	410	2,725	.0197	134	.843	.0492	.0185
CT37-1	Yellow birch	4	.0100	.....	2-0.010	0	9.0	10.69	.0415	28.5	3,420	Buckling	3,680	460	2,642	.0223	130	.843	.0492	.0206
CT37-2	Do.....	4	.0100	.....	2-0.010	0	9.1	10.73	.0415	28.5	3,320	...do...	3,660	440	2,642	.0214	135	.843	.0511	.0207
CT37-3	Do.....	4	.0100	.....	2-0.010	0	8.7	10.70	.0415	28.5	3,480	...do...	3,670	470	2,642	.0228	116	.843	.0439	.0200
CT37-4	Do.....	4	.0100	.....	2-0.010	0	8.8	10.77	.0420	28.5	3,380	...do...	3,610	450	2,642	.0218	126	.843	.0477	.0206
CT37-5	Do.....	4	.0100	.....	2-0.010	0	9.1	10.71	.0410	28.5	3,180	...do...	3,710	440	2,642	.0218	136	.843	.0514	.0208
CT38-1	Yellow birch	4	.0100	.....	2-0.010	0	9.2	10.70	.0400	18.5	3,940	Buckling	1,610	550	2,606	.0281	140	.843	.0538	.0240
CT38-2	Do.....	4	.0100	.....	2-0.010	0	9.5	10.68	.0420	18.5	3,800	...do...	1,530	510	2,606	.0248	120	.843	.0461	.0232
CT38-3	Do.....	4	.0100	.....	2-0.010	0	9.2	10.68	.0410	18.5	3,980	...do...	1,570	540	2,606	.0269	140	.843	.0538	.0241
CT38-4	Do.....	4	.0100	.....	2-0.010	0	8.9	10.70	.0420	18.5	4,180	...do...	1,530	560	2,606	.0273	110	.843	.0422	.0227
CT38-5	Do.....	4	.0100	.....	2-0.010	0	9.2	10.68	.0420	18.5	4,080	...do...	1,530	540	2,606	.0263	128	.843	.0492	.0236
CT39-1	Yellow birch	4	.0100	.....	2-0.010	0	9.5	10.69	.0410	8.5	4,960	Buckling	331	680	2,606	.0339	127	.843	.0488	.0326
CT39-2	Do.....	4	.0100	.....	2-0.010	0	9.5	10.66	.0425	8.5	5,240	...do...	320	710	2,606	.0341	134	.843	.0514	.0334
CT39-3	Do.....	4	.0100	.....	2-0.010	0	9.3	10.67	.0410	8.5	5,280	...do...	332	730	2,606	.0363	116	.843	.0445	.0317
CT39-4	Do.....	4	.0100	.....	2-0.010	0	9.4	10.69	.0420	8.5	5,120	...do...	323	680	2,606	.0331	110	.843	.0422	.0313
CT39-5	Do.....	4	.0100	.....	2-0.010	0	9.5	10.67	.0420	8.5	5,440	...do...	324	730	2,606	.0354	121	.843	.0465	.0323
CT40-1	Yellow birch	4	.0100	.....	2-0.010	90	9.1	10.72	.0420	38.5	6,480	Breaking	6,600	860	2,636	.0415	117	.843	.0444	.0442
CT40-2	Do.....	4	.0100	.....	2-0.010	90	9.8	10.76	.0430	38.5	6,360	Buckling and breaking	6,430	820	2,636	.0388	122	.843	.0463	.0451
CT40-3	Do.....	4	.0100	.....	2-0.010	90	9.2	10.70	.0420	34.0	6,800	Buckling and breaking	5,160	920	2,636	.0443	140	.843	.0531	.0423
CT40-4	Do.....	4	.0100	.....	2-0.010	90	9.7	10.73	.0420	38.5	6,200	Breaking	6,600	820	2,636	.0396	115	.843	.0436	.0446
CT41-1	Yellow birch	4	.0100	.....	2-0.010	90	9.1	10.69	.0420	28.5	7,420	Breaking	3,630	990	2,632	.0477	130	.843	.0494	.0500
CT41-2	Do.....	4	.0100	.....	2-0.010	90	9.6	10.68	.0400	28.5	8,020	Buckling and breaking	3,820	1,130	2,632	.0571	128	.843	.0486	.0495
CT41-3	Do.....	4	.0100	.....	2-0.010	90	9.4	10.68	.0420	28.5	7,980	Breaking	3,640	1,070	2,632	.0514	128	.843	.0486	.0499
CT41-4	Do.....	4	.0100	.....	2-0.010	90	9.8	10.69	.0430	28.5	7,900	...do...	3,550	1,030	2,632	.0485	120	.843	.0456	.0492
CT41-5	Do.....	4	.0100	.....	2-0.010	90	9.7	10.69	.0420	28.5	7,500	...do...	3,630	1,000	2,632	.0482	122	.843	.0464	.0492

(continued)

Table 3.--(continued)

Specimen number	Plywood: Species	Plywood: Number of plies	Plywood: Nominal ply thickness: F	Plywood: Nominal ply thickness: XB	Plywood: Nominal ply thickness: C	ϕ	Moisture content	Outside diameter (2r + h)	Plywood thickness (h)	Length (b)	Failing torque	Failure	$J = \frac{b^2}{rh}$	Maximum shearing stress τ	Modulus of elasticity E_L	k_{test}	Modulus of rigidity μ_{LT}	$\frac{E_1}{E_1 + E_2}$	$\frac{\mu_{LT}}{E_L}$	$k_{theoretical}$ [1]
(1)	(2)	(3)	(4)	(5)	(6)	(7)	(8)	(9)	(10)	(11)	(12)	(13)	(14)	(15)	(16)	(17)	(18)	(19)	(20)	(21)
			Inch	Inch	Inch	Degrees	Percent	Inches	Inch	Inches	Inch-pounds			Pounds per square inch	1,000 pounds per square inch		1,000 pounds per square inch			
CT42-1	Yellow birch	4	0.0100	.....	2-0.010	90	9.5	10.69	0.0425	18.5	8,420	Breaking	1,510	1,110	2,625	0.0530	120	0.843	0.0457	0.0541
CT42-2	Do.	4	.0100	.....	2-0.010	90	9.2	10.69	.0430	18.5	8,440	Buckling	1,490	1,100	2,625	.0519	120	.843	.0457	.0543
CT42-3	Do.	4	.0100	.....	2-0.010	90	9.7	10.66	.0415	18.5	7,800	Breaking	1,550	1,060	2,625	.0516	131	.843	.0499	.0554
CT42-4	Do.	4	.0100	.....	2-0.010	90	9.4	10.69	.0410	18.5	8,340	...do...	1,570	1,140	2,625	.0564	126	.843	.0480	.0547
CT42-5	Do.	4	.0100	.....	2-0.010	90	9.6	10.65	.0420	18.5	7,960	...do...	1,540	1,070	2,625	.0515	126	.843	.0480	.0550
CT43-1	Yellow birch	4	.0100	.....	2-0.010	90	9.5	10.68	.0410	8.5	9,600	Breaking	331	1,320	2,625	.0652	106	.843	.0404	.0592
CT43-2	Do.	4	.0100	.....	2-0.010	90	9.3	10.69	.0420	8.5	8,960	Buckling	323	1,200	2,625	.0580	127	.843	.0484	.0640
CT43-3	Do.	4	.0100	.....	2-0.010	90	9.0	10.65	.0420	8.5	9,520	Breaking	324	1,280	2,625	.0616	136	.843	.0518	.0658
CT43-4	Do.	4	.0100	.....	2-0.010	90	8.9	10.69	.0415	8.5	9,060	...do...	327	1,230	2,625	.0602	103	.843	.0392	.0585
CT43-5	Do.	4	.0100	.....	2-0.010	90	9.0	10.70	.0410	8.5	8,600	...do...	331	1,170	2,625	.0579	102	.843	.0389	.0582
CT44-1	Yellow birch	5	.0100	0.0156	0.0156	0	7.9	10.75	.0630	38.5	11,920	Breaking	4,400	1,050	2,421	.0368	120	.655	.0496	.0307
CT44-2	Do.	5	.0100	.0156	.0156	0	9.0	10.79	.0630	38.5	11,740	Buckling and breaking	4,380	1,030	2,421	.0362	109	.655	.0450	.0302
CT44-3	Do.	5	.0100	.0156	.0156	0	8.7	10.75	.0600	38.5	12,280	Breaking	4,620	1,140	2,421	.0419	110	.655	.0454	.0299
CT44-4	Do.	5	.0100	.0156	.0156	0	8.8	10.80	.0640	38.5	11,940	...do...	4,310	1,030	2,421	.0357	122	.655	.0504	.0310
CT44-5	Do.	5	.0100	.0156	.0156	0	8.7	10.75	.0635	38.5	11,800	Buckling and breaking	4,370	1,030	2,421	.0358	102	.655	.0421	.0297
CT45-1	Yellow birch	5	.0100	.0156	.0156	0	9.4	10.70	.0680	28.5	13,460	Breaking	2,250	1,120	2,400	.0365	101	.655	.0421	.0324
CT45-2	Do.	5	.0100	.0156	.0156	0	8.9	10.75	.0665	28.5	14,100	...do...	2,290	1,180	2,400	.0395	94	.655	.0392	.0316
CT45-3	Do.	5	.0100	.0156	.0156	0	8.6	10.76	.0670	28.5	13,860	...do...	2,270	1,150	2,400	.0382	90	.655	.0375	.0312
CT45-4	Do.	5	.0100	.0156	.0156	0	9.0	10.75	.0665	28.5	13,840	...do...	2,280	1,160	2,400	.0388	88	.655	.0367	.0310
CT45-5	Do.	5	.0100	.0156	.0156	0	9.1	10.74	.0680	28.5	14,100	...do...	2,240	1,160	2,400	.0379	104	.655	.0433	.0327
CT46-1	Yellow birch	5	.0100	.0156	.0156	0	8.9	10.73	.0665	18.5	15,100	Buckling and breaking	966	1,270	2,711	.0376	129	.655	.0476	.0382
CT46-2	Do.	5	.0100	.0156	.0156	0	9.4	10.76	.0675	18.5	15,520	Breaking	948	1,280	2,711	.0374	124	.655	.0457	.0377
CT46-3	Do.	5	.0100	.0156	.0156	0	9.1	10.76	.0675	18.5	15,850	...do...	948	1,310	2,711	.0383	87	.655	.0321	.0327
CT46-4	Do.	5	.0100	.0156	.0156	0	8.6	10.68	.0685	18.5	16,200	...do...	935	1,320	2,711	.0380	92	.655	.0325	.0333
CT46-5	Do.	5	.0100	.0156	.0156	0	9.1	10.75	.0675	18.5	16,200	...do...	949	1,340	2,711	.0391	88	.655	.0339	.0337
CT47-1	Yellow birch	5	.0100	.0156	.0156	0	8.2	10.72	.0670	8.5	20,200	Breaking	202	1,690	2,711	.0495	87	.655	.0321	.0407
CT47-2	Do.	5	.0100	.0156	.0156	0	9.9	10.73	.0685	8.5	20,100	...do...	198	1,640	2,711	.0471	98	.655	.0361	.0437
CT47-3	Do.	5	.0100	.0156	.0156	0	8.7	10.77	.0680	8.5	20,550	...do...	199	1,680	2,711	.0487	90	.655	.0332	.0415
CT47-4	Do.	5	.0100	.0156	.0156	0	8.5	10.75	.0680	8.5	20,200	...do...	199	1,660	2,711	.0481	92	.655	.0339	.0422
CT47-5	Do.	5	.0100	.0156	.0156	0	8.4	10.76	.0670	8.5	19,900	...do...	202	1,660	2,711	.0489	95	.655	.0350	.0428
CT48-1	Yellow birch	5	.0100	.0156	.0156	90	8.5	10.76	.0630	38.5	14,700	Breaking	4,400	1,300	2,549	.0433	139	.655	.0545	.0436
CT48-2	Do.	5	.0100	.0156	.0156	90	8.9	10.75	.0610	38.5	15,350	...do...	4,540	1,400	2,549	.0481	118	.655	.0463	.0416
CT48-3	Do.	5	.0100	.0156	.0156	90	8.8	10.78	.0620	38.5	16,050	...do...	4,420	1,440	2,549	.0488	112	.655	.0439	.0412
CT48-4	Do.	5	.0100	.0156	.0156	90	8.5	10.75	.0620	38.5	15,700	...do...	4,470	1,410	2,549	.0477	117	.655	.0459	.0415
CT48-5	Do.	5	.0100	.0156	.0156	90	8.5	10.78	.0620	38.5	14,000	...do...	4,420	1,250	2,549	.0424	105	.655	.0412	.0404
CT49-1	Yellow birch	5	.0100	.0156	.0156	0	8.4	10.80	.0665	28.5	12,500	Breaking	2,280	1,040	2,639	.0318	100	.655	.0379	.0427
CT49-2	Do.	5	.0100	.0156	.0156	0	8.6	10.77	.0670	28.5	13,500	...do...	2,260	1,120	2,639	.0339	105	.655	.0398	.0435
CT49-3	Do.	5	.0100	.0156	.0156	90	8.8	10.75	.0670	28.5	16,850	...do...	2,270	1,400	2,639	.0423	102	.655	.0387	.0431
CT49-4	Do.	5	.0100	.0156	.0156	90	8.5	10.72	.0650	28.5	17,850	...do...	2,350	1,540	2,639	.0478	99	.655	.0375	.0425
CT49-5	Do.	5	.0100	.0156	.0156	90	8.7	10.72	.0670	28.5	17,950	...do...	2,290	1,500	2,639	.0452	98	.655	.0371	.0423

(continued)

Table 3.—(continued)

Specimen number	Plywood: Species	Plywood: Number of plies	Plywood: Nominal ply thicknesses: F	Plywood: Nominal ply thicknesses: XB	Plywood: Nominal ply thicknesses: C	Plywood: θ	Moisture content	Outside diameter (2r + h)	Plywood thickness (h)	Length (b)	Failing torque	Failure	$J = \frac{b^2}{rh}$	Maximum shearing stress τ	Modulus of elasticity E_L	k_{test}	Modulus of rigidity μ_{LT}	$\frac{E_1}{E_1 + E_2}$	$\frac{\mu_{LT}}{E_L}$	$k_{theoretical}$ [1]
(1)	(2)	(3)	(4)	(5)	(6)	(7)	(8)	(9)	(10)	(11)	(12)	(13)	(14)	(15)	(16)	(17)	(18)	(19)	(20)	(21)
			Inch	Inch	Inch	Degrees	Percent	Inches	Inch	Inches	Inch-Pounds			Pounds per square inch	1,000 pounds per square inch		1,000 pounds per square inch			
CT50-1	Yellow birch	5	0.010	0.0156	0.0156	90	8.3	10.75	0.0670	18.5	20,200	Breaking	960	1,680	2,589	0.0518	97	0.655	0.0375	0.0467
CT50-2	Do.	5	.010	.0156	.0156	90	8.9	10.75	.0660	18.5	19,650	...do...	970	1,660	2,589	.0519	94	.655	.0363	.0461
CT50-3	Do.	5	.010	.0156	.0156	90	8.7	10.75	.0665	18.5	18,650	...do...	960	1,560	2,589	.0484	97	.655	.0375	.0467
CT50-4	Do.	5	.010	.0516	.0156	90	8.6	10.75	.0670	18.5	18,900	...do...	960	1,570	2,589	.0484	98	.655	.0379	.0467
CT50-5	Do.	5	.010	.0156	.0156	90	9.1	10.75	.0670	18.5	17,000	...do...	960	1,420	2,589	.0437	99	.655	.0382	.0469
CT51-1	Yellow birch	5	.010	.0156	.0156	90	8.6	10.74	.0675	8.5	22,900	Breaking	201	1,900	2,589	.0581	91	.655	.0351	.0542
CT51-2	Do.	5	.010	.0156	.0156	90	8.6	10.74	.0640	8.5	22,550	...do...	211	1,970	2,589	.0634	105	.655	.0406	.0576
CT51-3	Do.	5	.010	.0156	.0156	90	8.4	10.75	.0640	8.5	21,750	...do...	211	1,890	2,589	.0610	112	.655	.0433	.0590
CT51-4	Do.	5	.010	.0156	.0156	90	8.2	10.78	.0640	8.5	24,550	...do...	211	2,120	2,589	.0685	100	.655	.0386	.0561
CT51-5	Do.	5	.010	.0156	.0156	90	9.3	10.74	.0640	8.5	20,600	...do...	212	1,800	2,589	.0580	106	.655	.0409	.0573
CT52-1	Yellow birch	5	.010	.0156	.0156	+45	9.1	10.77	.0620	38.5	10,850	Buckling	4,460	970	2,497	.0335	.....	.655	.0436	.0228
CT52-2	Do.	5	.010	.0156	.0156	+45	9.5	10.73	.0620	38.5	10,850	...do...	4,480	980	2,497	.0338	.....	.655	.0436	.0228
CT52-3	Do.	5	.010	.0156	.0156	+45	9.8	10.78	.0650	38.5	10,100	...do...	4,260	860	2,497	.0284	.....	.655	.0436	.0231
CT52-4	Do.	5	.010	.0156	.0156	+45	9.0	10.78	.0650	38.5	10,400	...do...	4,260	890	2,497	.0294	.....	.655	.0436	.0231
CT52-5	Do.	5	.010	.0156	.0156	+45	9.1	10.75	.0655	38.5	10,850	...do...	4,240	920	2,497	.0300	.....	.655	.0436	.0232
CT53-1	Yellow birch	5	.010	.0156	.0156	+45	9.0	10.72	.0640	28.5	12,250	Buckling	2,380	1,070	2,621	.0340	.....	.655	.0436	.0275
CT53-2	Do.	5	.010	.0156	.0156	+45	9.6	10.78	.0660	28.5	12,250	...do...	2,300	1,030	2,621	.0319	.....	.655	.0436	.0277
CT53-3	Do.	5	.010	.0156	.0156	+45	9.0	10.75	.0660	28.5	12,750	Breaking	2,300	1,080	2,621	.0334	.....	.655	.0436	.0277
CT53-4	Do.	5	.010	.0156	.0156	+45	8.6	10.79	.0640	28.5	12,050	Buckling	2,370	1,040	2,621	.0333	.....	.655	.0436	.0275
CT53-5	Do.	5	.010	.0156	.0156	+45	9.0	10.77	.0640	28.5	12,950	...do...	2,370	1,120	2,621	.0357	.....	.655	.0436	.0275
CT54-1	Yellow birch	5	.010	.0156	.0156	+45	8.4	10.75	.0630	18.5	14,500	Breaking	1,020	1,280	2,607	.0417	.....	.655	.0436	.0357
CT54-2	Do.	5	.010	.0156	.0156	+45	9.2	10.76	.0650	18.5	16,100	...do...	980	1,380	2,607	.0436	.....	.655	.0436	.0362
CT54-3	Do.	5	.010	.0156	.0156	+45	9.2	10.75	.0630	18.5	15,450	...do...	1,020	1,370	2,607	.0446	.....	.655	.0436	.0357
CT54-4	Do.	5	.010	.0156	.0156	+45	9.5	10.78	.0630	18.5	15,200	...do...	1,010	1,340	2,607	.0437	.....	.655	.0436	.0357
CT54-5	Do.	5	.010	.0156	.0156	+45	9.4	10.78	.0650	18.5	15,750	...do...	980	1,340	2,607	.0424	.....	.655	.0436	.0362
CT55-1	Yellow birch	5	.010	.0156	.0156	+45	8.6	10.75	.0660	8.5	22,400	Breaking	205	1,890	2,607	.0587	.....	.655	.0436	.0637
CT55-2	Do.	5	.010	.0156	.0156	+45	8.9	10.75	.0660	8.5	20,800	...do...	205	1,760	2,607	.0546	.....	.655	.0436	.0637
CT55-3	Do.	5	.010	.0156	.0156	+45	9.0	10.75	.0655	8.5	21,900	...do...	206	1,860	2,607	.0582	.....	.655	.0436	.0637
CT55-4	Do.	5	.010	.0156	.0156	+45	8.5	10.74	.0630	8.5	21,700	...do...	215	1,920	2,607	.0625	.....	.655	.0436	.0630
CT55-5	Do.	5	.010	.0156	.0156	+45	8.4	10.76	.0670	8.5	23,900	...do...	202	1,990	2,607	.0610	.....	.655	.0436	.0638
CT56-1	Yellow birch	5	.010	.0156	.0156	-45	9.4	10.78	.0640	38.5	11,200	Buckling and breaking	4,320	970	2,623	.0309	.....	.655	.0436	.0286
CT56-2	Do.	5	.010	.0156	.0156	-45	8.9	10.76	.0610	38.5	11,100	Buckling	4,540	1,010	2,623	.0338	.....	.655	.0436	.0282
CT56-3	Do.	5	.010	.0156	.0156	-45	8.6	10.76	.0610	38.5	11,100	...do...	4,540	1,010	2,623	.0338	.....	.655	.0436	.0282
CT56-4	Do.	5	.010	.0156	.0156	-45	8.8	10.75	.0620	38.5	10,980	...do...	4,470	990	2,623	.0326	.....	.655	.0436	.0283
CT56-5	Do.	5	.010	.0156	.0156	-45	9.0	10.73	.0610	38.5	11,600	...do...	4,560	1,060	2,623	.0354	.....	.655	.0436	.0278
CT57-1	Yellow birch	5	.010	.0156	.0156	-45	9.1	10.72	.0640	28.5	13,700	Buckling	2,380	1,200	2,423	.0412	.....	.655	.0436	.0347
CT57-2	Do.	5	.010	.0156	.0156	-45	9.0	10.74	.0620	28.5	15,150	Breaking	2,450	1,360	2,423	.0483	.....	.655	.0436	.0343
CT57-3	Do.	5	.010	.0156	.0156	-45	8.5	10.72	.0630	28.5	14,300	Buckling and breaking	2,420	1,270	2,423	.0443	.....	.655	.0436	.0346
CT57-4	Do.	5	.010	.0156	.0156	-45	9.4	10.75	.0650	28.5	14,100	Buckling	2,340	1,210	2,423	.0410	.....	.655	.0436	.0348
CT57-5	Do.	5	.010	.0156	.0156	-45	9.0	10.76	.0660	28.5	15,350	Breaking	2,300	1,300	2,423	.0435	.....	.655	.0436	.0350
CT58-1	Yellow birch	5	.010	.0156	.0156	-45	8.8	10.76	.0640	18.5	18,400	Breaking	1,000	1,600	2,648	.0504	.....	.655	.0436	.0463
CT58-2	Do.	5	.010	.0156	.0156	-45	9.0	10.77	.0650	18.5	19,200	...do...	980	1,640	2,648	.0510	.....	.655	.0436	.0467
CT58-3	Do.	5	.010	.0156	.0156	-45	8.7	10.73	.0670	18.5	19,000	...do...	960	1,590	2,648	.0478	.....	.655	.0436	.0470
CT58-4	Do.	5	.010	.0156	.0156	-45	8.8	10.75	.0660	18.5	19,300	...do...	970	1,630	2,648	.0498	.....	.655	.0436	.0468
CT58-5	Do.	5	.010	.0156	.0156	-45	9.1	10.77	.0660	18.5	18,900	...do...	970	1,590	2,648	.0487	.....	.655	.0436	.0468
CT59-1	Yellow birch	5	.010	.0156	.0156	-45	8.0	10.77	.0660	8.5	25,500	Breaking	205	2,150	2,648	.0658	.....	.655	.0436	.0879
CT59-2	Do.	5	.010	.0156	.0156	-45	8.5	10.78	.0670	8.5	24,300	...do...	202	2,010	2,648	.0606	.....	.655	.0436	.0879

[1] Values of $k_{theoretical}$ were not determined for specimens having values of J less than 50.

Z M 61601 F

Table 4.—Results of torsion tests on thin-walled plywood cylinders 3 inches in diameter

Specimen number	Plywood: Species	Plywood: Number of plies	Plywood: Nominal ply thickness F	Plywood: Nominal ply thickness C	θ	Moisture content	Outside diameter (2r + h)	Plywood thickness (h)	Length (b)	Failing torque	Failure	$J = \frac{b^2}{rh}$	Maximum shearing stress τ	Modulus of elasticity E_L	k_{test}	$\frac{E_1}{E_1 + E_2}$	$\frac{\mu_{LT}}{E_L}$	$k_{theoretical}$	λ	Shearing strength f_s	τ_{test} / f_s	$\tau_{theoretical}$ / f_s
(1)	(2)	(3)	(4)	(5)	(6)	(7)	(8)	(9)	(10)	(11)	(12)	(13)	(14)	(15)	(16)	(17)	(18)	(19)	(20)	(21)	(22)
			Inch	Inch	Degrees	Percent	Inches	Inch	Inches	Inch-pounds			Pounds per square inch	1,000 pounds per square inch					Pounds per square inch		
CT60-1	Yellow birch	4	0.010	2-0.010	90	9.3	2.96	0.039	5	1,710	Buckling and breaking	439	3,270	2,759	0.0444	0.843	0.0436	0.0593	4,720	0.692	0.924
CT60-2	Do.	4	.010	2-0.010	90	8.5	2.96	.038	5	1,812	do.	450	3,560	2,759	.0496	.843	.0436	.0592	4,720	.754	.900
CT60-3	Do.	4	.010	2-0.010	90	8.9	2.96	.039	5	1,764	do.	439	3,380	2,759	.0459	.843	.0436	.0593	4,720	.716	.924
CT61-1	Yellow birch	4	.010	2-0.010	90	9.0	2.96	.039	4	1,740	Breaking	281	3,330	2,814	.0443	.843	.0436	.0618	4,720	.706	.985
CT61-2	Do.	4	.010	2-0.010	90	8.0	2.96	.038	4	1,764	Buckling and breaking	288	3,470	2,814	.0474	.843	.0436	.0618	4,720	.735	.958
CT61-3	Do.	4	.010	2-0.010	90	8.5	2.96	.038	4	1,812	do.	288	3,360	2,814	.0486	.843	.0436	.0618	4,720	.754	.960
CT62-1	Yellow birch	4	.010	2-0.010	90	8.6	2.96	.045	3	2,076	Buckling and breaking	137	3,440	2,760	.0404	.843	.0436	.0652	4,720	.729	1.176
CT62-2	Do.	4	.010	2-0.010	90	8.8	2.97	.043	3	1,986	do.	143	3,440	2,760	.0424	.843	.0436	.0650	4,720	.729	1.117
CT62-3	Do.	4	.010	2-0.010	90	8.0	2.96	.042	3	2,190	do.	147	3,900	2,760	.0491	.843	.0436	.0650	4,720	.826	1.094
CT63-1	Yellow birch	4	.010	2-0.010	90	9.6	2.96	.041	2	2,010	Buckling and breaking	67	3,660	2,880	.0453	.843	.0436	.0677	4,720	.775	1.159
CT63-2	Do.	4	.010	2-0.010	90	8.0	2.96	.039	2	1,950	do.	70	3,740	2,880	.0486	.843	.0436	.0677	4,720	.792	1.104
CT64-1	Yellow birch	4	.010	2-0.010	90	.....	2.96	.039	1	2,424	Shearing	18	4,630	2,694	.0644	.843	.0436	.....	.....	.....	.....
CT64-2	Do.	4	.010	2-0.010	90	.....	2.96	.039	1	2,154	do.	18	4,120	2,694	.0572	.843	.0436	.....	.....	.....	.....
CT64-3	Do.	4	.010	2-0.010	90	.....	2.96	.040	1	2,070	Buckling and breaking	17	3,860	2,694	.0522	.843	.0436	.....	.....	.....	.....
CT65-1	Yellow birch	4	.010	2-0.010	90	.....	2.96	.038	0.5	2,376	Shearing	4	4,660	2,825	.0634	.843	.0436	.....	.....	.....	.....
CT65-2	Do.	4	.010	2-0.010	90	.....	2.96	.044	.5	2,532	do.	4	4,310	2,825	.0506	.843	.0436	.....	.....	.....	.....
CT65-3	Do.	4	.010	2-0.010	90	.....	2.96	.039	.5	2,268	do.	4	4,340	2,825	.0576	.843	.0436	.....	.....	.....	.....
CT66-1	Yellow birch	4	.010	2-0.010	0	8.0	2.96	.038	5	1,284	Buckling	450	2,520	2,856	.0339	.843	.0436	.0293	4,720	.534	.462
CT66-2	Do.	4	.010	2-0.010	0	8.2	2.96	.038	5	1,272	do.	450	2,500	2,856	.0337	.843	.0436	.0293	4,720	.530	.460
CT66-3	Do.	4	.010	2-0.010	0	8.2	2.96	.039	5	1,260	do.	439	2,410	2,856	.0316	.843	.0436	.0295	4,720	.510	.477
CT67-1	Yellow birch	4	.010	2-0.010	0	8.1	2.97	.038	4	1,440	Buckling	288	2,810	2,855	.0380	.843	.0436	.0325	4,720	.596	.508
CT67-2	Do.	4	.010	2-0.010	0	7.6	2.97	.040	4	1,794	do.	274	3,330	2,855	.0427	.843	.0436	.0326	4,720	.706	.538
CT67-3	Do.	4	.010	2-0.010	0	7.9	2.97	.038	4	1,512	do.	288	2,950	2,855	.0399	.843	.0436	.0325	4,720	.625	.508
CT68-1	Yellow birch	4	.010	2-0.010	0	8.0	2.96	.039	3	1,560	Buckling	158	2,980	2,884	.0387	.843	.0436	.0367	4,720	.632	.600
CT68-2	Do.	4	.010	2-0.010	0	7.9	2.96	.038	3	1,560	do.	162	3,060	2,884	.0408	.843	.0436	.0367	4,720	.648	.582
CT68-3	Do.	4	.010	2-0.010	0	7.6	2.96	.038	3	1,560	do.	162	3,060	2,884	.0408	.843	.0436	.0367	4,720	.648	.582
CT69-1	Yellow birch	4	.010	2-0.010	0	7.5	2.96	.039	2	1,872	Buckling	70	3,580	3,008	.0446	.843	.0436	.0406	4,720	.758	.691
CT69-2	Do.	4	.010	2-0.010	0	7.6	2.96	.039	2	1,224	do.	70	2,340	3,008	.0292	.843	.0436	.0406	4,720	.496	.688
CT69-3	Do.	4	.010	2-0.010	0	8.1	2.96	.039	2	1,956	do.	70	3,740	3,008	.0466	.843	.0436	.0406	4,720	.792	.691
CT70-1	Yellow birch	4	.010	2-0.010	0	8.0	2.98	.039	1	2,370	Shearing	18	4,470	2,860	.0589	.843	.0436	.....	.....	.....	.....
CT70-2	Do.	4	.010	2-0.010	0	8.0	2.96	.039	1	2,400	do.	18	4,590	2,860	.0601	.843	.0436	.....	.....	.....	.....
CT70-3	Do.	4	.010	2-0.010	0	7.9	2.97	.039	1	2,292	do.	18	4,360	2,860	.0573	.843	.0436	.....	.....	.....	.....
CT71-1	Yellow birch	4	.010	2-0.010	0	.....	2.97	.039	0.5	2,448	Shearing	4	4,650	3,034	.0576	.843	.0436	.....	.....	.....	.....
CT71-2	Do.	4	.010	2-0.010	0	.....	2.96	.039	.5	2,532	do.	4	4,840	3,034	.0598	.843	.0436	.....	.....	.....	.....
CT72-1	Yellow birch	4	.010	2-0.010	+45	8.4	2.96	.039	5	1,398	Buckling and breaking	440	2,680	2,128	.0472	.843	.0436	.0355	7,050	.380	.286
CT72-2	Do.	4	.010	2-0.010	+45	8.2	2.96	.038	5	1,476	do.	450	2,900	2,128	.0524	.843	.0436	.0353	7,050	.411	.277
CT72-3	Do.	4	.010	2-0.010	+45	8.6	2.96	.039	5	1,404	do.	440	2,690	2,128	.0474	.843	.0436	.0355	7,050	.382	.286
CT73-1	Yellow birch	4	.010	2-0.010	+45	7.7	2.96	.039	4	1,680	Buckling and breaking	281	3,220	2,046	.0590	.843	.0436	.0408	7,050	.457	.316
CT73-2	Do.	4	.010	2-0.010	+45	9.4	2.96	.039	4	1,620	do.	281	3,100	2,046	.0568	.843	.0436	.0408	7,050	.439	.316
CT73-3	Do.	4	.010	2-0.010	+45	7.9	2.96	.038	4	1,590	Breaking	288	3,120	2,046	.0586	.843	.0436	.0407	7,050	.442	.308
CT74-1	Yellow birch	4	.010	2-0.010	+45	7.7	2.96	.038	3	1,710	Breaking	162	3,360	2,110	.0612	.843	.0436	.0478	7,050	.476	.372
CT74-2	Do.	4	.010	2-0.010	+45	7.9	2.95	.038	3	1,650	Buckling and breaking	162	3,250	2,110	.0590	.843	.0436	.0478	7,050	.461	.374
CT74-3	Do.	4	.010	2-0.010	+45	9.4	2.96	.038	3	1,686	Breaking	162	3,310	2,110	.0604	.843	.0436	.0478	7,050	.470	.372
CT75-1	Yellow birch	4	.010	2-0.010	+45	8.1	2.96	.039	2	1,932	Buckling	70	3,700	2,037	.0680	.843	.0436	.0567	7,050	.525	.438
CT75-2	Do.	4	.010	2-0.010	+45	8.8	2.96	.038	2	1,992	Buckling and breaking	72	3,910	2,037	.0738	.843	.0436	.0567	7,050	.554	.427
CT75-3	Do.	4	.010	2-0.010	+45	7.1	2.96	.039	2	2,124	do.	70	4,060	2,037	.0746	.843	.0436	.0567	7,050	.576	.438
CT76-1	Yellow birch	4	.010	2-0.010	+45	.....	2.96	.038	1	2,184	Shearing	18	4,290	2,085	.0792	.843	.0436	.....	.....	.....	.....
CT76-2	Do.	4	.010	2-0.010	+45	.....	2.96	.039	1	2,322	do.	18	4,440	2,085	.0798	.843	.0436	.....	.....	.....	.....
CT76-3	Do.	4	.010	2-0.010	+45	.....	2.96	.038	1	2,250	do.	18	4,420	2,085	.0816	.843	.0436	.....	.....	.....	.....

(continued)

Z M 61602 F

Table 4.—(continued)

Specimen number	Species	Flywood: Number of plies	Flywood: Nominal ply thickness F	Flywood: Nominal ply thickness C	Flywood: θ	Moisture content	Outside diameter (2r + h)	Plywood thickness (h)	Length (b)	Failing torque	Failure	$J = \frac{b^2}{rh}$	Maximum shearing stress τ	Modulus of elasticity E_L	k_{test}	$\frac{E_1}{E_1 + E_2}$	$\frac{\mu_{LT}}{E_L}$	$k_{theoretical}$ [1]	Shearing strength f_s	τ_{test} / f_s	$\tau_{theoretical}$ / f_s
(1)	(2)	(3)	(4)	(5)	(6)	(7)	(8)	(9)	(10)	(11)	(12)	(13)	(14)	(15)	(16)	(17)	(18)	(19)	(20)	(21)	(22)
			Inch	Inch	Degrees	Percent	Inches	Inch	Inches	Inch-pounds			Pounds per square inch	1,000 pounds per square inch					Pounds per square inch		
CT77-1	Yellow birch	4	0.010	2-0.010	45	.....	2.96	0.039	0.5	3,384	Shearing	4	6,480	2,220	0.1094	0.843	0.0436	.....	.....	.....	.....
CT77-2	Do.	4	.010	2-0.010	45	.....	2.96	.038	.5	2,952	do.	4	5,800	2,220	.1005	.843	.0436	.....	.....	.....	.....
CT77-3	Do.	4	.010	2-0.010	45	.....	2.95	.039	.5	3,468	do.	4	6,670	2,220	.1122	.843	.0436	.....	.....	.....	.....
CT78-1	Yellow birch	4	.010	2-0.010	45	8.0	2.96	.038	5	1,968	Buckling and breaking	451	3,860	2,154	.0688	.843	.0436	0.0717	7,050	0.547	0.571
CT78-2	Do.	4	.010	2-0.010	45	7.5	2.96	.038	5	2,022	Breaking	451	3,970	2,154	.0708	.843	.0436	.0717	7,050	.564	.570
CT78-3	Do.	4	.010	2-0.010	45	8.1	2.96	.038	5	2,154	do.	451	4,230	2,154	.0754	.843	.0436	.0717	7,050	.600	.571
CT79-1	Yellow birch	4	.010	2-0.010	45	8.0	2.96	.038	4	1,884	Breaking	288	3,700	2,358	.0604	.843	.0436	.0870	7,050	.525	.756
CT79-2	Do.	4	.010	2-0.010	45	9.1	2.96	.039	4	2,088	do.	281	4,000	2,358	.0636	.843	.0436	.0877	7,050	.568	.783
CT79-3	Do.	4	.010	2-0.010	45	8.5	2.96	.039	4	2,124	do.	281	4,060	2,358	.0644	.843	.0436	.0877	7,050	.576	.785
CT80-1	Yellow birch	4	.010	2-0.010	45	8.5	2.96	.038	3	2,250	Breaking	162	4,420	2,307	.0737	.843	.0436	.1106	7,050	.627	.942
CT80-2	Do.	4	.010	2-0.010	45	8.5	2.96	.038	3	2,460	Buckling and breaking	162	4,830	2,307	.0806	.843	.0436	.1106	7,050	.684	.940
CT80-3	Do.	4	.010	2-0.010	45	8.0	2.96	.037	3	2,346	Breaking	167	4,730	2,307	.0810	.843	.0436	.1098	7,050	.672	.910
CT81-1	Yellow birch	4	.010	2-0.010	45	.....	2.96	.037	2	2,394	Breaking	74	4,820	2,335	.0816	.843	.0436	.....	7,050	.683	.....
CT81-2	Do.	4	.010	2-0.010	45	.....	2.96	.035	2	2,178	do.	78	4,640	2,335	.0830	.843	.0436	.....	7,050	.658	.....
CT81-3	Do.	4	.010	2-0.010	45	.....	2.96	.037	2	2,136	do.	74	4,300	2,335	.0728	.843	.0436	.....	7,050	.609	.....
CT82-1	Yellow birch	4	.010	2-0.010	45	.....	2.96	.038	1	2,736	Breaking	.....	5,370	2,112	.0978	.843	.0436	.....	.....	.....	.....
CT82-2	Do.	4	.010	2-0.010	45	.....	2.96	.038	1	2,778	Buckling and breaking	.....	5,450	2,112	.0992	.843	.0436	.....	.....	.....	.....
CT82-3	Do.	4	.010	2-0.010	45	.....	2.96	.038	1	2,664	Breaking	.....	5,230	2,112	.0952	.843	.0436	.....	.....	.....	.....
CT83-1	Yellow birch	4	.010	2-0.010	45	.....	2.95	.038	0.5	3,492	Breaking	.....	6,900	2,210	.1196	.843	.0436	.....	.....	.....	.....
CT83-2	Do.	4	.010	2-0.010	45	.....	2.96	.038	.5	3,576	Buckling and breaking	.....	7,020	2,210	.1222	.843	.0436	.....	.....	.....	.....
CT83-3	Do.	4	.010	2-0.010	45	.....	2.96	.037	.5	3,372	Breaking	.....	6,790	2,210	.1214	.843	.0436	.....	.....	.....	.....
CT84-1	Yellow birch	4	.010	2-0.010	0	.....	2.96	.038	0.125	2,568	Shearing	.....	5,040	2,968	.0654	.843	.0436	.....	.....	.....	.....
CT84-2	Do.	4	.010	2-0.010	0	.....	2.96	.038	.125	2,520	do.	.....	4,950	2,968	.0641	.843	.0436	.....	.....	.....	.....
CT84-3	Do.	4	.010	2-0.010	0	.....	2.96	.038	.125	1,980	do.	.....	3,890	2,968	.0504	.843	.0436	.....	.....	.....	.....
CT85-1	Yellow birch	4	.010	2-0.010	90	.....	2.96	.038	.125	2,580	Shearing	.....	5,060	2,955	.0658	.843	.0436	.....	.....	.....	.....
CT85-2	Do.	4	.010	2-0.010	90	.....	2.96	.038	.125	2,394	do.	.....	4,700	2,955	.0611	.843	.0436	.....	.....	.....	.....
CT85-3	Do.	4	.010	2-0.010	90	.....	2.96	.038	.125	2,376	do.	.....	4,660	2,955	.0606	.843	.0436	.....	.....	.....	.....
CT86-1	Yellow birch	4	.010	2-0.010	45	.....	2.96	.038	.125	5,526	Shearing	.....	10,850	2,758	.1513	.843	.0436	.....	.....	.....	.....
CT87-1	Yellow birch	4	.010	2-0.010	45	.....	2.96	.038	.125	5,232	Shearing	.....	10,260	2,915	.1354	.843	.0436	.....	.....	.....	.....
CT87-2	Do.	4	.010	2-0.010	45	.....	2.96	.038	.125	4,956	do.	.....	9,720	2,915	.1281	.843	.0436	.....	.....	.....	.....

[1] Values of $k_{theoretical}$ were not determined for specimens having values of J less than 50.

Table 5.—Results of tests on minor specimens

Corresponding cylinder specimen number	Bending: Bending parallel to face grain: E_1	Bending parallel to face grain: Moisture content	Bending parallel to face grain: Specific gravity	Bending: Bending perpendicular to face grain: E_2	Bending perpendicular to face grain: Moisture content	Bending perpendicular to face grain: Specific gravity	Compression: Compression parallel to face grain: E_a	Compression parallel to face grain: Proportional limit stress	Compression parallel to face grain: Moisture content	Compression parallel to face grain: Specific gravity	Compression: Compression perpendicular to face grain: E_b	Compression perpendicular to face grain: Proportional limit stress	Compression perpendicular to face grain: Moisture content	Compression perpendicular to face grain: Specific gravity	Tension: Tension parallel to face grain: E_a	Tension parallel to face grain: Moisture content	Tension parallel to face grain: Specific gravity	Tension: Tension perpendicular to face grain: E_b	Tension perpendicular to face grain: Moisture content	Tension perpendicular to face grain: Specific gravity
(1)	(2)	(3)	(4)	(5)	(6)	(7)	(8)	(9)	(10)	(11)	(12)	(13)	(14)	(15)	(16)	(17)	(18)	(19)	(20)	(21)
	1,000 psi.	Percent		1,000 psi.	Percent		1,000 psi.	Psi.	Percent		1,000 psi.	Psi.	Percent		1,000 psi.	Percent		1,000 psi.	Percent	
CT-1	2,550	3.5	0.60	266	3.4	0.57	1,850	.....	3.6	0.60	1,116	.....	3.8	0.58	1,873	4.1	0.56	1,107	3.7	0.56
	2,570	3.7	.57	239	3.3	.56	1,837	.....	3.6	.60	1,144	.....	3.9	.57	1,740	3.5	.54	1,185	3.3	.57
CT-2	2,461	3.8	.59	246	4.1	.54	1,812	.....	3.8	.59	1,069	.....	3.9	.55	1,624	3.6	.56	991	4.1	.52
	2,324	3.4	.59	249	3.5	.53	1,586	.....	3.6	.58	1,001	.....	3.9	.52	1,595	4.3	.54	948	4.3	.52
CT-3	1,223	6.8	.55	205	3.9	.56	1,655	.....	3.9	.56	1,007	.....	3.9	.56	1,804	4.2	.57	920	4.7	.54
	2,410	4.0	.57	200	3.9	.56	1,650	.....	3.8	.56	1,041	.....	3.6	.56	1,754	4.6	.56	903	4.5	.55
CT-4	2,297	3.7	.54	254	3.6	.56	1,750	.....	3.2	.55	1,138	.....	3.4	.57	1,744	4.3	.54	943	4.0	.54
	2,806	3.5	.54	243	3.8	.55	1,803	.....	3.0	.57	1,096	.....	3.7	.56	1,789	4.2	.55	960	4.0	.54
CT-5	2,409	3.6	.54	215	4.2	.52	1,655	.....	3.9	.52	1,045	.....	4.5	.56	1,806	4.5	.55	852	4.7	.53
	2,331	3.9	.54	220	3.6	.53	1,677	.....	3.8	.53	956	.....	4.1	.53	1,775	4.6	.54	926	4.7	.54
CT-6	2,260	3.8	.54	221	3.4	.55	1,749	.....	4.0	.51	995	.....	3.1	.55	1,716	4.2	.53	967	4.3	.55
	2,325	3.8	.54	211	3.7	.54	1,686	.....	4.5	.52	922	.....	4.5	.54	1,788	4.2	.54	866	4.8	.55
CT-7	2,150	4.1	.55	221	3.3	.55	1,996	.....	4.4	.59	958	.....	4.8	.53	2,000	4.7	.56	833	4.3	.55
	2,476	4.2	.56	200	3.7	.56	1,824	.....	4.3	.56	950	.....	4.7	.59	1,916	4.6	.58	843	4.3	.53
CT-8	2,300	3.8	.56	254	3.7	.56	1,850	.....	4.9	.56	932	.....	4.5	.54	1,926	4.4	.57	1,030	4.3	.58
	2,593	4.0	.56	234	3.6	.54	1,885	.....	4.5	.59	920	.....	4.7	.54	1,966	4.7	.60	912	4.4	.56
CT-9	2,046	3.4	.55	244	3.0	.62	1,677	.....	3.5	.58	1,023	.....	3.7	.60	1,516	3.9	.58	1,074	3.6	.70
	1,975	3.2	.58	261	3.2	.61	1,656	.....	3.5	.56	1,025	.....	3.5	.62	1,567	3.9	.57	1,006	3.6	.66
CT-10	1,944	2.7	.61	244	3.3	.58	930	.....	4.2	.57	896	.....	4.0	.57	1,770	3.3	.64	964	3.0	.59
	1,780	2.9	.59	245	3.4	.56	1,64[illegible]	.....	4.2	.58	858	.....	4.3	.55	1,805	3.2	.61	941	3.4	.60
CT-11	2,060	3.[illegible]	.53	220	3.6	.54	1,420	.....	3.8	.54	1,058	.....	4.3	.60	1,489	3.8	.53	967	3.7	.57
	1,708	3.0	.53	175	3.3	.50	1,634	.....	4.2	.56	931	.....	3.8	.57	1,280	3.8	.49	958	3.8	.57
CT-12	2,250	3.1	.57	236	3.4	.56	1,802	.....	4.2	.60	1,052	.....	3.9	.60	1,712	3.6	.55	828	3.7	.57
	2,187	3.0	.56	241	3.3	.57	1,694	.....	4.0	.61	873	.....	4.0	.57	1,562	3.6	.52	878	3.3	.60
CT-13	2,094	4.1	.58	303	3.5	.61	1,850	.....	4.2	.61	1,054	.....	3.8	.61	1,749	3.5	.60	911	3.4	.62
	2,407	3.9	.61	243	3.3	.59	1,830	.....	4.4	.62	1,112	.....	4.2	.63	1,800	3.6	.64	997	3.7	.62
CT-14	2,065	3.8	.57	277	2.9	.59	1,945	.....	4.3	.60	1,101	.....	4.2	.59	2,052	3.6	.63	1,015	3.8	.63
	2,166	3.7	.58	262	3.0	.60	2,020	.....	4.3	.61	1,070	.....	4.0	.60	1,836	3.7	.61	1,049	3.7	.61
CT-15	1,974	3.8	.53	201	2.7	.55	1,794	.....	4.2	.58	869	.....	3.8	.59	1,548	3.9	.54	846	3.5	.57
	1,954	3.8	.53	232	2.7	.55	1,842	.....	3.2	.59	875	.....	3.6	.56	1,659	3.5	.55	715	3.7	.56
CT-16	1,970	3.8	.59	249	2.8	.60	1,568	.....	3.4	.59	950	.....	3.5	.60	1,776	3.9	.58	876	3.9	.58
	2,126	3.4	.59	232	2.9	.59	1,642	.....	3.6	.58	889	.....	3.6	.60	1,726	4.0	.57	859	3.8	.59
CT-20	1,453	3.5	.41	388	3.2	.40	678	3,510	3.3	.39	964	2,380	4.2	.39	965	3.4	.41	1,218	3.5	.40
	1,459	3.2	.40	380	3.2	.42	847	3,270	3.3	.39	792	2,910	3.5	.37	1,056	3.1	.41	1,362	3.6	.41
	1,394	3.1	.37	361	3.5	.40	750	2,400	3.3	.36	862	3,210	3.5	.40	1,078	3.1	.40	1,398	3.6	.42
	1,607	3.1	.38	380	3.3	.39	887	3,270	3.4	.42	.....	.....	.....	.....	808	4.2	.40	1,107	3.7	.40
	1,604	3.4	.38	393	3.4	.41	914	3,560	3.4	.39	941	.....	3.4	.38	856	3.4	.39	1,092	4.2	.42
	1,486	3.3	.38	305	3.6	.40	1,082	3,720	3.5	.41	974	2,780	.....	.....	830	.....	.....	934	4.1	.40
CT-21	1,500	3.2	.37	373	3.6	.39	606	3,440	3.2	.39	936	3,650	2.9	.39	1,125	.....	.....	1,106	3.5	.42
	1,436	3.3	.37	383	3.7	.41	752	3,130	3.1	.36	804	3,780	3.5	.40	1,146	.....	.....	1,108	3.7	.40
	1,500	3.0	.39	407	3.7	.42	928	2,340	3.2	.38	1,156	4,130	3.5	.41	1,170	.....	.....	1,165	3.7	.42
	1,486	3.3	.38	360	3.5	.37	951	2,880	3.2	.39	1,068	3,660	3.6	.38	1,026	4.0	.41	974	3.3	.37
	1,615	3.5	.39	389	3.4	.39	1,058	2,930	3.2	.40	1,050	3,990	3.6	.38	1,158	4.1	.41	968	3.5	.37
	1,690	3.2	.40	385	3.5	.39	1,103	.....	3.2	.41	980	3,120	3.5	.39	984	4.1	.39	1,036	2.9	.39

(continued)

Table 5.—(continued)

Corresponding cylinder specimen number	Bending: Bending parallel to face grain: E_1	Moisture content	Specific gravity	Bending: Bending perpendicular to face grain: E_2	Moisture content	Specific gravity	Compression: Compression parallel to face grain: E_a	Proportional limit stress	Moisture content	Specific gravity	Compression: Compression perpendicular to face grain: E_b	Proportional limit stress	Moisture content	Specific gravity	Tension: Tension parallel to face grain: E_a	Moisture content	Specific gravity	Tension: Tension perpendicular to face grain: E_b	Moisture content	Specific gravity
(1)	(2)	(3)	(4)	(5)	(6)	(7)	(8)	(9)	(10)	(11)	(12)	(13)	(14)	(15)	(16)	(17)	(18)	(19)	(20)	(21)
	1,000 psi.	Percent		1,000 psi.	Percent		1,000 psi.	Psi.	Percent		1,000 psi.	Psi.	Percent		1,000 psi.	Percent		1,000 psi.	Percent	
CT-22	1,518	3.4	0.39	350	3.2	0.37	962	2,660	3.3	0.42	950	2,610	3.7	0.39	890	4.1	0.37	1,076	3.3	0.41
	1,478	3.3	.39	378	3.2	.38	926	2,770	3.3	.40	879	2,900	3.7	.38	910	3.7	.38	1,034	2.6	.40
	1,710	3.5	.41	362	3.2	.38	866	2,510	3.4	.38	768	2,140	3.7	.39	860	3.9	.38	1,040	2.9	.37
	1,634	3.3	.40	355	3.2	.39	822	2,980	3.6	.36	780	3,360	3.5	.38	918	3.8	.38	1,030	2.6	.38
	1,977	3.6	.41	350	3.3	.37	961	2,320	3.6	.37	882	3,480	3.2	.38	932	3.6	.37	1,044	3.0	.38
	1,522	3.5	.39	300	3.4	.35	996	3,550	3.6	.40	960	3,700	3.5	.38	864	3.7	.37	1,068	3.2	.37
CT-23	1,954	3.7	.45	520	3.4	.46	1,176	3,510	3.4	.45	1,117	3,320	3.4	.43	994	4.0	.42	1,192	3.1	.42
	2,228	3.1	.48	500	3.6	.48	1,097	3,280	3.2	.45	1,205	4,370	3.5	.43	957	4.2	.40	1,238	2.7	.45
	1,495	3.5	.43	467	3.7	.45	949	3,510	3.4	.43	598	3,800	3.4	.39	878	3.6	.39	1,329	3.1	.43
	1,369	3.3	.42	454	3.6	.42	1,009	2,570	3.2	.43	1,336	4,800	3.3	.43	1,239	3.6	.44	1,144	2.5	.41
	1,422	3.5	.41	446	3.5	.44	1,006	2,810	3.1	.42	1,245	4,790	3.4	.45	1,319	4.1	.46	1,141	3.0	.41
	1,675	3.6	.42	466	3.4	.42	1,015	2,920	3.2	.43	1,302	3,600	3.6	.42	1,274	4.3	.47	1,538	3.1	.46
CT-24	1,022	3.7	.38	355	3.4	.37	720	2,410	3.4	.40	993	3,550	3.2	.38	640	4.4	.37	1,014	3.0	.39
	977	3.6	.38	332	3.4	.36	608	2,420	3.4	.40	932	3,170	3.7	.39	612	4.2	.38	1,025	3.3	.39
	1,313	3.2	.41	319	3.7	.37	684	2,560	3.2	.40	1,022	3,700	3.4	.38	562	4.3	.38	1,123	2.8	.40
	1,278	3.4	.41	318	3.9	.37	692	2,180	3.4	.38	934	.....	3.2	.40	658	5.3	.38	922	3.1	.38
	838	3.5	.38	320	3.8	.39	514	1,820	3.5	.37	915	3,020	3.4	.40	762	4.5	.40	886	3.1	.37
	842	3.3	.38	320	3.8	.37	575	2,110	3.5	.37	551	3,200	3.4	.38	808	4.7	.40	756	3.1	.37
CT-25	1,282	3.4	.41	350	3.6	.35	696	2,160	3.3	.42	944	3,870	3.5	.39	477	4.1	.35	930	3.5	.39
	1,170	3.6	.40	324	3.4	.35	688	2,460	5.0	.39	900	3,670	3.4	.39	388	4.3	.34	1,006	2.8	.39
	1,258	3.3	.39	362	3.5	.36	846	3,000	3.5	.40	958	2,490	3.6	.40	497	4.3	.37	921	4.3	.37
	1,029	3.2	.36	318	3.5	.35	863	2,560	3.4	.40	828	3,160	3.5	.37	670	4.4	.41	970	3.8	.36
	745	3.0	.34	300	3.6	.35	416	1,510	6.1	.34	812	3,100	3.6	.36	617	4.5	.40	848	3.5	.35
	780	3.6	.35	318	3.5	.35	459	1,860	3.4	.37	728	3,000	3.6	.36	704	4.4	.40	898	4.0	.36
CT-26	886	3.7	.39	325	3.6	.39	624	2,260	4.0	.39	1,046	.....	4.0	.39	624	4.3	.36	1,174	4.0	.40
	1,102	4.1	.39	275	3.7	.38	640	2,050	3.9	.40	918	3,720	3.9	.37	828	4.5	.37	979	3.8	.38
	1,070	3.9	.40	378	3.7	.40	670	2,010	3.8	.39	959	2,970	3.7	.38	807	4.6	.38	1,109	3.8	.40
	940	3.8	.40	320	3.6	.38	624	2,460	3.8	.39	958	3,260	3.7	.38	643	4.2	.39	982	.....	.....
	1,213	4.1	.39	334	3.6	.38	614	2,060	3.8	.37	998	3,720	3.9	.38	609	4.3	.40	1,054	4.0	.40
	1,066	4.0	.38	316	3.5	.37	648	1,960	3.9	.38	.....	.....	.....	.....	674	4.4	.38	1,101	4.0	.40
CT-27	1,104	3.7	.42	360	3.7	.44	750	2,060	3.6	.43	774	2,140	7.3	.35	.....	.....	.....	859	4.0	.39
	930	3.7	.41	349	3.7	.44	752	2,300	3.6	.44	898	2,900	7.6	.39	644	3.6	.42	847	3.8	.39
	1,076	3.9	.40	332	3.8	.44	724	2,010	3.6	.41	1,222	3,300	3.7	.42	666	3.8	.42	884	3.0	.41
	1,056	3.5	.42	339	4.0	.42	696	2,070	3.5	.39	905	3,120	3.5	.40	771	4.2	.43	864	3.5	.43
	1,049	3.7	.42	338	3.6	.43	670	1,840	6.4	.41	898	3,030	3.5	.40	659	3.7	.43	1,074	3.2	.44
	1,268	3.7	.43	336	3.5	.43	654	1,800	3.5	.42	913	2,420	7.3	.38	682	3.9	.40	1,290	3.6	.46
CT-28	1,486	4.7	.38	285	4.0	.38	822	2,620	3.9	.36	942	3,090	3.2	.42	888	4.5	.38	902	4.0	.46
	1,624	3.8	.39	274	4.0	.38	748	2,720	3.7	.34	792	2,610	3.3	.38	954	4.5	.39	889	3.9	.40
	1,697	3.5	.38	296	4.2	.39	892	2,410	3.8	.37	1,011	2,380	3.2	.45	1,004	4.7	.38	936	3.7	.41
	1,463	3.8	.36	243	4.0	.35	1,010	2,850	3.8	.40	556	1,930	3.6	.38	888	4.2	.40	808	4.2	.40
	1,739	3.6	.37	287	4.0	.38	878	2,710	3.6	.41	721	1,900	3.6	.40	900	4.2	.40	794	3.9	.40
	1,602	4.1	.37	263	4.0	.37	907	2,600	3.9	.38	752	2,140	3.5	.41	1,110	4.4	.40	898	3.9	.43
CT-29	1,627	3.9	.46	318	4.2	.36	924	2,970	4.5	.44	1,307	3,440	3.8	.42	838	4.6	.39	944	4.0	.40
	1,915	4.1	.48	365	4.1	.39	1,050	3,010	4.2	.44	1,264	3,440	3.9	.43	904	4.5	.39	1,087	4.0	.42
	1,674	3.6	.41	372	4.0	.39	964	3,500	4.3	.44	908	3,530	3.5	.42	956	4.6	.40	1,034	4.0	.42
	1,466	3.4	.40	362	4.2	.39	1,076	2,130	4.2	.45	810	2,850	3.4	.44	946	5.1	.44	1,100	3.9	.41
	1,470	3.8	.41	358	4.1	.38	890	3,140	4.2	.42	1,026	3,620	3.2	.43	968	4.8	.43	1,020	3.6	.41
	1,379	.....	.....	418	3.9	.41	808	2,330	4.2	.39	1,052	3,550	3.4	.42	964	5.1	.44	916	3.7	.40
CT-30	1,913	4.2	.41	376	3.8	.38	979	2,850	3.9	.44	1,096	3,150	3.4	.40	696	4.3	.38	1,114	3.7	.42
	1,748	4.0	.40	428	3.6	.39	1,051	2,850	4.0	.45	1,123	3,720	3.5	.40	748	4.5	.38	1,092	4.2	.40
	1,559	3.2	.43	440	3.7	.39	913	2,280	3.8	.42	964	2,930	3.4	.40	976	3.4	.39	1,294	4.0	.39
	.....	.....	.....	390	3.8	.38	814	2,660	4.0	.37	798	3,360	3.3	.39	986	3.4	.40	1,121	3.3	.39
	.....	.....	.....	423	3.8	.38	716	1,910	3.6	.37	924	2,020	3.1	.40	994	3.4	.41	1,136	3.6	.39
	1,226	3.4	.38	422	3.7	.39	811	2,440	3.5	.38	867	3,200	3.2	.40	908	3.7	.38	913	3.8	.38
CT-31	2,023	3.4	.51	352	3.8	.39	1,068	3,130	3.7	.48	.....	.....	.....	.....	902	3.5	.38	1,145	3.5	.41
	1,790	3.4	.48	383	3.8	.38	1,191	3,040	3.7	.47	994	3,370	4.0	.42	794	3.6	.36	1,140	3.9	.40
	1,706	3.5	.43	443	3.8	.40	1,104	3,280	4.3	.45	.....	.....	.....	.....	824	3.6	.37	904	3.5	.37
	1,580	3.1	.43	498	3.7	.45	1,070	3,350	4.2	.43	1,145	3,820	4.1	.45	1,168	3.3	.46	1,260	3.6	.42
	1,697	3.5	.43	546	3.6	.43	948	2,720	4.0	.39	1,098	3,140	4.1	.44	1,184	3.2	.44	1,173	4.0	.42
	1,681	4.0	.44	508	3.7	.44	935	2,710	3.9	.40	1,328	3,510	4.1	.46	1,169	3.4	.44	1,152	3.4	.43

(continued)

Table 5.--(continued)

Corresponding cylinder specimen number	Bending: Bending parallel to face grain: E_1	Bending parallel: Moisture content	Bending parallel: Specific gravity	Bending: Bending perpendicular to face grain: E_2	Bending perpendicular: Moisture content	Bending perpendicular: Specific gravity	Compression: Compression parallel to face grain: E_a	Compression parallel: Proportional limit stress	Compression parallel: Moisture content	Compression parallel: Specific gravity	Compression: Compression perpendicular to face grain: E_b	Compression perpendicular: Proportional limit stress	Compression perpendicular: Moisture content	Compression perpendicular: Specific gravity	Tension: Tension parallel to face grain: E_a	Tension parallel: Moisture content	Tension parallel: Specific gravity	Tension: Tension perpendicular to face grain: E_b	Tension perpendicular: Moisture content	Tension perpendicular: Specific gravity
(1)	(2)	(3)	(4)	(5)	(6)	(7)	(8)	(9)	(10)	(11)	(12)	(13)	(14)	(15)	(16)	(17)	(18)	(19)	(20)	(21)
	1,000 psi.	Percent		1,000 psi.	Percent		1,000 psi.	Psi.	Percent		1,000 psi.	Psi.	Percent		1,000 psi.	Percent		1,000 psi.	Percent	
CT-32	1,265	3.4	0.38	345	3.4	0.40	798	2,250	3.6	0.37	1,027	2,720	6.7	0.41	1,054	2.9	0.42	700	3.3	0.41
	1,289	3.4	.38	377	3.3	.42	834	2,460	4.0	.38	894	2,890	7.1	.38	1,033	3.5	.40	1,090	3.4	.40
	1,590	3.4	.40	404	3.4	.42	820	2,250	4.0	.39	860	2,670	3.7	.38	972	4.0	.41	1,108	3.6	.40
	1,736	3.5	.41	354	3.3	.39	784	2,570	4.1	.38	832	3,010	6.8	.38	883	3.2	.37	789	3.4	.40
	1,494	3.3	.39	316	3.4	.39	936	3,060	4.0	.43	849	3,020	3.8	.42	855	3.4	.37	764	3.4	.39
				382	3.4	.40	844	3,130	5.0	.42	924		3.7	.42	888	3.6	.38	826	3.5	.40
CT-33	1,568	2.6	.40	444	3.4	.43	822	2,840	3.6	.39	1,110	3,620	4.0	.45	984	3.2	.41	1,029	3.5	.42
	1,736	3.0	.43	434	3.5	.41	919	2,450	3.7	.41	1,148	2,550	4.0	.44	1,143	3.3	.42	1,012	3.1	.42
	1,773	3.2	.42	448	3.4	.42	946	2,910	3.9	.41	1,225	3,370	4.0	.44	1,038	3.1	.42	1,124	3.2	.41
	1,496	3.1	.41	415	3.3	.42	930	2,190	5.4	.42	1,204	4,100	3.7	.41	900	3.6	.41	872	3.0	.40
	1,896	3.0	.42	468	3.3	.45	600	3,080	3.8	.45	958	3,070	7.1	.39	980	3.4	.41	953	3.4	.41
	1,732	2.9	.42	410	3.4	.42	864	2,600	3.7	.45	946	3,260	3.9	.42	1,114	3.3	.43	1,053	3.4	.41
CT-34	1,552	3.9	.44	356	3.2	.41	840	2,350	3.9	.36					918	3.3	.41	857	3.4	.43
	1,514	3.8	.41	350	3.2	.42	790	2,240	3.8	.37	895	3,330	4.0	.41	1,040	3.6	.40	884	3.1	.40
	1,604	3.1	.38	320	3.2	.40	820	2,620	3.6	.36	881	3,060	7.1	.41	1,118	3.8	.41	910	4.1	.41
	1,484	3.1	.38	370	3.3	.40	691	2,970	3.5	.40	890	3,210	3.9	.40	854	3.5	.38	824	3.4	.41
	1,408	3.5	.37	381	3.2	.42	1,034	3,060	3.7	.42	924	3,130	4.0	.41	827	3.6	.38	1,079	3.4	.42
	1,613	3.5	.39	366	3.2	.40	1,006	3,060	3.6	.42	1,010	2,750	4.0	.40	842	3.4	.39	896	4.2	.40
CT-35	1,369	3.3	.36	280	3.5	.37	812	2,730	3.8	.35	534	1,790	3.1	.34	898	3.2	.36	582	3.4	.36
	1,452	3.1	.38	296	3.2	.38	956	2,740	3.5	.37	578	2,050	3.0	.35	1,098	3.4	.38	598	3.4	.36
	1,434	3.1	.36	303	3.3	.39	846	2,910	3.6	.37	520	2,030	2.8	.33	1,144	3.3	.37	551	3.7	.36
	1,985	3.0	.39	296	3.3	.37	846	3,000	3.7	.34	728	2,710	3.0	.38	871	3.4	.35	648	3.2	.37
	1,324	3.1	.35	303	3.4	.38	780	3,120	3.2	.34	772	2,640	3.1	.38	934	2.9	.35	628	3.5	.39
	1,440	3.1	.35	278	3.3	.37					835	2,370	3.1	.39	950	3.5	.35	889	3.2	.41
CT-36	2,497	8.5	.55	487	8.7	.60	1,198	3,710	8.2	.59	1,587	4,380	8.0	.63	1,509	8.2	.64	1,298	8.2	.62
	1,970	8.6	.54	417	8.6	.57	1,258	3,710	8.3	.59	1,621	4,620	7.7	.64	1,484	8.1	.64	1,326	8.4	.60
	2,428	7.9	.63	416	9.0	.56	1,375	3,250	8.1	.60	1,649	4,860	8.0	.63	1,479	8.0	.65	1,410	7.8	.63
	2,361	8.3	.62	442	8.6	.57	1,470	4,640	8.3	.63	1,483	4,100	8.5	.58	1,366	8.2	.62	1,422	8.4	.57
	2,521	8.4	.60	426	8.7	.57	1,428	4,520	8.3	.61	1,538		8.2	.58	1,352	7.8	.60	1,453	8.7	.57
	2,510	8.3	.61	449	8.7	.57	1,501	4,880	8.1	.62	1,428	4,340	8.5	.55	1,384	8.1	.61	1,325	8.8	.54
CT-37	2,212	8.0	.63	433	8.3	.60	1,450	4,740	7.8	.60	1,460	4,040	8.2	.60	1,268	8.2	.61	1,412	8.2	.59
	2,079	8.1	.62	472	7.9	.64	1,368	4,140	8.1	.62	1,426	4,290	8.3	.59	1,389	7.7	.63	1,398	8.3	.59
	2,111	8.0	.61	422	8.2	.61	1,489	4,880	8.2	.62	1,476	4,150	8.4	.62	1,318	8.5	.62	1,388	8.3	.60
	2,135	8.1	.61	396	8.4	.58	1,595	4,990	8.0	.64	1,579	5,130	8.2	.61	1,372	8.1	.61	1,402	8.2	.62
	2,171	7.8	.62	490	8.4	.63	1,424	4,060	8.6	.60	1,564	5,120			1,347	8.1	.59	1,344	8.6	.57
	2,106	7.8	.61	418	8.5	.60	1,477	3,650	8.3	.61	1,516	4,170	8.1	.61	1,428	8.1	.62	1,363	8.2	.61
CT-38-39	2,306	8.5	.61	419	8.4	.59	1,441	4,060	8.2	.60	1,364	4,230	8.4	.57	1,214	8.1	.59	1,428	8.4	.58
	2,382	8.5	.61	438	8.5	.61	1,496	4,500	7.8	.61	1,402	3,560	8.6	.56	1,260	8.2	.57	1,370	8.4	.56
	2,096	8.5	.58	455	8.4	.60	1,402	4,670	8.4	.60	1,332	3,780	8.5	.57	1,429	8.4	.59	1,339	8.3	.58
	1,990	8.4	.57	455	8.6	.59	1,346	4,560	8.3	.58	1,594	3,350	8.5	.61	1,322	8.2	.56	1,412	8.2	.59
	2,170	8.4	.58	433	8.7	.59	1,359	4,090	8.2	.57	1,590	4,290	8.4	.61	1,248	8.1	.55	1,429	8.3	.60
	2,148	8.0	.58	384	8.5	.57	1,341	3,420	8.1	.57	1,413	3,890	8.3	.57	1,360	7.8	.60	1,444	8.2	.60
CT-40	2,186	8.3	.64	407	8.5	.58	1,478	4,260	8.2	.64	1,506	4,500	8.4	.60	1,256	8.7	.57	1,420	8.8	.60
	2,488	8.4	.63	399	8.5	.58	1,418	4,150	8.6	.62	1,453	4,390	8.5	.58	1,326	8.4	.59	1,327	8.4	.57
	2,258	8.2	.59	422	8.5	.61	1,295	3,950	8.4	.59	1,548	3,700	8.4	.59	1,330	8.4	.60	1,317	8.3	.56
	2,386	8.2	.60	429	8.7	.56	1,459	4,280	8.0	.62	1,538	4,520	8.2	.60	1,364	8.7	.60	1,344	8.5	.58
	2,298	8.1	.59	424	8.5	.57	1,380	4,310	8.3	.58	1,184	3,550	8.2	.60	1,336	8.2	.60	1,436	8.5	.59
	1,946	8.1	.56	427	8.3	.59	1,367	4,090	8.2	.57	1,576	4,620	8.2	.61	1,388	8.4	.59	1,472	8.4	.60
CT-41	2,449	8.1	.62	418	8.4	.60	1,554	4,410	8.4	.62	1,438	1,900	8.9	.60	1,300	8.2	.59	1,352	8.3	.60
	2,422	8.2	.62	414	8.3	.60	1,483	4,670	8.2	.62	1,408	5,090	8.6	.58	1,279	8.2	.59	1,370	8.5	.61
	2,118	8.3	.59	425	8.4	.58	1,230	4,310	8.4	.58	1,446	4,630	8.6	.59	1,276	8.6	.60	1,484	8.0	.61
	2,228	8.2	.59	442	8.5	.60	1,387	4,170	8.2	.60	1,436	4,500	8.8	.60	1,470	8.3	.64	1,372	8.0	.59
	2,232	8.1	.58	470	8.4	.60	1,298	3,930	8.3	.59	1,468	4,600	8.8	.60	1,447	8.4	.62	1,384	8.6	.56
	2,109	8.0	.58	466	8.3	.59	1,332	4,400	8.2	.58	1,421	4,040	8.6	.59	1,300	8.3	.60	1,371	8.3	.56
CT-42-43	2,178	8.5	.60	409	8.4	.58	1,322	4,200	8.6	.61	1,434	5,340	8.4	.62	1,274	8.1	.59	1,537	8.6	.60
				411	8.4	.58	1,376	4,440	8.7	.61	1,301	4,730	8.5	.60	1,449	8.3	.60	1,476	7.6	.61
	2,138	8.5	.57	448	8.5	.60	1,394	4,760	8.6	.60	1,400	5,100	8.7	.58	1,474	8.2	.62	1,368	7.6	.63
	2,179	8.5	.57	452	8.2	.58	1,413	4,280	8.7	.60	1,339	4,500	8.7	.59	1,499	8.2	.60	1,342	7.9	.58
	2,199	8.4	.58	420	8.5	.56	1,355	4,270	8.5	.60	1,334	4,970	8.8	.58	1,471	8.3	.59	1,416	7.8	.58
	2,267	8.3	.60	416	8.6	.57	1,370	4,510	8.5	.59	1,496	4,900	8.6	.60	1,427	8.1	.59	1,406	8.0	.59

(continued)

Table 5.—(continued)

Corresponding cylinder specimen number	Bending: Bending parallel to face grain: E_1	Bending parallel to face grain: Moisture content	Bending parallel to face grain: Specific gravity	Bending: Bending perpendicular to face grain: E_2	Bending perpendicular to face grain: Moisture content	Bending perpendicular to face grain: Specific gravity	Compression: Compression parallel to face grain: E_a	Compression parallel to face grain: Proportional limit stress	Compression parallel to face grain: Moisture content	Compression parallel to face grain: Specific gravity	Compression: Compression perpendicular to face grain: E_b	Compression perpendicular to face grain: Proportional limit stress	Compression perpendicular to face grain: Moisture content	Compression perpendicular to face grain: Specific gravity	Tension: Tension parallel to face grain: E_a	Tension parallel to face grain: Moisture content	Tension parallel to face grain: Specific gravity	Tension: Tension perpendicular to face grain: E_b	Tension perpendicular to face grain: Moisture content	Tension perpendicular to face grain: Specific gravity
(1)	(2)	(3)	(4)	(5)	(6)	(7)	(8)	(9)	(10)	(11)	(12)	(13)	(14)	(15)	(16)	(17)	(18)	(19)	(20)	(21)
	1,000 psi.	Percent		1,000 psi.	Percent		1,000 psi.	Psi.	Percent		1,000 psi.	Psi.	Percent		1,000 psi.	Percent		1,000 psi.	Percent	
CT-44	1,805	7.8	0.63	636	8.3	0.60	1,332	4,430	8.3	0.60	1,077	3,230	8.1	0.58	1,341	7.8	0.61	1,232	8.1	0.59
	1,785	7.8	.63	667	8.2	.61	1,342	4,430	8.4	.60	1,136	4,260	8.2	.58	1,338	8.0	.61	1,153	7.8	.60
	1,777	7.8	.60	640	8.2	.62	1,388	4,070	8.4	.60	1,118	3,410	8.2	.58	1,404	7.8	.62	1,127	7.6	.59
	1,849	7.8	.60	825	8.3	.60	1,408	4,630	8.2	.59	1,186	4,180	8.2	.62	1,225	8.0	.58	1,192	7.6	.62
	1,766	8.0	.60	891	8.2	.62	1,266	3,700	7.8	.58	1,288	3,800	8.0	.61	1,356	7.8	.59	1,174	7.7	.62
	1,786	8.0	.61	796	8.1	.62	1,294	3,700	7.9	.58	1,260	3,280	8.2	.62	1,364	7.9	.60	1,312	8.1	.63
CT-45	1,689	8.0	.62	759	8.2	.60	1,410	4,720	7.9	.62	1,148	4,050	8.2	.59	1,334	8.0	.61	1,160	8.3	.60
	1,648	8.0	.61	830	8.2	.62	1,386	4,430	7.8	.61	667	3,700	8.1	.57	1,414	8.0	.61	1,153	7.5	.60
	1,792	8.3	.60	806	8.3	.61	1,304	4,340	7.9	.60	1,202	3,760	8.3	.59	1,432	7.9	.62	1,236	7.8	.60
	1,698	8.2	.59	778	8.4	.61	1,358	3,760	8.2	.59	1,254	3,240	8.2	.60	1,414	7.8	.60	1,142	7.5	.61
	1,632	8.2	.60	822	8.4	.60	1,316	4,270	8.1	.57	1,232	4,100	8.1	.60	1,438	8.1	.61	1,150	7.8	.60
	1,728	7.9	.60	775	8.4	.61	1,306	4,270	8.1	.58	1,214	3,220	8.0	.60	1,276	8.0	.59	1,232	7.8	.61
CT-46-47	1,750	7.6	.64	938	8.1	.64	1,484	5,190	8.0	.65	1,324	4,170	7.8	.65	1,504	8.1	.63	1,332	7.5	.62
	1,762	7.4	.64	922	8.1	.62	1,512	4,630	8.1	.65	.....	.....	8.0	.63	1,487	8.0	.63	1,358	7.6	.63
	1,869	7.7	.65	922	8.1	.63	1,465	4,540	8.0	.65	1,344	4,100	8.1	.63	1,514	7.8	.64	1,402	7.8	.62
	1,880	7.8	.64	986	8.2	.64	1,494	4,170	8.3	.64	1,298	4,830	7.9	.66	1,513	8.2	.63	1,397	7.9	.62
	1,902	8.1	.63	1,008	8.2	.62	1,392	5,360	8.0	.64	1,374	3,920	7.8	.65	1,619	7.8	.64	1,418	8.0	.61
	1,763	8.2	.63	970	8.2	.62	1,404	4,460	8.0	.63	1,366	4,170	7.8	.....	1,607	7.8	.64	1,377	8.3	.59
CT-48	1,674	8.2	.60	908	8.6	.61	1,302	3,890	7.9	.62	1,327	4,410	8.1	.61	1,436	8.1	.62	1,398	8.1	.61
	1,727	8.3	.61	911	8.6	.62	1,218	4,200	8.0	.62	1,350	4,900	8.0	.61	1,370	8.1	.62	1,316	8.3	.60
	1,747	8.2	.60	912	8.4	.62	1,284	4,050	8.2	.60	1,376	5,260	8.2	.61	1,344	7.9	.63	1,344	8.0	.61
	1,789	8.0	.60	899	8.6	.59	1,314	4,160	8.1	.62	1,219	4,050	8.2	.59	1,316	8.3	.62	1,324	8.1	.59
	1,703	8.2	.60	970	8.5	.59	1,236	4,090	8.0	.61	1,273	4,040	8.4	.60	1,389	8.1	.62	1,429	8.0	.60
	1,690	7.7	.60	940	8.4	.60	1,350	4,110	8.0	.61	1,304	4,040	8.2	.59	1,416	7.9	.63	1,416	7.5	.62
CT-49	1,765	8.1	.61	986	8.4	.62	1,322	4,050	8.2	.61	1,365	4,160	8.1	.63	1,494	8.0	.65	1,293	7.8	.65
	1,870	8.1	.60	1,030	8.4	.61	1,389	4,400	8.2	.62	1,297	4,150	8.2	.62	1,527	7.8	.64	1,384	7.7	.64
	1,848	8.2	.63	888	8.2	.62	1,365	5,280	8.0	.63	1,380	4,170	7.9	.62	1,386	8.1	.62	1,377	7.7	.64
	1,735	7.9	.62	1,006	8.3	.62	1,419	4,750	7.9	.63	1,346	5,150	8.1	.60	1,380	7.8	.62	1,392	7.9	.63
	1,749	8.3	.63	944	8.2	.60	1,405	5,360	7.9	.63	1,260	4,950	7.9	.60	1,402	8.2	.62	1,266	8.0	.63
	1,863	8.2	.63	970	8.0	.62	1,485	4,820	7.9	.65	1,280	4,350	8.1	.61	1,551	7.8	.64	1,223	7.8	.62
CT-50-51	1,594	8.0	.62	976	7.8	.63	1,442	4,320	7.6	.65	1,341	4,150	7.8	.64	1,549	7.5	.64	1,240	7.8	.62
	1,656	8.0	.61	917	7.9	.62	1,388	5,160	7.7	.64	1,320	4,750	7.8	.64	1,506	7.7	.63	1,304	7.7	.61
	1,752	8.2	.62	898	8.1	.62	1,319	4,980	7.9	.63	1,350	4,760	7.9	.64	1,538	7.4	.64	1,272	7.5	.63
	1,874	8.4	.62	920	8.1	.61	1,354	5,350	8.0	.63	1,219	4,180	8.1	.62	1,412	8.0	.63	1,377	7.5	.64
	1,827	7.9	.62	960	8.0	.61	1,378	4,440	7.8	.63	1,252	4,160	8.2	.63	1,444	7.9	.64	1,372	7.7	.62
	1,706	8.1	.62	908	8.0	.60	1,380	5,040	7.8	.....	1,272	4,200	8.0	.63	1,418	7.8	.64	1,268	8.0	.61
CT-52	1,850	8.2	.59	789	8.3	.59	1,336	4,090	7.9	.60	.....	.....	8.2	.62	1,478	7.8	.63	1,130	8.2	.61
	1,859	8.2	.59	789	8.3	.59	1,305	4,370	7.8	.59	1,230	4,090	8.1	.63	1,512	7.6	.62	1,198	8.3	.60
	1,852	8.1	.59	822	8.3	.59	1,264	4,580	8.1	.59	1,253	4,100	8.2	.63	1,578	7.4	.63	1,174	7.7	.61
	1,964	8.2	.61	805	8.2	.58	1,352	5,200	8.2	.61	1,142	4,000	8.2	.59	1,468	8.1	.63	1,265	8.0	.60
	1,844	8.6	.59	840	7.9	.59	1,363	4,980	8.0	.62	1,062	3,960	8.2	.58	1,390	7.8	.63	1,238	7.8	.60
	1,763	8.4	.59	816	8.2	.60	1,436	5,200	7.8	.61	1,072	3,590	8.1	.57	1,356	7.6	.62	1,206	8.2	.60
CT-53	1,813	8.5	.61	869	7.8	.59	1,342	4,490	8.2	.61	1,397	5,340	7.8	.63	1,389	7.8	.61	1,381	7.8	.63
	1,854	8.3	.61	868	8.0	.60	1,391	4,170	8.2	.61	1,288	4,150	8.0	.61	1,440	7.7	.60	1,320	7.8	.62
	1,906	8.5	.59	824	7.9	.59	1,306	4,630	8.1	.59	1,344	3,860	8.1	.62	1,385	7.7	.61	1,396	7.7	.62
	1,839	8.4	.60	913	8.0	.59	1,410	4,160	8.1	.60	1,256	4,050	8.2	.59	1,413	7.9	.63	1,224	8.0	.60
	1,932	8.4	.59	951	7.9	.59	1,427	5,350	8.0	.62	1,312	4,100	8.0	.61	1,390	7.8	.63	1,314	7.9	.60
	1,970	8.4	.60	940	7.9	.60	1,420	4,050	8.2	.60	1,348	4,040	7.9	.60	1,342	7.6	.62	1,392	7.4	.62
CT-54-55	1,952	8.6	.64	952	8.0	.63	1,570	4,710	8.3	.64	1,131	3,560	7.9	.61	1,445	7.9	.61	1,194	8.2	.61
	2,098	8.4	.64	946	7.8	.64	1,552	4,380	8.2	.64	1,102	3,550	7.9	.60	1,532	8.0	.63	1,243	8.3	.61
	1,826	8.2	.60	931	8.1	.64	1,422	5,470	7.8	.62	1,080	.....	7.9	.62	1,505	7.9	.62	1,142	8.2	.59
	1,814	8.4	.60	950	8.0	.62	1,330	4,590	7.9	.61	1,248	4,620	7.8	.64	1,534	7.8	.62	1,232	8.1	.62
	1,812	8.3	.60	901	8.0	.61	1,312	4,920	7.9	.60	1,224	4,740	7.8	.62	1,566	7.7	.62	1,287	8.2	.61
	1,784	8.3	.60	989	8.1	.62	1,434	4,620	7.6	.59	1,280	4,610	7.7	.64	1,438	8.4	.62	1,267	8.3	.62
CT-56	1,868	8.3	.63	784	8.2	.58	1,432	3,830	7.8	.63	1,147	4,100	8.2	.60	1,537	7.8	.60	1,376	8.1	.63
	1,902	8.6	.62	874	8.2	.58	1,513	4,880	8.0	.64	1,222	4,670	7.9	.62	1,504	8.2	.60	1,365	7.8	.61
	1,732	8.3	.61	990	8.1	.58	1,389	5,000	8.0	.63	1,173	4,450	8.0	.61	1,543	7.8	.61	1,286	7.9	.61
	1,742	8.2	.59	817	8.0	.59	1,394	5,050	7.8	.62	1,196	4,690	8.0	.62	1,482	8.0	.63	1,344	8.1	.60
	1,796	8.4	.60	915	7.8	.61	1,424	5,270	7.9	.62	1,240	4,520	7.9	.64	1,504	7.7	.63	1,316	8.2	.61
	1,850	8.2	.60	910	8.0	.60	1,422	5,050	8.0	.62	1,264	4,680	8.1	.62	1,596	7.7	.63	1,488	8.2	.61

(continued)

Table 5.—(continued)

Corresponding cylinder specimen number	Bending: Bending parallel to face grain: E_1	Bending parallel to face grain: Moisture content	Bending parallel to face grain: Specific gravity	Bending perpendicular to face grain: E_2	Bending perpendicular to face grain: Moisture content	Bending perpendicular to face grain: Specific gravity	Compression: Compression parallel to face grain: E_a	Compression parallel to face grain: Proportional limit stress	Compression parallel to face grain: Moisture content	Compression parallel to face grain: Specific gravity	Compression: Compression perpendicular to face grain: E_b	Compression perpendicular to face grain: Proportional limit stress	Compression perpendicular to face grain: Moisture content	Compression perpendicular to face grain: Specific gravity	Tension: Tension parallel to face grain: E_a	Tension parallel to face grain: Moisture content	Tension parallel to face grain: Specific gravity	Tension: Tension perpendicular to face grain: E_b	Tension perpendicular to face grain: Moisture content	Tension perpendicular to face grain: Specific gravity
(1)	(2)	(3)	(4)	(5)	(6)	(7)	(8)	(9)	(10)	(11)	(12)	(13)	(14)	(15)	(16)	(17)	(18)	(19)	(20)	(21)
	1,000 psi.	Percent		1,000 psi.	Percent		1,000 psi.	Psi.	Percent		1,000 psi.	Psi.	Percent		1,000 psi.	Percent		1,000 psi.	Percent	
CT-57	1,466	8.5	0.57	868	8.1	0.58	1,294	4,750	8.2	0.60	1,234	3,610	7.7	0.60	1,350	7.4	0.60	1,272	8.5	0.60
	1,671	8.5	.59	892	8.2	.58	1,324	4,100	7.7	.60	1,354	3,980	7.9	.61	1,296	7.6	.59	1,190	7.4	.59
	1,446	8.4	.58	832	8.0	.57	1,284	3,760	7.9	.58	1,392	3,920	7.8	.61	1,303	7.7	.59	1,179	7.8	.60
	1,473	8.7	.56	882	7.9	.59	1,356	3,920	7.9	.61	1,324	3,780	7.8	.60	1,409	7.8	.63	1,340	8.3	.59
	1,418	8.4	.58	892	7.8	.59	1,340	4,220	7.6	.61	1,290	3,740	7.9	.59	1,446	7.7	.63	1,264	7.9	.59
	1,403	8.1	.58	904	7.8	.60	1,354	3,980	7.6	.62	1,264	4,040	7.7	.59	1,394	7.8	.63	1,182	7.8	.59
CT-58-59	1,616	8.1	.65	995	7.8	.63	1,453	4,140	7.4	.66	1,389	3,920	7.6	.62	1,498	7.5	.65	1,452	8.0	.63
	1,546	8.0	.63	946	7.9	.63	1,294	4,350	7.7	.63	1,390	4,520	7.5	.62	1,599	7.8	.65	1,462	8.0	.63
	1,583	7.6	.63	963	8.1	.63	1,458	3,990	7.6	.64	1,414	4,820	7.2	.63	1,320	7.7	.64	1,461	8.1	.63
	1,764	7.7	.65	993	7.8	.63	1,464	4,300	7.5	.65	1,478	4,990	7.7	.62	1,395	7.8	.65	1,251	7.8	.63
	1,740	7.9	.63	1,020	7.9	.64	1,443	4,170	7.3	.62	1,615	4,280	7.8	.65	1,479	7.3	.65	1,242	8.2	.62
	1,685	8.0	.63	952	7.8	.63	1,403	3,930	7.4	.62	1,396	4,270	7.8	.64	1,308	7.0	.63	1,333	8.2	.63
CT-60	2,218	7.8	.63	522	7.6	.64	1,398	4,890	7.5	.64	1,520	.....	8.1	.64	1,440	7.2	.64	1,532	7.5	.64
	2,336	7.9	.63	508	7.9	.66	1,406	4,160	7.4	.64	1,483	4,890	8.3	.65	1,455	7.3	.64	1,520	7.8	.65
	2,248	8.2	.63	489	8.0	.63	1,354	5,160	7.5	.63	1,455	.....	7.7	.63	1,538	7.4	.64	1,529	7.9	.63
CT-61	1,829	7.8	.64	468	8.9	.61	1,468	5,380	7.6	.66	1,608	4,680	7.9	.63	1,526	7.4	.65	1,415	7.3	.63
	2,432	8.1	.65	438	8.0	.62	1,534	3,180	7.5	.66	1,617	5,120	7.8	.64	1,530	7.1	.65	1,354	7.6	.64
	2,518	8.0	.64	446	8.0	.62	1,492	4,890	7.6	.66	1,674	5,020	7.8	.66	1,546	7.5	.64	1,574	7.8	.65
CT-62	2,316	8.0	.63	411	8.0	.63	1,403	4,680	7.5	.64	1,434	5,020	8.0	.62	1,471	7.4	.63	1,564	7.7	.62
	2,357	8.0	.63	543	8.0	.64	1,281	4,580	7.7	.62	1,544	5,220	8.3	.62	1,526	7.5	.63	1,486	7.7	.63
	2,263	8.0	.61	396	8.0	.63	1,442	4,690	7.7	.64	1,507	4,790	8.3	.61	1,511	7.3	.64	1,504	8.1	.62
CT-63	2,428	7.8	.63	508	7.7	.62	1,406	5,130	7.5	.64	1,486	4,810	8.4	.60	1,505	7.6	.62	1,612	7.9	.64
	2,470	8.0	.62	443	7.8	.61	1,361	4,440	7.6	.64	1,550	5,040	8.4	.62	1,528	7.4	.63	1,716	8.1	.63
	2,504	7.9	.62	413	7.6	.60	1,355	4,430	7.3	.63	1,616	5,150	8.6	.63	1,478	7.0	.63	1,710	7.7	.64
CT-64	2,242	7.9	.61	479	8.1	.61	1,517	4,760	7.2	.64	1,451	4,910	8.2	.61	1,431	7.3	.62	1,591	8.1	.60
	2,284	7.8	.60	413	8.1	.61	1,431	5,140	7.6	.62	1,416	2,690	8.1	.60	1,437	7.3	.62	1,512	8.1	.58
	2,075	7.9	.59	427	8.1	.58	1,384	4,900	7.6	.61	1,391	3,580	8.2	.59	1,304	7.0	.62	1,553	7.8	.58
CT-65	2,460	7.8	.64	535	8.2	.61	1,476	4,900	7.7	.62	1,524	3,110	8.4	.60	1,166	7.5	.61	1,582	5.2	.65
	2,432	7.9	.63	358	8.1	.61	1,509	5,520	7.7	.64	1,391	3,580	8.5	.59	1,358	7.4	.61	1,578	7.9	.60
	2,350	8.4	.62	476	8.1	.63	1,468	4,510	7.7	.64	1,401	3,640	8.4	.58	1,956	7.3	.64	1,548	7.9	.61
CT-66	2,562	8.4	.64	506	8.0	.62	1,243	4,160	7.5	.63	1,442	3,680	8.0	.63	1,578	7.2	.65	1,542	7.1	.63
	2,628	7.4	.65	522	8.0	.62	1,522	4,770	7.9	.64	1,486	.....	8.1	.63	1,428	7.4	.65	1,670	7.4	.66
	2,668	7.8	.65	378	8.1	.59	1,366	4,900	7.6	.62	1,460	4,160	7.5	.64	1,374	7.2	.65	1,488	7.4	.59
CT-67	2,503	7.4	.66	514	8.0	.63	1,472	5,020	7.7	.66	1,578	4,790	7.2	.66	1,289	7.2	.64	1,544	7.4	.62
	2,547	7.8	.66	446	8.0	.64	1,544	5,780	8.0	.66	1,493	4,020	7.7	.65	1,501	7.5	.65	1,470	7.1	.63
	2,690	7.7	.67	522	7.8	.63	1,200	.....	7.9	.66	1,527	4,500	7.6	.66	1,540	7.5	.65	1,468	7.3	.63
CT-68	2,520	7.5	.64	466	7.9	.64	1,456	5,380	8.0	.63	1,480	3,920	8.1	.63	1,451	7.9	.62	1,548	7.6	.65
	2,379	7.7	.63	528	8.0	.63	1,484	5,020	8.0	.64	1,544	4,020	7.8	.64	1,480	7.8	.62	1,716	7.2	.68
	2,460	8.0	.63	528	7.8	.63	1,434	5,520	7.6	.65	1,527	3,670	8.0	.62	1,529	7.5	.64	1,595	7.7	.65
CT-69	2,449	8.2	.64	524	8.1	.62	1,471	4,650	7.9	.62	1,626	5,040	7.8	.65	1,502	7.8	.64	1,620	7.7	.65
	2,714	8.4	.65	522	8.2	.63	1,536	5,520	7.8	.63	1,556	4,510	7.5	.64	1,573	7.6	.64	1,636	7.4	.64
	2,730	8.2	.65	476	8.2	.62	1,605	5,260	7.9	.64	1,565	4,760	7.8	.64	.....	.....	.....	1,644	7.5	.63
CT-70	2,350	7.8	.62	497	8.2	.60	1,500	5,140	7.2	.63	1,518	4,420	7.7	.62	1,666	7.9	.65	1,631	7.6	.64
	2,392	8.3	.61	474	8.0	.61	1,210	5,020	7.2	.64	1,576	4,650	7.7	.62	1,522	7.6	.63	1,506	7.4	.59
	2,399	8.1	.62	410	7.9	.63	1,552	4,270	6.8	.65	1,541	5,130	7.7	.62	.....	.....	.....	1,566	7.4	.64
CT-71	2,401	8.3	.64	520	7.8	.66	1,600	5,140	7.9	.66	1,632	5,020	7.7	.65	1,690	8.1	.65	1,695	7.5	.66
	2,502	8.0	.63	390	7.8	.64	1,640	5,020	7.9	.67	1,647	4,760	7.9	.65	1,680	8.0	.65	1,698	7.3	.67
	2,500	8.6	.64	422	8.0	.62	1,582	4,780	7.9	.65	1,552	5,140	8.1	.64	1,775	7.7	.66	1,610	8.0	.66
CT-72	1,752	8.1	.52	369	7.7	.52	1,120	3,740	7.9	.49	1,125	3,180	7.8	.53	1,121	7.7	.52	1,368	7.6	.62
	1,978	7.9	.53	394	7.5	.52	1,099	3,520	7.9	.49	1,094	3,420	7.7	.53	1,124	7.5	.51	1,281	7.0	.61
	1,520	8.4	.49	338	7.8	.54	1,081	3,270	7.5	.50	1,128	3,500	7.8	.52	1,096	7.3	.50	1,180	7.5	.59
	1,508	8.4	.49	359	8.0	.50	1,088	3,270	7.9	.49	984	3,200	7.5	.48	1,057	7.8	.50	1,172	7.5	.56
	1,642	8.4	.52	334	8.1	.50	1,276	3,700	7.4	.58	1,084	3,260	7.5	.50	1,214	7.5	.52	1,162	7.3	.57
	1,937	8.3	.50	393	8.2	.52	1,250	3,860	7.3	.58	1,106	3,340	7.6	.51	1,194	7.3	.49	1,116	7.5	.55

(continued)

Table 5.--(continued)

Corresponding cylinder specimen number	Bending: Bending parallel to face grain: E_1 (1,000 psi.)	Moisture content (Percent)	Specific gravity	Bending: Bending perpendicular to face grain: E_2 (1,000 psi.)	Moisture content (Percent)	Specific gravity	Compression: Compression parallel to face grain: E_a (1,000 psi.)	Proportional limit stress (Psi.)	Moisture content (Percent)	Specific gravity	Compression: Compression perpendicular to face grain: E_b (1,000 psi.)	Proportional limit stress (Psi.)	Moisture content (Percent)	Specific gravity	Tension: Tension parallel to face grain: E_a (1,000 psi.)	Moisture content (Percent)	Specific gravity	Tension: Tension perpendicular to face grain: E_b (1,000 psi.)	Moisture content (Percent)	Specific gravity
CT-73	1,540	8.6	0.55	324	8.3	0.50	1,017	3,260	7.4	0.52	1,107	3,110	8.0	0.50	1,218	7.7	0.51	1,284	8.2	0.55
	1,734	8.4	.56	356	8.6	.50	1,010	3,180	7.6	.51	1,180	3,340	8.1	.50	1,212	7.4	.51	1,219	8.5	.52
	1,544	8.4	.50	388	8.3	.52	1,045	2,630	7.6	.50	1,120	3,830	7.9	.50	1,064	8.6	.50	1,236	8.4	.54
	1,601	8.2	.50	383	8.3	.52	972	3,340	7.5	.50	1,111	3,430	7.9	.51	1,114	8.0	.51	1,086	8.6	.53
	1,530	8.3	.49	359	8.4	.52	1,240	3,270	7.6	.51	1,112	3,430	7.9	.51	1,229	7.5	.51	1,056	8.3	.53
	1,327	8.0	.52	332	8.4	.53	1,098	3,180	7.6	.54	1,092	3,130	7.6	.51	1,122	8.3	.50	1,126	8.7	.53
CT-74	1,554	8.3	.48	365	8.0	.64	1,074	3,100	7.4	.52	1,148	3,180	7.9	.51	1,392	8.3	.64	1,232	8.6	.53
	1,622	8.1	.47	356	8.1	.63	1,022	2,970	8.1	.49	1,234	3,350	7.8	.51	1,500	8.0	.65	1,184	8.3	.51
	1,467	8.0	.51	434	8.0	.65	1,018	3,100	8.3	.50	1,209	3,820	8.2	.51	1,485	7.9	.67	1,136	8.7	.52
	1,665	8.1	.54	343	7.6	.53	1,044	3,820	8.4	.50	1,114	3,340	7.7	.51	1,118	7.6	.48	1,254	8.4	.54
	1,645	8.2	.54	326	7.6	.51	1,002	3,180	8.3	.51	1,096	3,260	7.9	.50	1,070	7.4	.48	1,196	8.3	.54
	1,686	8.3	.55	380	7.7	.54	1,164	3,510	8.4	.54	992	3,190	8.1	.49	1,159	7.4	.50	1,005	7.8	.49
CT-75	1,590	7.8	.51	367	8.1	.51	1,102	3,270	8.1	.50	1,088	3,110	8.1	.51	1,179	7.0	.52	1,100	8.0	.57
	1,456	8.2	.51	359	8.3	.51	1,023	3,200	8.1	.48	1,047	3,030	7.9	.50	1,175	7.7	.51	1,118	7.8	.53
	1,508	8.0	.48	358	8.0	.52	976	3,570	7.7	.48	1,128	3,040	8.2	.50	1,180	7.6	.51	1,178	8.2	.55
	1,532	7.9	.48	301	7.9	.48	990	2,960	7.5	.48	1,097	3,270	8.1	.50	1,246	7.4	.51	1,145	7.2	.51
	1,626	8.0	.50	330	8.2	.52	1,000	2,630	7.5	.51	1,186	3,420	8.0	.53	1,234	7.2	.50	1,266	7.8	.56
	1,478	7.9	.48	328	8.3	.49	952	3,030	7.6	.49	1,150	3,580	8.2	.52	1,224	7.9	.50	1,249	7.0	.57
CT-76	1,982	7.6	.53	365	8.1	.48	974	3,270	8.2	.49	1,122	2,820	8.1	.50	1,179	7.5	.48	1,244	8.0	.55
	1,842	7.5	.51	339	8.0	.47	942	3,120	8.0	.49	1,216	2,940	8.2	.53	1,202	7.6	.50	1,176	7.3	.54
	1,715	7.5	.50	304	8.1	.46	968	3,270	7.9	.48	1,111	3,020	8.0	.53	1,070	7.6	.49	1,108	7.8	.53
	1,622	7.6	.50	334	8.0	.47	992	3,200	8.1	.48	1,047	2,870	8.1	.51	1,028	8.1	.51	1,112	7.4	.52
	1,845	7.4	.49	358	8.0	.50	1,064	3,270	8.0	.50	1,144	2,860	8.1	.52	999	7.8	.50	1,194	7.2	.53
	1,722	7.5	.49	318	8.4	.49	1,104	3,350	7.8	.51	1,068	3,030	7.9	.49	1,134	7.4	.51	1,285	7.4	.58
CT-77	1,538	7.4	.61	326	8.4	.53	1,294	3,710	8.5	.62	1,016	2,510	8.1	.53	1,096	7.2	.52	1,040	7.4	.51
	1,940	7.5	.64	357	8.3	.54	1,078	3,910	8.4	.60	1,015	3,010	7.9	.54	1,245	7.7	.53	1,016	7.6	.52
	1,636	8.2	.51	330	8.3	.52	1,214	3,340	8.2	.56	1,121	3,080	7.8	.56	1,331	7.4	.54	1,015	7.9	.52
	2,134	8.2	.55	362	7.7	.55	1,124	3,520	8.5	.54	1,182	3,900	7.9	.57	1,439	7.3	.63	1,238	8.0	.54
	2,316	7.9	.56	360	7.9	.54	1,218	3,430	8.4	.53	1,100	3,080	8.0	.56	1,352	7.5	.57	1,150	7.3	.53
	2,100	8.2	.53	370	7.7	.53	1,145	4,060	8.2	.52	1,088	3,260	7.8	.58	1,246	7.8	.58	1,230	7.3	.55
CT-78	1,909	8.3	.50	374	8.1	.50	1,074	3,740	8.0	.49	1,015	2,800	7.7	.50	1,059	7.4	.51	1,202	7.3	.52
	2,010	7.4	.52	336	7.6	.50	1,168	3,280	8.4	.49	1,058	2,560	7.6	.51	1,132	7.4	.50	1,151	7.9	.52
	1,850	7.1	.52	365	7.7	.50	1,090	3,270	8.1	.50	1,086	2,860	7.9	.51	1,035	7.6	.49	1,088	7.6	.51
	1,855	7.5	.51	352	7.8	.50	1,117	3,270	8.2	.51	1,136	3,110	8.0	.51	1,174	7.2	.51	1,085	7.9	.50
	2,059	7.5	.51	310	7.9	.47	1,132	2,580	8.0	.51	1,038	3,120	8.0	.50	1,270	8.0	.51	1,210	8.0	.51
	1,989	7.5	.50	298	7.9	.47	1,142	2,870	8.2	.51	1,014	3,110	8.0	.50	1,116	7.1	.49	1,230	7.3	.53
CT-79	2,070	7.7	.54	384	8.3	.50	1,198	3,580	8.1	.52	1,202	3,160	7.6	.58	1,276	7.3	.56	1,402	8.1	.61
	1,954	7.6	.52	344	8.0	.51	1,157	3,830	8.0	.52	1,226	3,690	8.0	.58	1,260	7.4	.57	1,332	8.1	.60
	2,097	7.9	.52	338	8.1	.51	1,082	3,110	8.1	.52	1,222	3,350	7.6	.56	1,418	7.5	.56	1,278	7.8	.60
	2,150	7.6	.52	436	7.7	.53	1,158	3,920	8.3	.53	1,217	3,270	8.0	.54	1,366	7.8	.57	1,154	7.8	.54
	1,826	7.4	.53	435	7.9	.55	1,172	4,130	7.8	.58	1,218	2,940	7.5	.54	1,256	7.9	.55	1,181	8.0	.54
	2,168	7.6	.53	412	8.0	.56	1,263	4,230	8.0	.60	1,198	3,770	7.5	.56	1,210	7.9	.54	1,278	8.1	.55
CT-80	2,269	8.0	.52	311	8.0	.49	1,073	3,030	8.4	.49	1,202	3,850	8.1	.54	1,280	7.3	.54	1,326	7.7	.60
	1,988	8.0	.50	382	8.2	.52	1,052	3,200	8.5	.48	1,072	2,760	8.0	.53	1,168	7.5	.52	1,376	7.8	.62
	1,908	7.9	.50	368	8.0	.53	1,058	3,030	8.4	.50	1,126	3,770	7.7	.53	1,136	8.1	.50	1,192	8.4	.58
	2,098	8.0	.51	360	7.8	.53	1,098	3,340	8.4	.51	1,200	3,440	7.6	.53	1,238	7.7	.52	1,164	7.7	.53
	2,074	8.1	.51	380	7.6	.53	1,118	3,860	8.4	.54	1,176	3,180	8.0	.53	1,306	8.0	.52	1,290	8.4	.57
	2,206	8.1	.51	411	8.2	.53	1,166	3,340	8.0	.54	1,226	3,860	7.9	.56	1,186	8.1	.49	1,408	8.0	.60
CT-81	1,674	7.8	.61	337	8.2	.53	1,486	4,460	8.2	.64	1,209	3,580	7.9	.55	1,337	7.4	.56	1,255	8.6	.54
	2,017	8.0	.64	372	7.9	.55	1,389	5,160	8.4	.62	1,345	3,760	7.9	.58	1,266	7.6	.54	1,169	8.3	.53
	1,787	8.2	.52	408	8.0	.56	1,138	4,150	8.4	.56	1,363	4,270	7.6	.59	1,258	8.0	.54	1,114	8.4	.52
	1,977	8.4	.54	368	7.9	.55	1,118	3,580	8.6	.55	1,202	3,180	7.5	.56	1,382	7.4	.60	1,149	8.4	.55
	1,873	8.2	.53	373	7.9	.56	1,240	4,540	8.5	.56	1,218	3,180	7.9	.57	1,356	7.5	.58	1,268	8.3	.57
	2,210	8.4	.58	334	7.9	.52	1,162	4,430	8.5	.55	1,238	3,420	8.0	.57	1,277	7.6	.57	1,245	9.0	.54
CT-82	1,724	8.1	.52	323	8.2	.44	992	2,860	9.0	.50	1,084	3,760	7.9	.49	1,232	8.8	.54	1,452	8.4	.58
	1,701	8.1	.54	321	8.4	.53	1,030	3,180	9.1	.51	1,065	3,000	7.6	.48	1,236	7.9	.56	1,490	8.7	.57
	1,618	8.1	.52	381	8.3	.58	847	2,690	8.9	.48	1,074	2,760	8.4	.47	1,269	9.1	.51	1,376	8.2	.55
	1,690	8.1	.53	420	8.6	.53	857	3,000	8.8	.48	1,224	3,340	8.1	.53	1,048	8.6	.50	1,284	8.4	.55
	1,693	8.1	.54	381	8.5	.53	920	2,940	8.0	.49	1,130	3,500	7.9	.51	1,049	8.9	.50	1,326	8.4	.55
	1,667	8.0	.53	366	8.6	.53	972	2,690	7.9	.50	1,156	3,330	8.7	.52	1,050	8.9	.50	1,284	8.5	.57
CT-83	1,866	8.2	.55	356	7.9	.54	1,057	3,910	8.2	.54	1,374	4,060	8.6	.55	982	7.7	.52	1,309	8.3	.60
	1,859	7.8	.57	356	8.4	.54	1,180	2,940	8.0	.54	1,236	3,810	8.5	.54	1,014	7.6	.53	1,374	8.5	.58
	1,994	8.5	.55	279	8.4	.50	1,304	3,420	8.0	.56	1,264	3,350	8.5	.54	1,044	8.8	.53	1,434	8.0	.58
	1,917	8.3	.55	336	8.5	.53	1,202	3,500	8.0	.52	1,114	3,170	8.9	.53	1,240	8.4	.58	1,111	8.2	.54
	1,994	8.6	.55	306	8.3	.52	1,126	3,110	8.1	.55	1,063	3,100	8.8	.52	1,263	8.3	.59	1,219	8.5	.55
	1,967	8.4	.54	312	8.3	.52	1,200	2,870	7.8	.56	1,082	3,290	8.6	.54	1,235	8.5	.56	1,198	7.8	.55

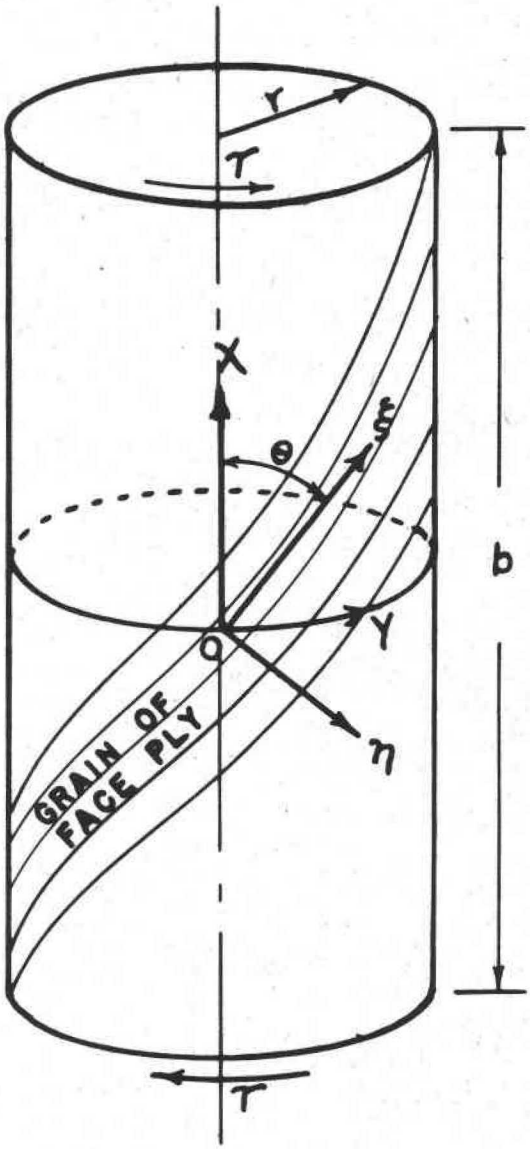

Figure 1.--Orientation of axes in the middle surface of cylindrical shell.

Z M 61833 F

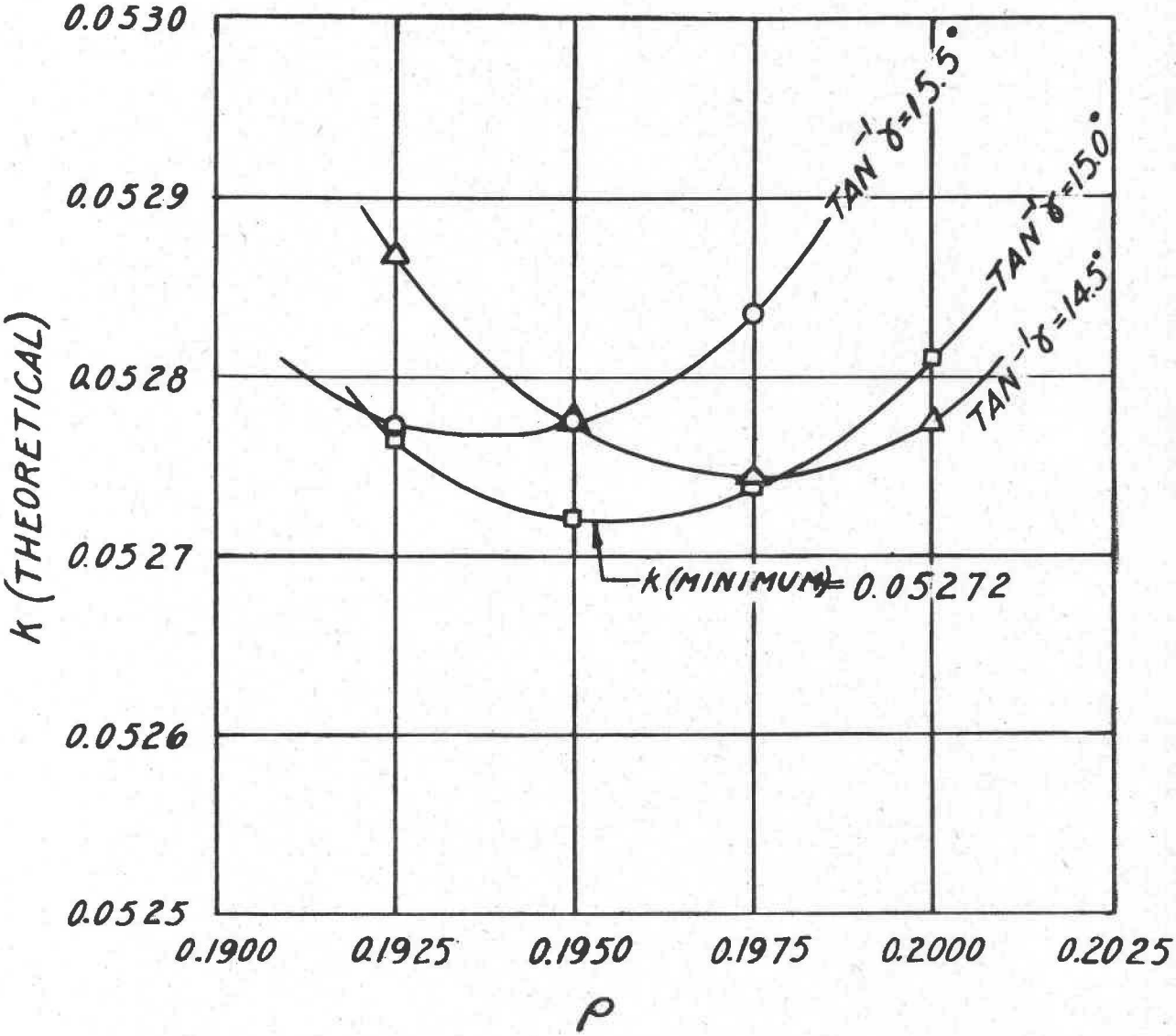

Figure 2.--A typical graphical determination of $k_{theoretical}$.

Z M 61834 F

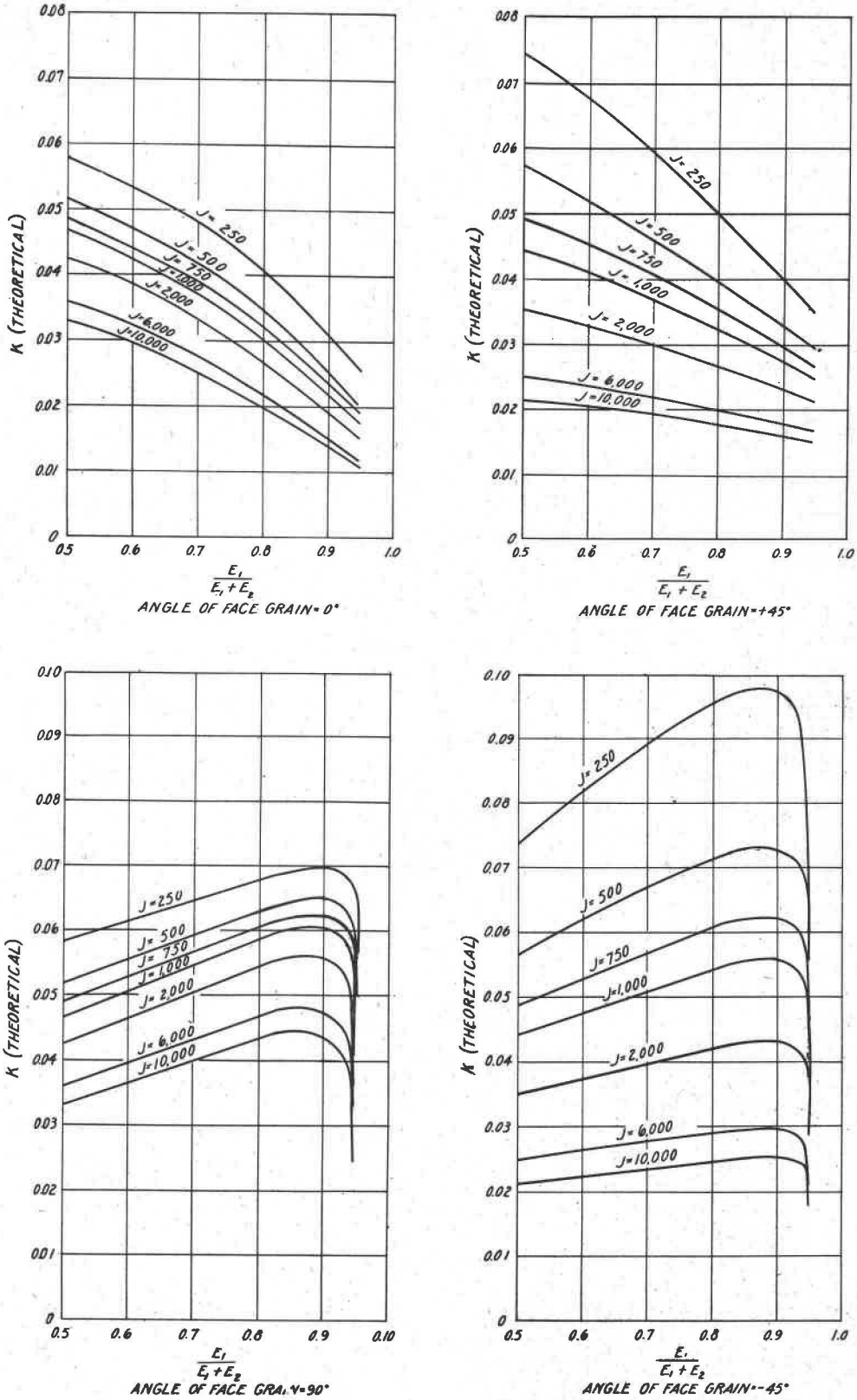

Figure 3.--Theoretical buckling constants for thin-walled plywood cylinders in torsion, $\mu_{LT}/E_L = 0.056$.

Z M 61835 F

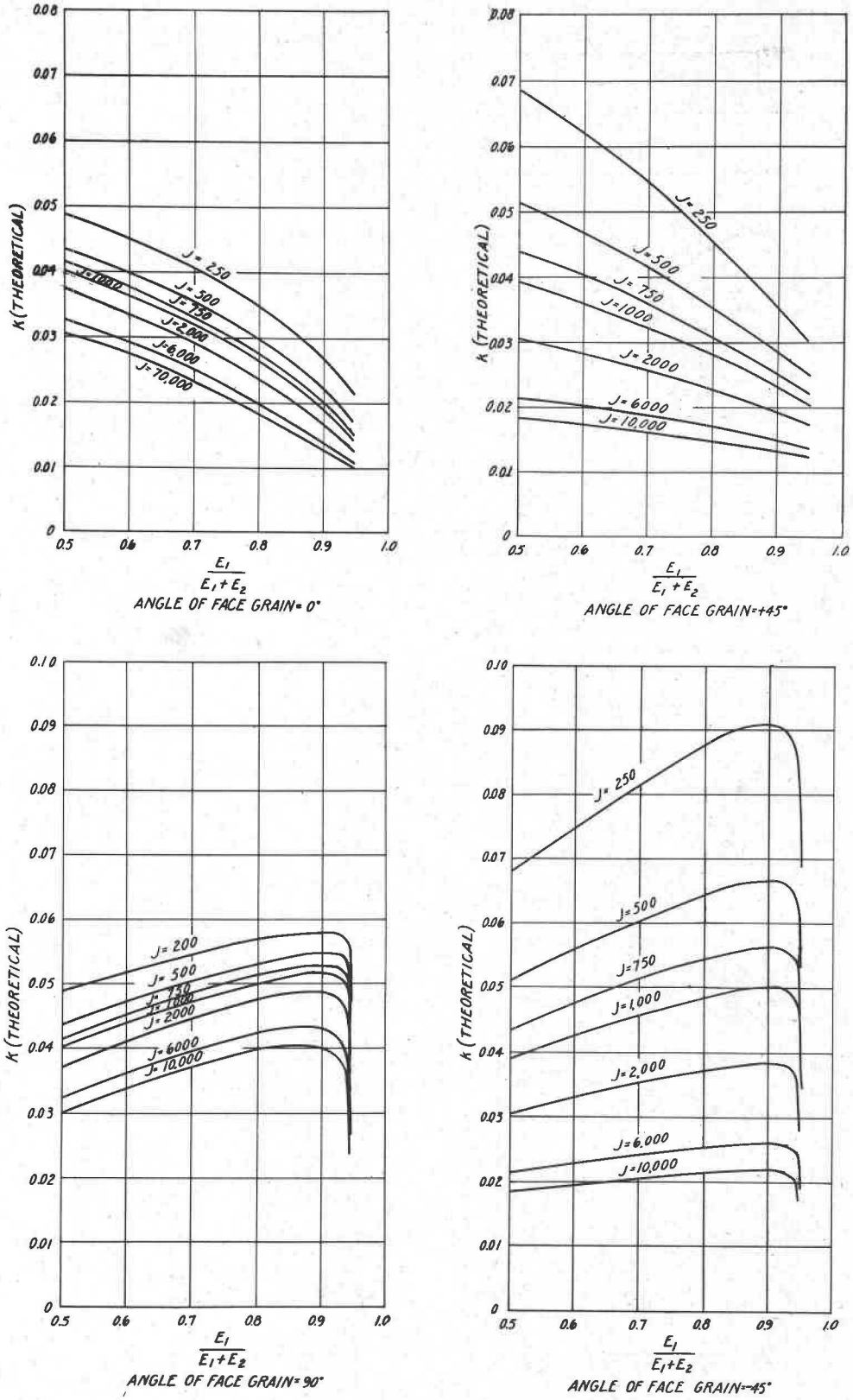

Figure 4.--Theoretical buckling constants for thin-walled plywood cylinders in torsion, $\mu_{LT}/E_L = 0.036$.

Z M 61836 F

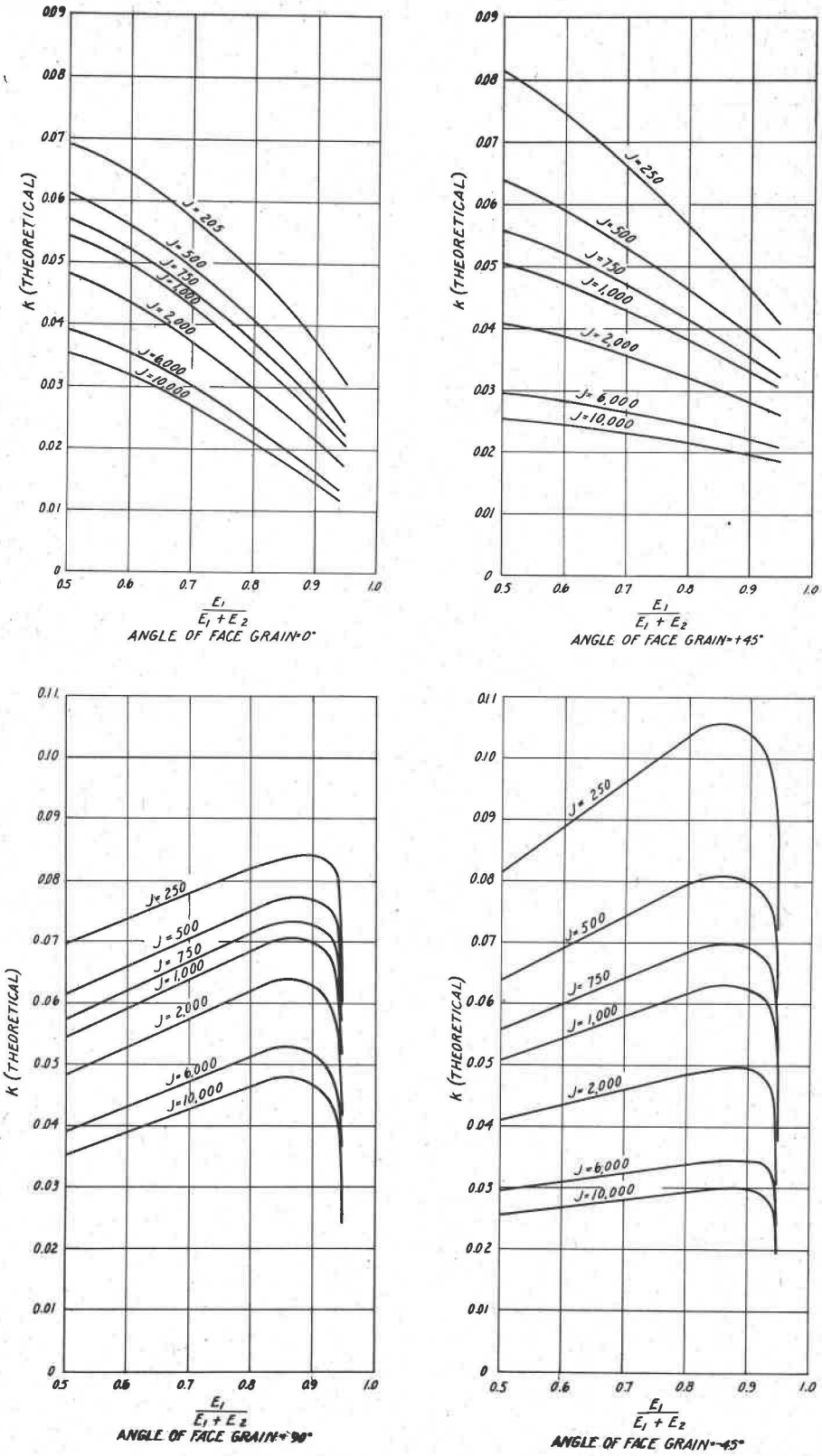

Figure 5.--Theoretical buckling constants for thin-walled plywood cylinders in torsion, $\mu_{LT}/E_L = 0.090$.

Z M 61837 F

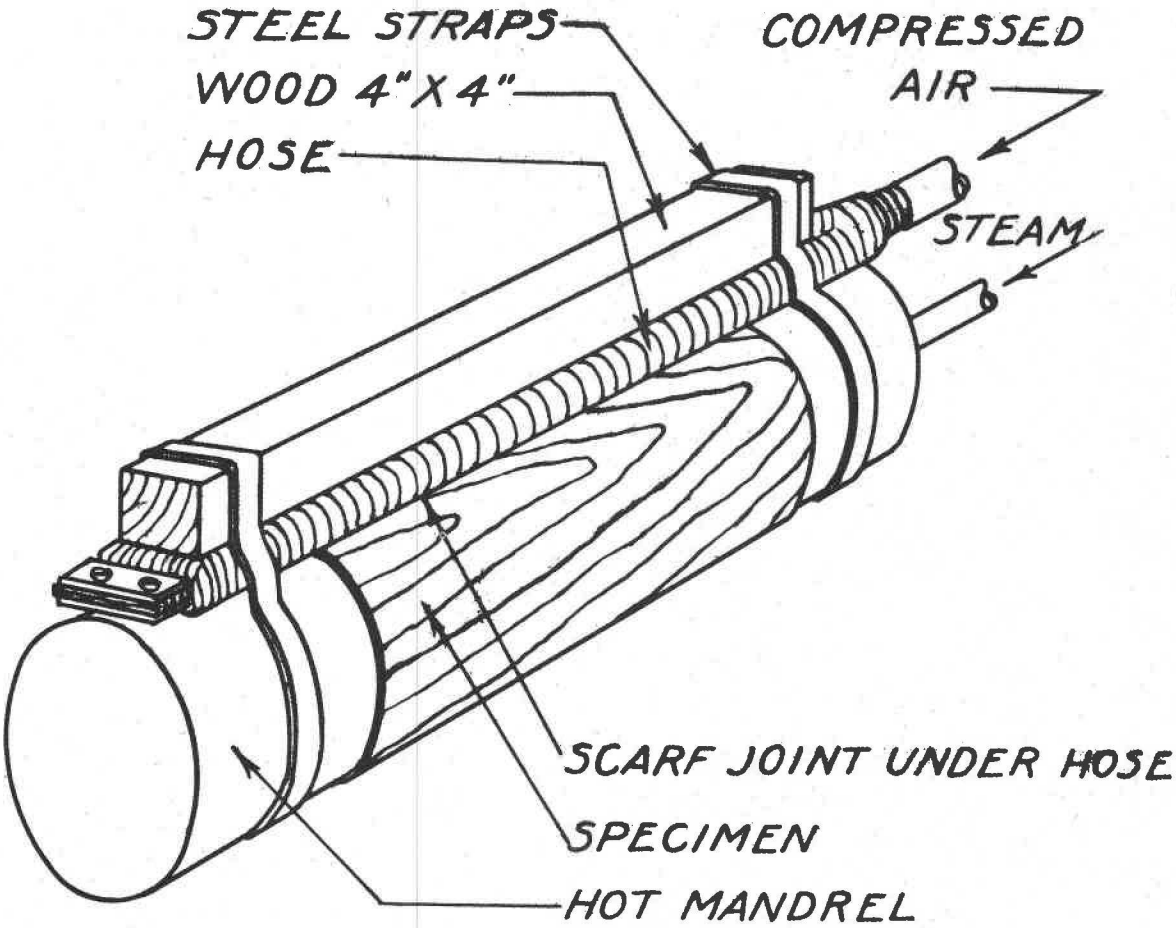

Figure 6.--Apparatus for gluing cylinder scarf joint.

Z M 48824 F

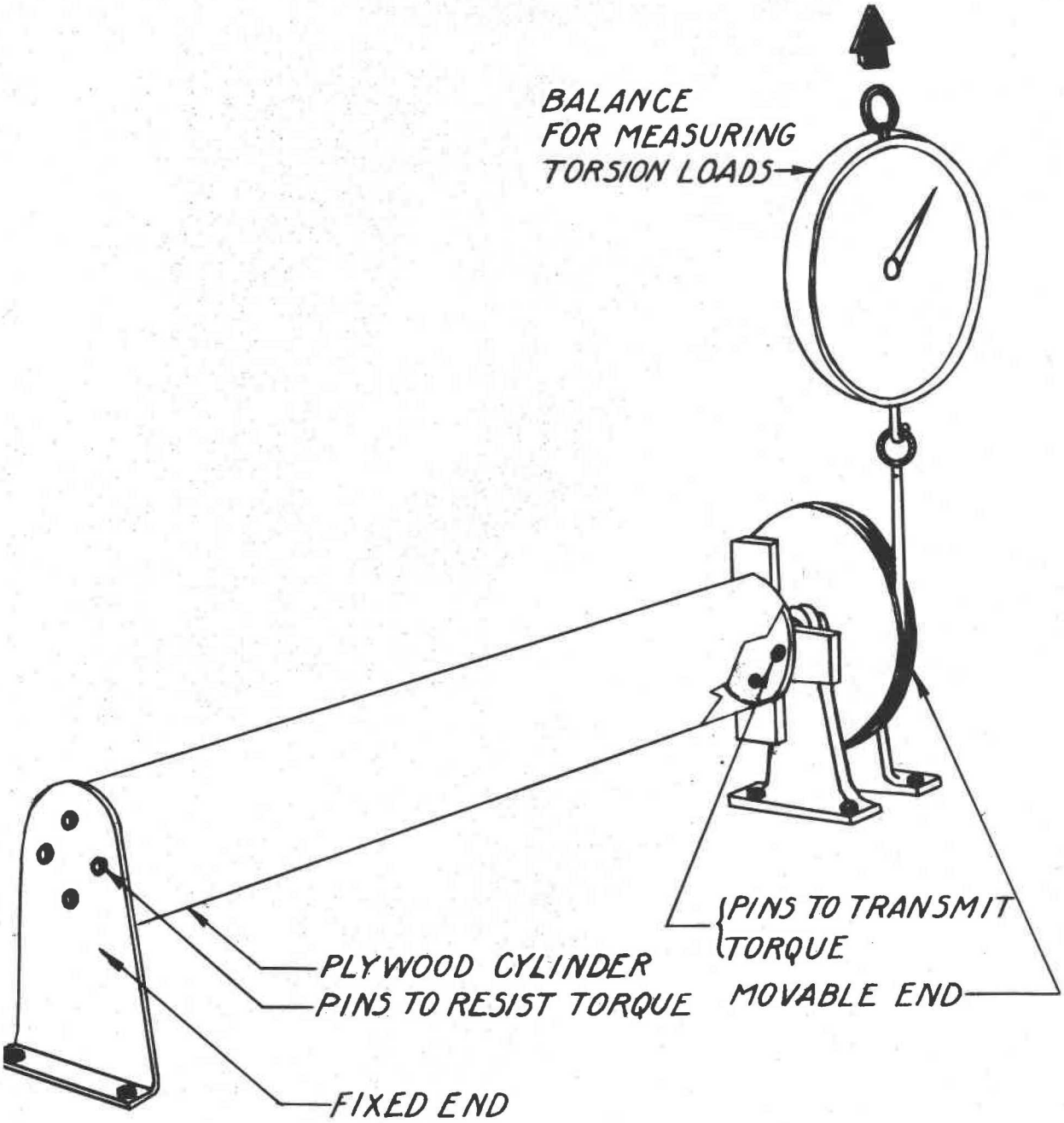

Figure 7.--Apparatus for testing thin-walled plywood cylinders, 10-1/2 inches in diameter, in torsion.

Z M 61838 F

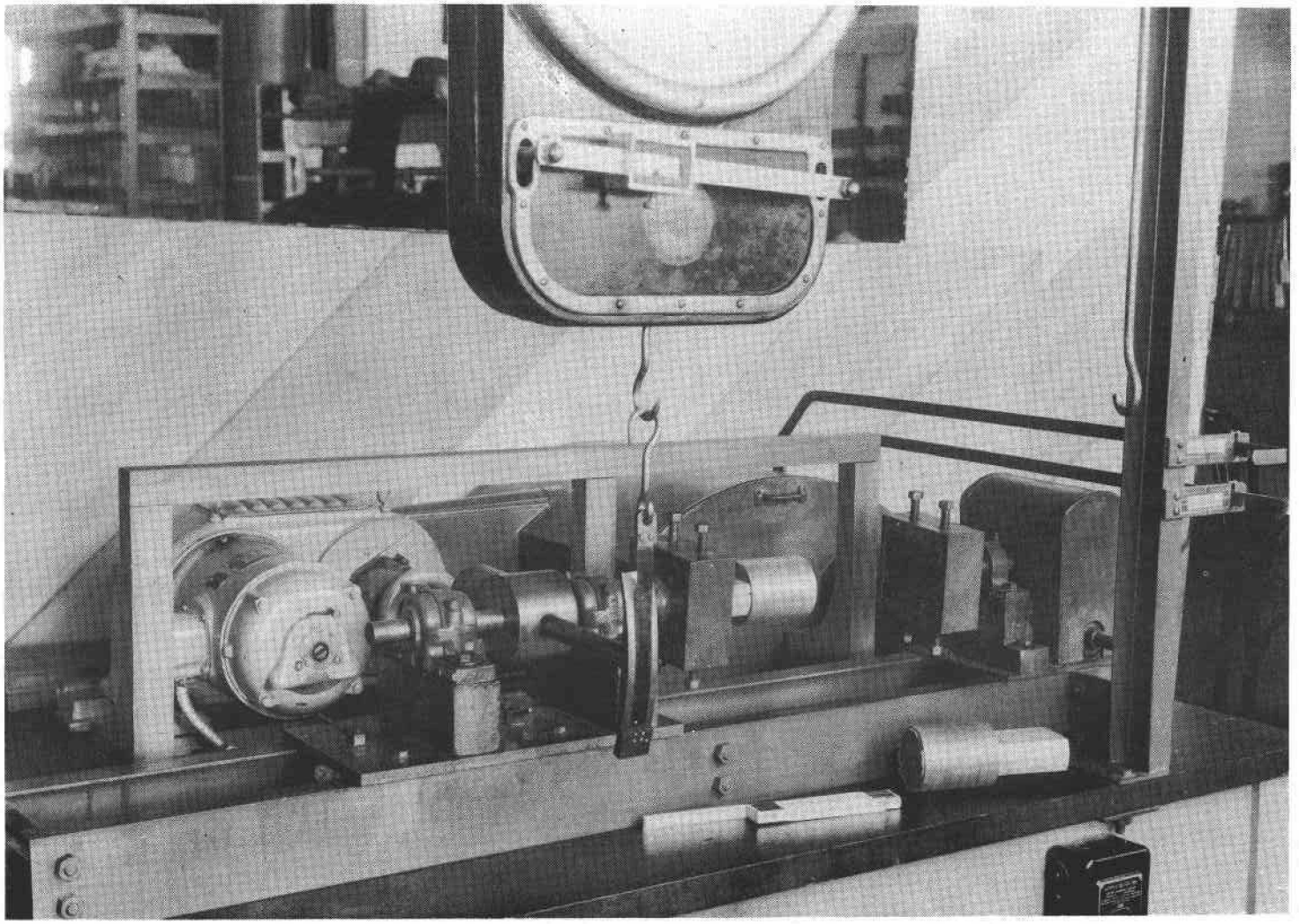

Figure 8.--Apparatus for testing thin-walled plywood cylinders, 3 inches in diameter, in torsion.

Z M 59812 F

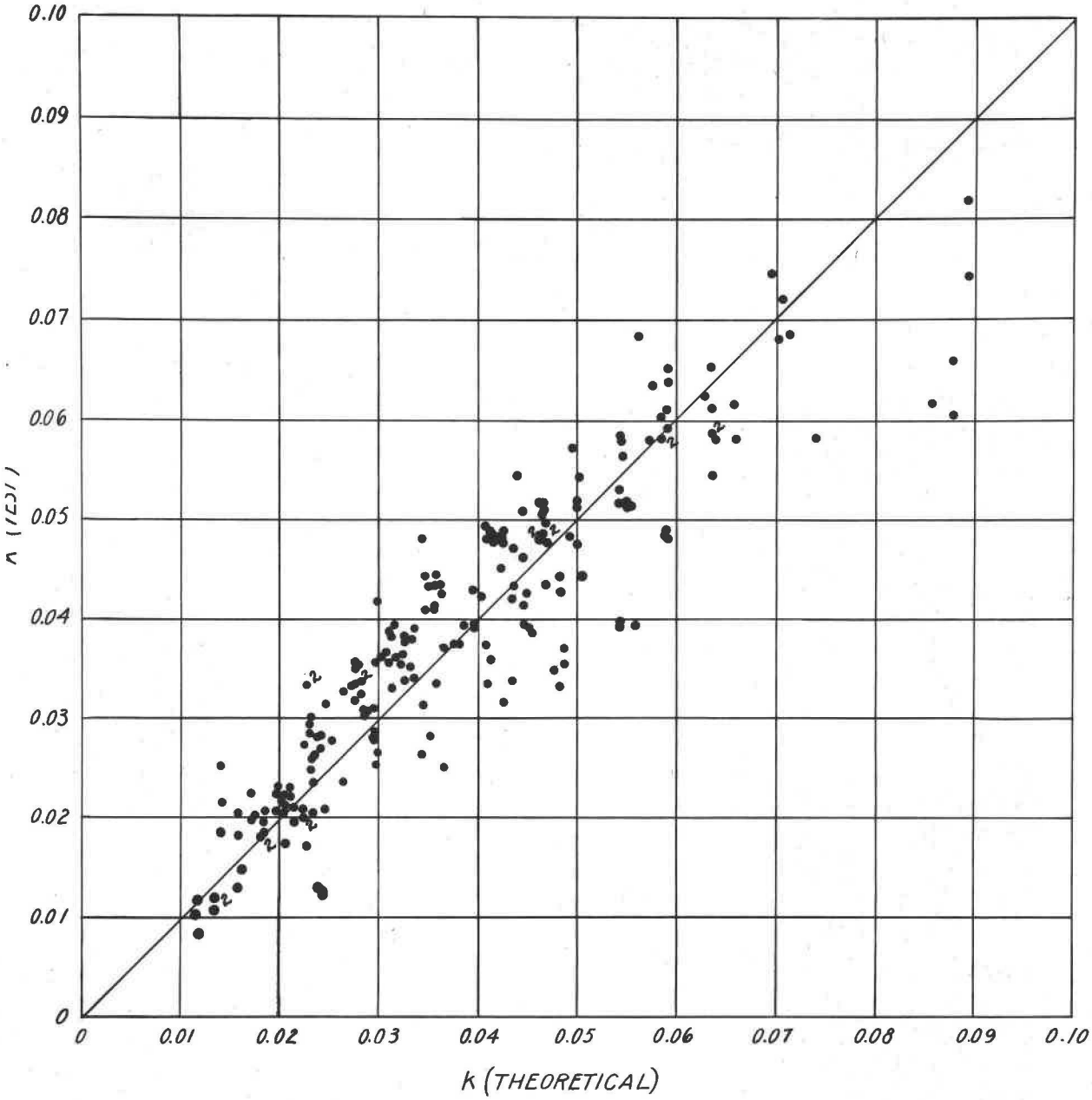

Figure 9.--Relationship of observed to theoretical torsion buckling constants for thin-walled plywood cylinders, 10-1/2 inches in diameter.

Z M 61839 F

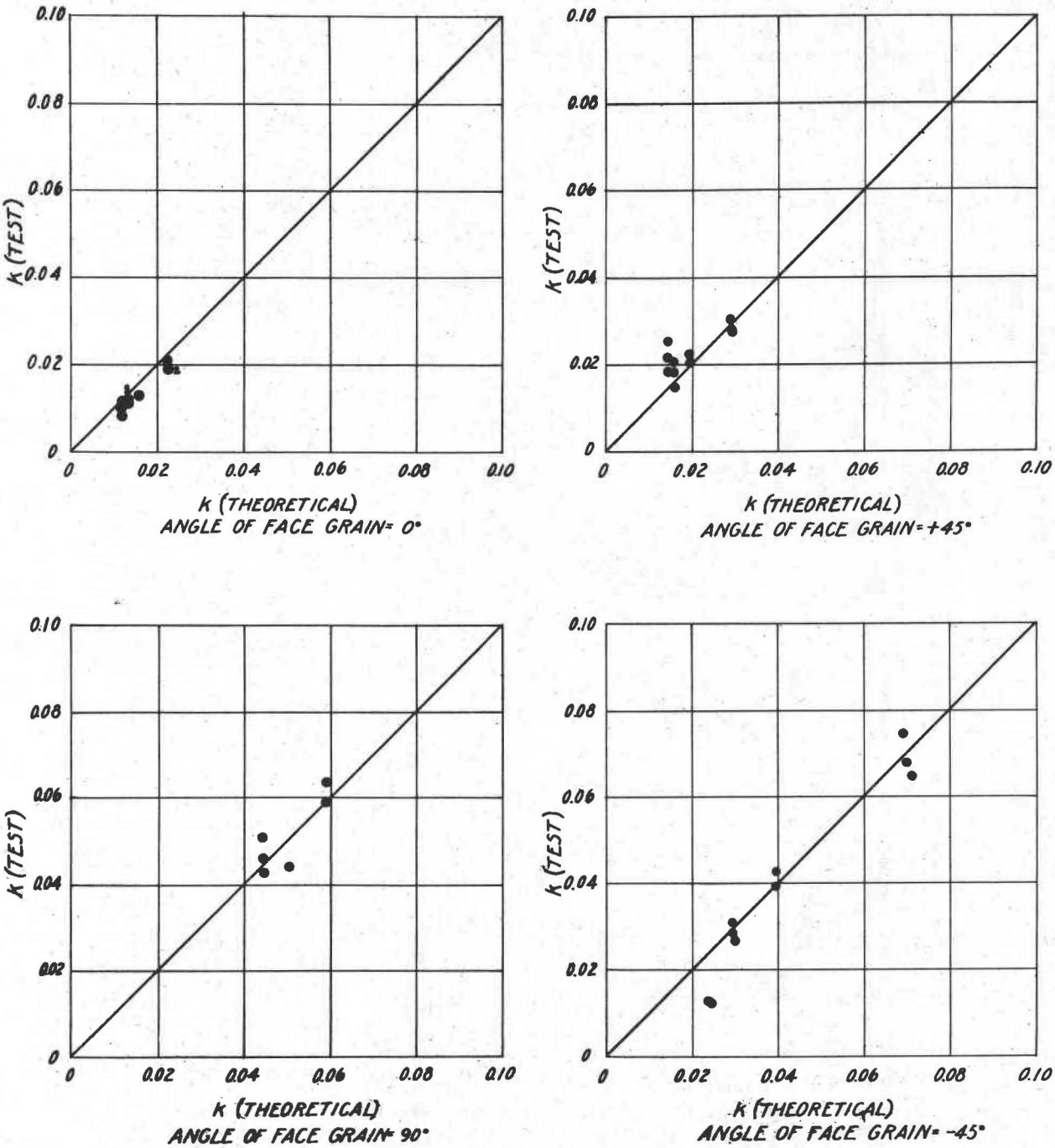

Figure 10.--Relationship of observed to theoretical torsion buckling constants for thin-walled plywood cylinders, 10-1/2 inches in diameter. Three-ply plywood; face veneers and core veneer 1/100 inch thick.

Z M 61840 F

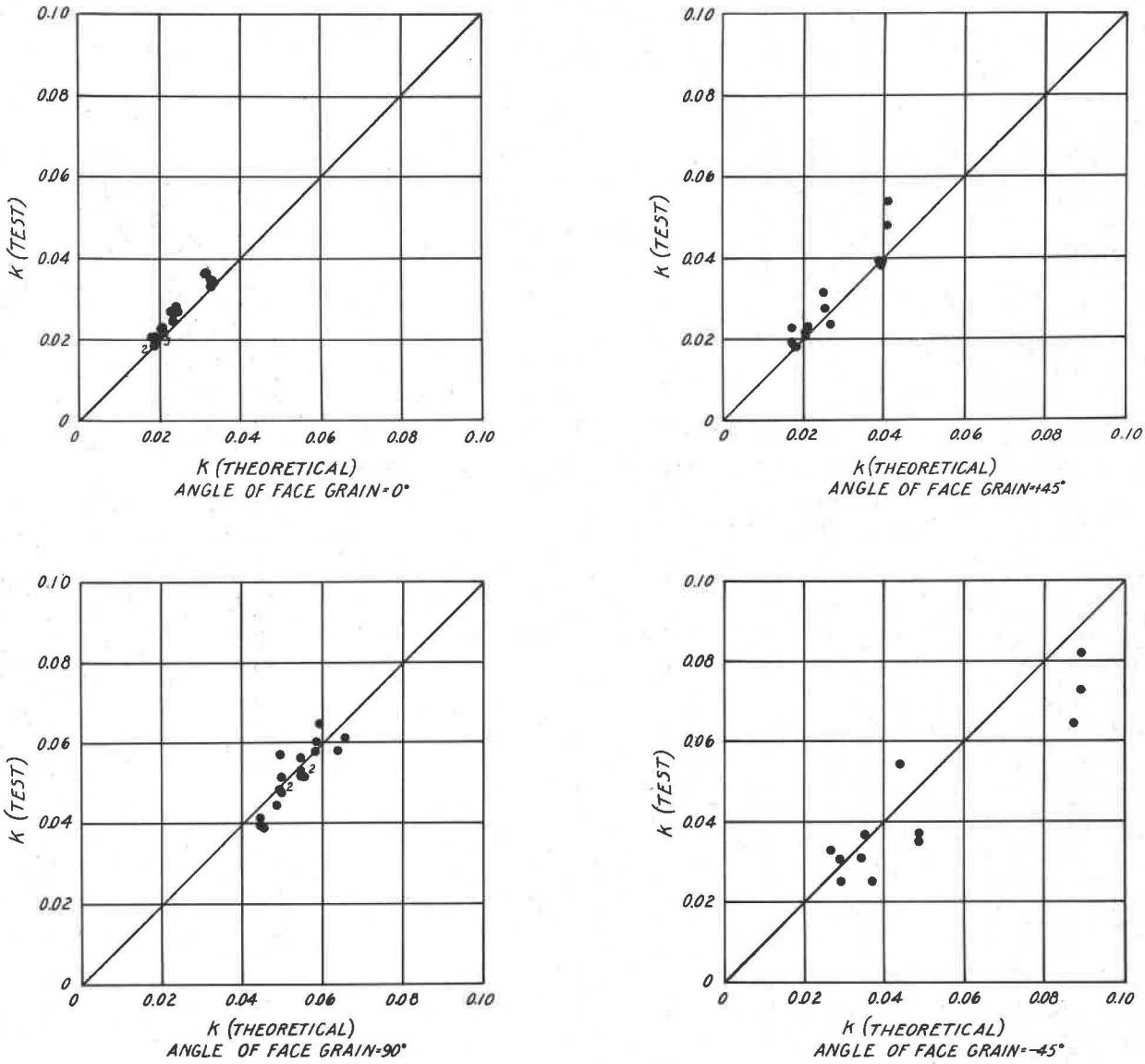

Figure 11.--Relationship of observed to theoretical torsion buckling constants for thin-walled plywood cylinders, 10-1/2 inches in diameter. Three-ply plywood. Face veneers half as thick as the core veneer.

Z M 61841 F

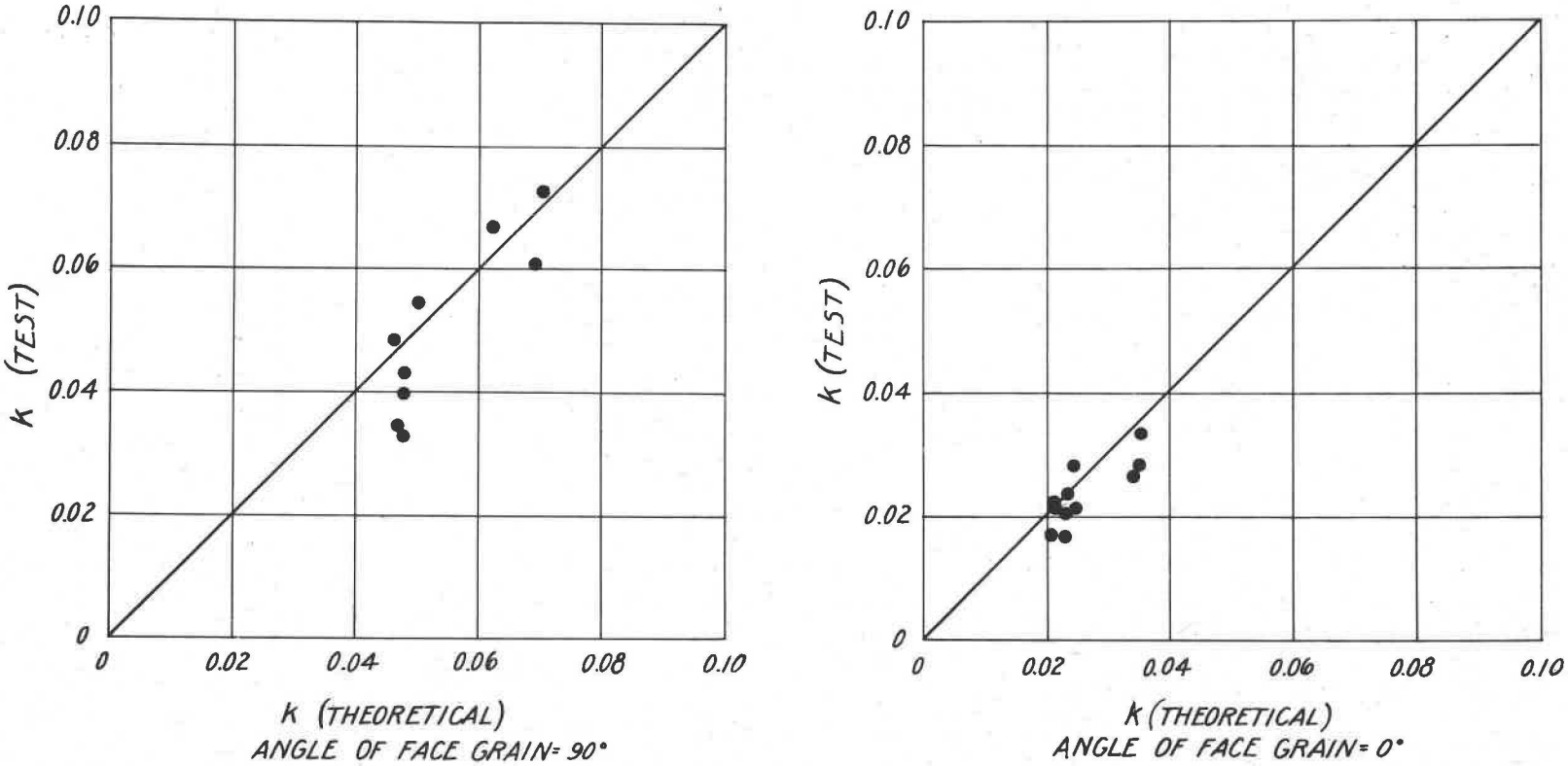

Figure 12.--Relationship of observed to theoretical torsion buckling constants for thin-walled plywood cylinders, 10-1/2 inches in diameter. Three-ply plywood; face veneers 1/100 inch and core veneers 1/40 inch thick.

Z M 61842 F

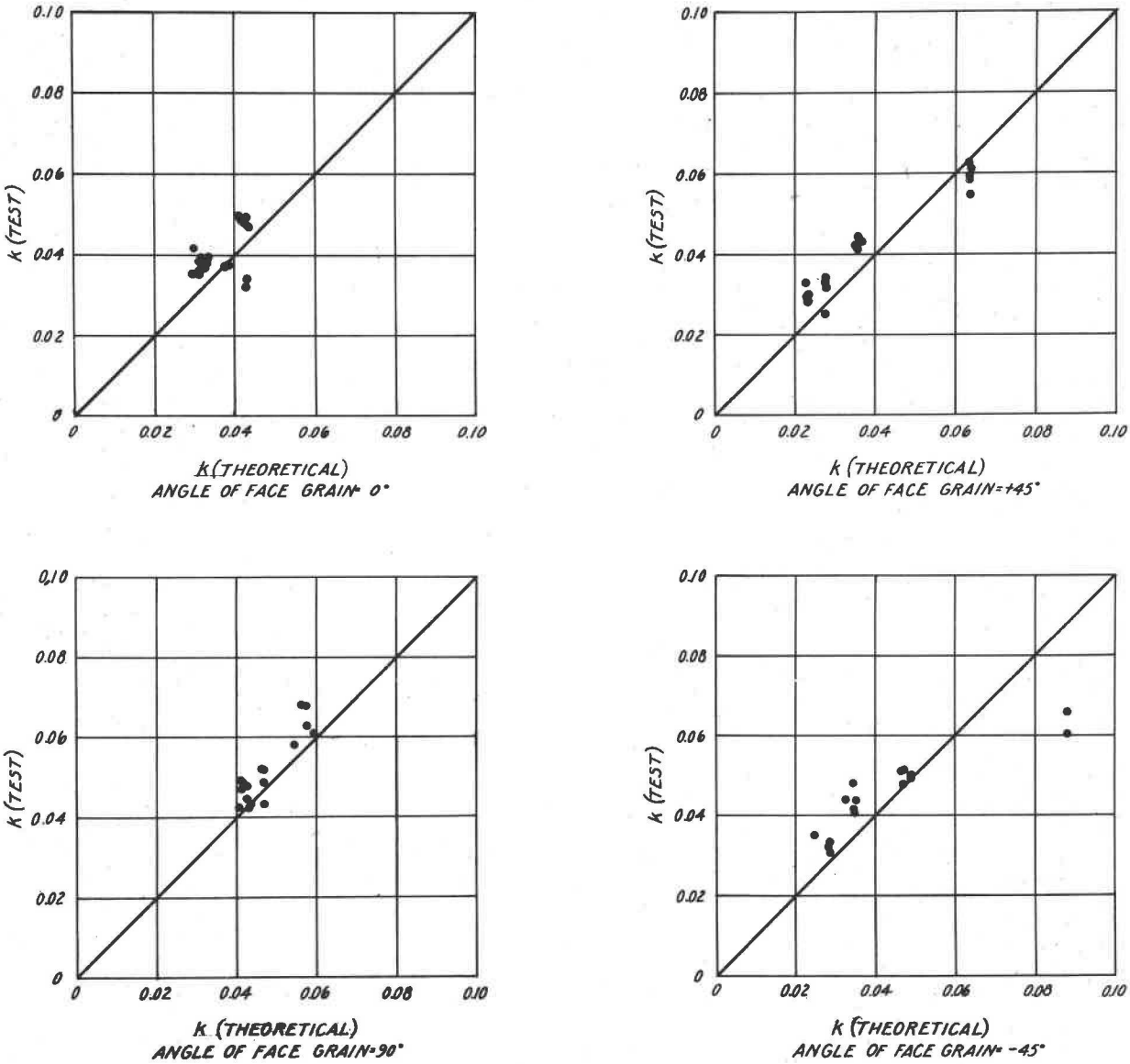

Figure 13.--Relationship of observed to theoretical torsion buckling constants for thin-walled plywood cylinders, 10-1/2 inches in diameter. Five-ply plywood; face veneers 1/100 inch and crossband and core veneers 1/64 inch thick.

Z M 61843 F

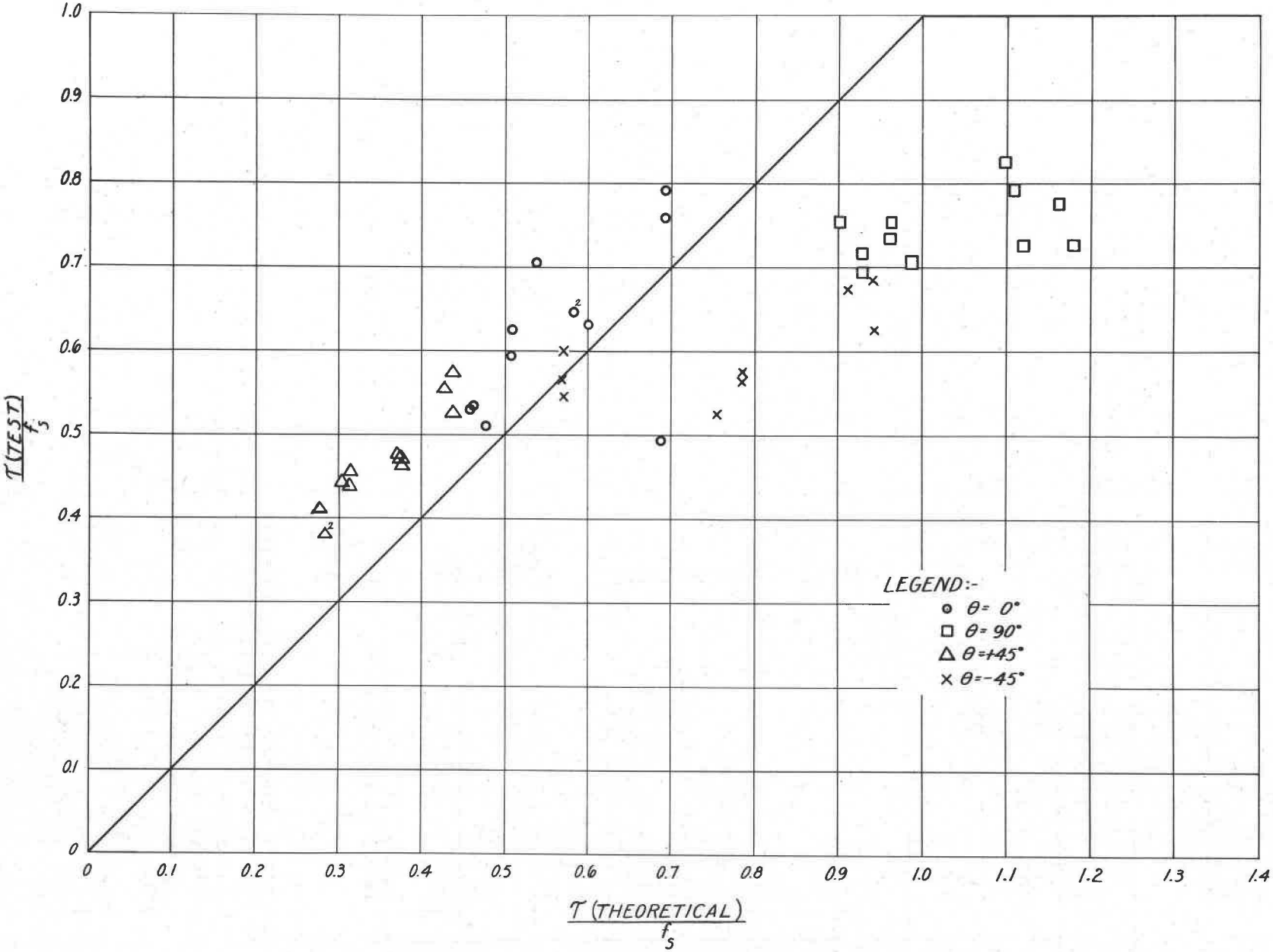

Figure 14.--Comparison of test and computed buckling stresses for three-ply yellow birch plywood cylinders, 3 inches in diameter, showing effect of approach of buckling stress to shearing strength.

Z M 61844 F

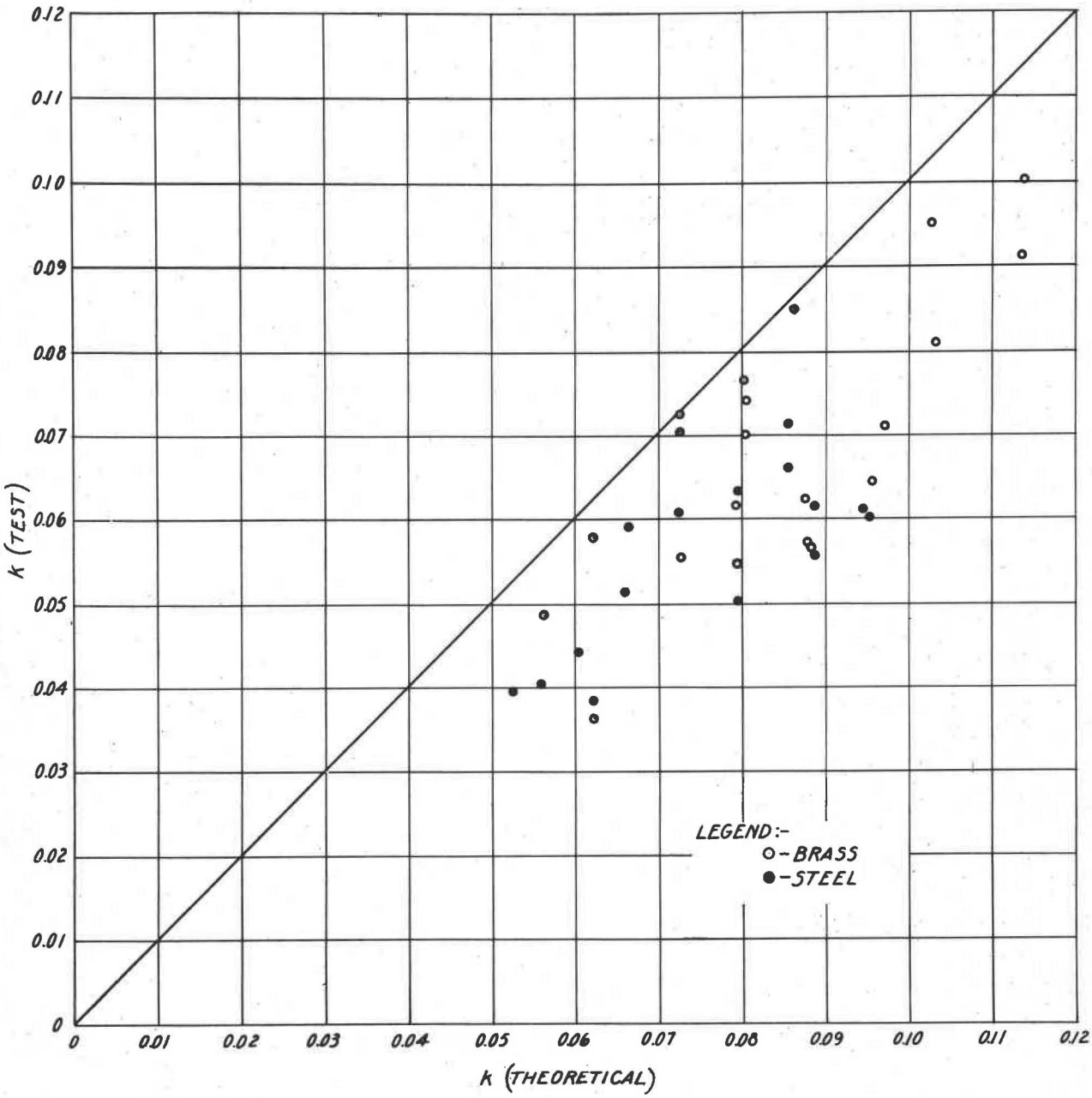

Figure 15.--Relationship of observed to theoretical torsion buckling constants for thin-walled cylinders of isotropic materials. Test data were taken from NACA report No. 479, "Stability of thin-walled tubes under torsion" by L. H. Donnell. Theoretical values were computed by the mathematical analysis presented in this report.

Z M 61845 F

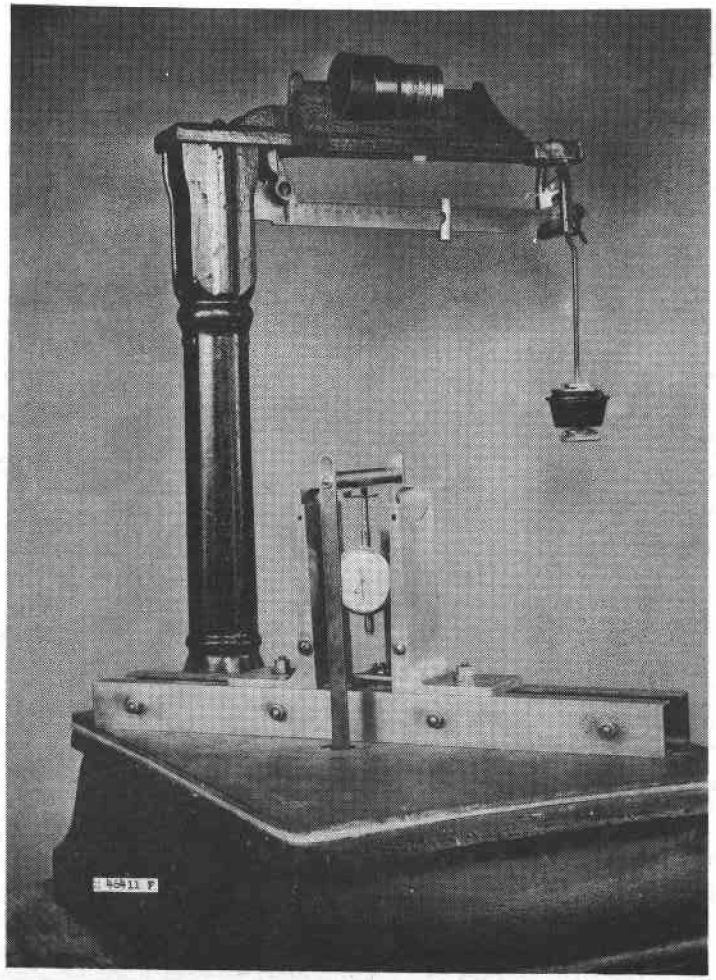

Figure 16.--Bending test of a plywood specimen on a platform-scale apparatus.

Z M 48829 F

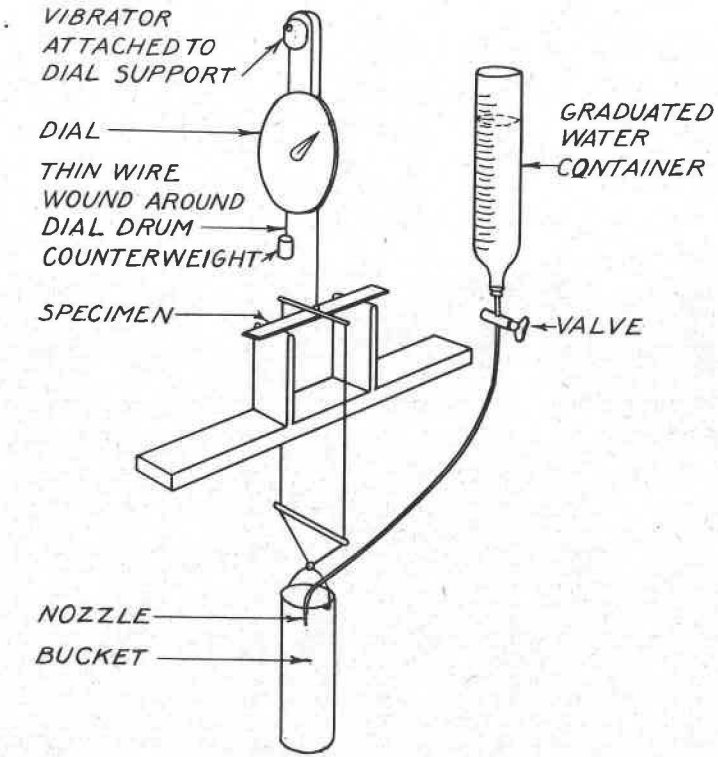

Figure 17.--Apparatus for bending tests of plywood specimens not stiff enough to be tested on the platform-scale apparatus of figure 16.

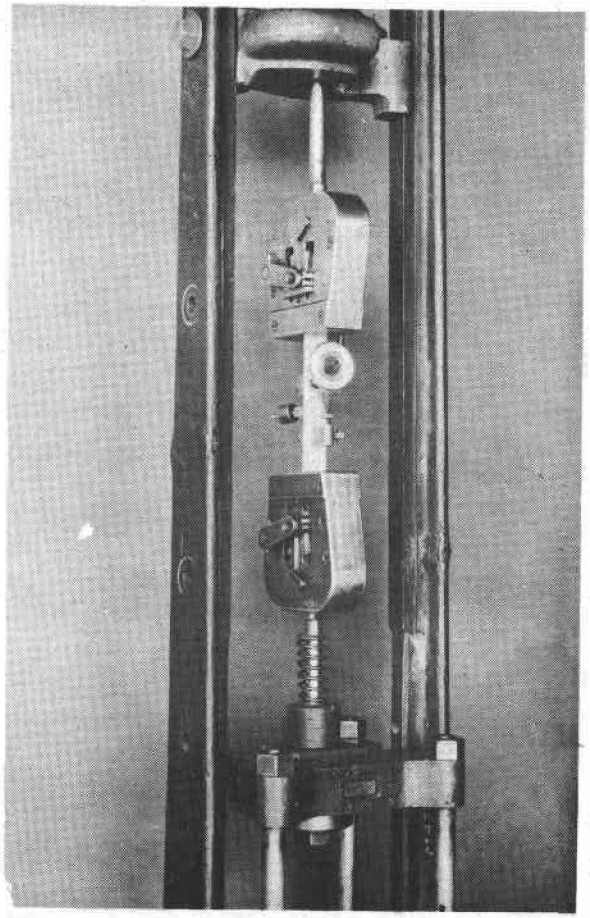

Figure 18.--Tension test of plywood.

ZM 48830 F

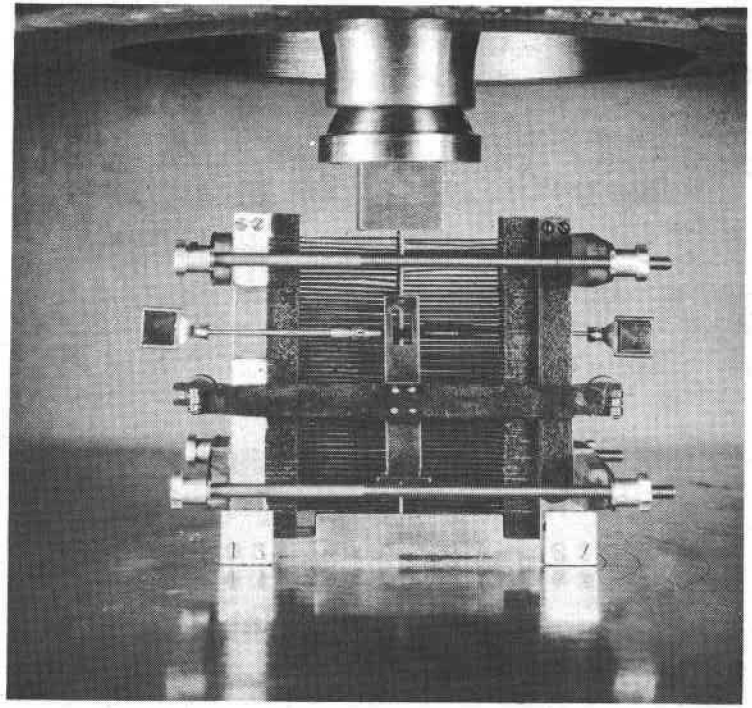

Figure 19.--Compression test of thin plywood.