AN ABSTRACT OF THE THESIS OF

Pricha Leelanukrom for the degree of Master of Science in Electrical and Computer Engineering presented on October 11,1985

Title: **HARMONIC CURRENTS IN STATIC VARS COMPENSATORS**

Abstract approved: Redacted for Privacy
G.C. Alexander

General background and theory of Static Vars Compensators (SVC) are presented. Basic structure and advantages-disadvantages of SVC are also introduced. Harmonic currents generated by SVC are explained. One three phase system is used as a study case. Optimal capacitances and inductances of SVC are calculated for the study case. Data cases of the EMTP (Electromagnetic Transient Program) are shown, including the Line Constant Routine data cases for single phase and three phase transmission lines. Voltage and current waveforms of phase A-B of three-phase, unbalanced load system are analyzed. Fourier Analysis of SVC inductive currents of single phase, three phase unbalanced, and three phase balanced load systems are presented. Magnitude and inductive reactance of SVC of phase A-B of three phase unbalanced load system as functions of the firing angle (α) are derived. Effects of harmonic currents to the system are explained. The EMTP printouts of each data case in this thesis are contained in Appendices.

HARMONIC CURRENTS
IN
STATIC VARS COMPENSATORS

by

Pricha Leelanukrom

A THESIS

Submitted to

Oregon State University

in partial fulfillment of

the requirements for the

degree of

Master of Science

Completed October 11, 1985

Commencement June 1986

APPROVED:

Redacted for Privacy

Professor of Electrical and Computer Engineering
in charge of major

Redacted for Privacy

Head of Department of Electrical and Computer
Engineering

Redacted for Privacy

Dean of Graduate School

Date thesis is presented October 11, 1985

Typed by Pricha Leelanukrom for Pricha Leelanukrom

ACKNOWLEDGEMENT

I would like to express my great gratitude to my major advisor, Dr. G.C. Alexander for his advice and guidance throughout my research work. I also wish to thank Dr. H.K. Lauw for his special advice about the EMTP.

I am deeply grateful to my parents for their never ending love, encouragement and financial support.

My sincere appreciation to all of my friends who encourage and comfort me through the past two years.

My special thank to:

Mr. Thit Siriboon.

Miss Kesvalee Vorapaluk.

Mr. Kanate Srisupaat.

TABLE OF CONTENTS

I. INTRODUCTION 1
- 1.1 General Background of Static Vars Compensators (SVC) 1
- 1.2 Purposes of SVC 1
- 1.3 The Basic Structure of SVC 3
- 1.4 The Advantages of SVC 7
- 1.5 The Harmonic Currents-a Disadvantage of SVC 8
- 1.6 System Simulation by the EMTP 11
- 1.7 Materials in Thesis 13

II. DIGITAL SIMULATION 15
- 2.1 Calculation of the Capacitances and the Inductances in SVC 15
- 2.2 System Design 18
  - 2.2.1 Descriptions of Assumed Load 19
  - 2.2.2 Assumed Transformer Rating 19
  - 2.2.3 Descriptions of Assumed Transmission Line 21
  - 2.2.4 Voltage Source Rating 21
- 2.3 Capacitance and Inductance Optimization 24
  - 2.3.1 Phasor Diagram Explanation 24
  - 2.3.2 Optimize the capacitances and the inductances 24
- 2.4 Simulation of the Power System by the EMTP 30
  - 2.4.1 Line Constants Routine 30
  - 2.4.2 Main Data Case 30
- 2.5 Results from the EMTP 31
- 2.6 Fourier Analysis of the Currents and the Voltages of SVC by the EMTP 31

III. ANALYSIS OF THE HARMONIC CURRENTS 42
- 3.1 Characterestics of the Harmonic Currents 42
  - 3.3.1 Relationship between the magnitudes of the Harmonic Currents and the firing angle (α). 42
- 3.2 Reduce the Harmonic Currents by Filtering 54
  - 3.2.1 Filter Design 54
- 3.3 Result after Filtering 56
- 3.4 Effect to the system 65

IV. CONCLUSION 67

BIBLIOGRAPHY 70

APPENDICES
- APPENDIX A Calculation of the SVC Susceptance 71

APPENDIX B	Format of the Line Constants Routine		74
	Data Case B1.	Single Phase Transmission Line	77
	Data Case B2.	Three Phase Transmission Line	79
APPENDIX C	Data Case C1.	Line Constants Routine Output for Single Phase Transmission Line	82
	Data Case C2.	Line Constants Routine Output for Three Phase Transmission Line	86
APPENDIX D	Format of The Main Data Case		88
	Data Case D1.	Single Phase System	92
	Data Case D2.	Three Phase, Unbalanced Load System	95
	Data Case D3.	Three Phase, Balanced Load System	99
APPENDIX E	Data Case E1.	Output of Single Phase System	104
	Data Case E2.	Output of Three Phase Unbalanced Load System	117
	Data Case E3.	Output of Three Phase Balanced Load System	124
APPENDIX F	Waveforms Analysis for Single Phase system		138
APPENDIX G	Format of The Fourier Analysis		149

LIST OF FIGURES

Figure		Page
1.1	Basic structure of SVC	4
1.2	Voltage and Current waveforms in SVC Unit	6
2.1	System One-Line Diagram	16
2.2	Single phase Transformer Model	20
2.3	Three phase Transformer Model	22
2.4	Transmission Line Configuration	23
2.5	Three phase Voltage Source with Series Reactance connected to Transmission Line	25
2.6	Phasor Diagram of Voltage and Current in SVC	26
2.7	Schematic diagram of Three phase SVC Connected to System	29
2.8	Complete circuit of Single phase System (Phase AB of Three phase balanced load system)	32
2.9	Voltage across SVC of Single Phase System (Phase AB of Three phase Balanced load system)	33
2.10	Grid Signals of SCR's (for every Data Case)	34
2.11	Voltage across the inductor of Single Phase System (Phase AB of three phase unbalanced load system)	35
2.12	Current through the inductor of the single phase system	36
2.13	Voltage across the SVC's of the single phase system	37
2.14	Voltage across the Capacitor of the single phase system	38

2.15	The SVC current of single phase system	39
3.1	The equivalent circuit for analyzing the single phase TCR.	43
3.2	The SVC current of phase AB of three phase balanced load system.	59
3.3	The SVC current of phase BC of three phase balanced load system.	60
3.4	The SVC current of phase CA of three phase balanced load system.	61
3.5	The SVC currents of three phase balanced load system after filtering.	62
3.6	Three phase line voltages before filtering (three phase balanced load system)	63
3.7	Three phase line voltages after filtering (three phase balanced load system)	64

LIST OF TABLES

Table		Page
2.1	the capacitance and inductance of each phase.	27
3.1	the results of harmonic currents before and after filtering.	57

LIST OF SYMBOLS

a	cosine coefficient of Fourier Series
b	sine coefficient of Fourier Series
B	susceptance
$B^{(c)}$	susceptance of compensator
C	capacitance
f	frequency in the unit of Hz
G	conductance
i	instanteneous value of current
$\underline{I}$	phasor quantity of current
$\underline{I}^*$	conjugate of current phasor
L	inductance
P	real power
Q	reactive power
Q1, Q2	thyristors (SCR)
R	resistance
t	instanteneous time
T	time period
V	instanteneous value of voltage
Y	admittance
Z	impedance
	firing angle
	angular frequency

Subscripts

A, B, C	phase A, phase B, phase C
AB, BC, CA	phase AB, phase BC, phase CA
c	thyristors
L,5	current of inductor due to 5th harmonic
n	n^{th} harmonic
n,5	n^{th} harmonic due to 5th harmonic
ref	reference level
0	d.c. level of Fourier Series
1L,T	fundamental component of total current of inductor
1	fundamental frequency
5	5th harmonic

HARMONIC CURRENTS IN STATIC VARS COMPENSATORS

I. INTRODUCTION

1.1 GENERAL BACKGROUND OF THE STATIC VARS COMPENSATORS (SVC)

The reactive component of the current consumed by a user - when such a component exists - determines, as is well known, a higher r.m.s. current than what is strictly necessary for supplying the active energy. It, hence, leads to an increase in Joule effect (heating) losses throughout the entire electricity generation and transmission system. This means that a penalty is set by utilities for values of the power factor which are too low. Furthermore, the inductive component of the current flowing through the impedance of the power supply system is, to a great extent, responsible for the voltage drop at the load terminals. When the value of this component becomes fairly high, the voltage drop which it causes may turn out to be inconvenient, or even prohibitive, for the satisfactory operation of the user's installation [6].

1.2 PURPOSES OF SVC

Compensating equipment can be applied in order to solve these problems (for instance, keep the transmissions losses of existing lines as low as possible, keep the voltage profile of the transmission system within tight limits under all operational and fault conditions, improve the power factor

in the system by cancelling the reactive power (VAR) demand of load, etc.) [5]. The Static Vars Compensator (SVC) is one form of compensating equipment which is convenient for solving these kinds of problems. The voltage support can be achieved by the rapid control of the SVC reactance; and, thus, its reactive power output. Thereby, the reactive current flow is controlled in the transmission lines; which means that we are able to control (or regulate) the transmission voltage at a given terminal and to provide power factor correction [2]. To reduce the voltage flicker, the SVC must be used in order to keep the voltage regulation at a minimum and the system power factor close to unity.

The Static Vars Compensator (SVC) is also used in utility applications to support the voltage of transmission lines during disturbances of both loads and generation. Thereby, the reactive current flow is controlled in the transmission lines [3].

Static Vars Compensators (SVC) are essentially controllable VAR sources - or VAR generators - functionally similar to the traditional rotating synchronous condenser. Several types of static compensators, with different operating features, can be realized using various power conversion concepts and thyristor circuits [3].

The SVC as used for transmission line compensation usually employs thyristor-controlled reactors(TCR) in conjunction with a fixed or conventionally switched capacitor (fixed capacitor, thyristor-controlled reactor-- FC-TCR). Recently,

a new type of VAR compensator has been developed for utility applications that employs thyristor-switched capacitors in conjunction with thyristor-controlled reactors (thyristor-switched capacitor, thyristor-controlled reactor -- TSC-TCR) [2].

Only the fixed capacitor, thyristor-controlled-reactor types(FC-TCR), that is those which essentially function as variable reactances (capacitive and inductive impedances), are considered here. The basic compensation principles are to require the generation of controllable VARS to supply the reactive and negative-sequence load currents (load compensation) or to induce an appropriate voltage across the ac system impedance to regulate the terminal voltage (voltage support) [3].

1.3 THE BASIC STRUCTURE OF SVC

The basic structure of an SVC consists of a parallel connection of a fixed capacitor with a thyristor-controlled reactor (TCR) using antiparalled thyristors as shown in Figure 1.1.

By varying the conduction angle of the thyristors, the SVC system functions as a variable reactance operated in both the inductive and capacitive domains; and, thus, provides a wide range of reactive power (VAR) output [4]. The magnitude of the effective ac impedance of the inductor is continuously controllable, by the technique of phase delay, between infinity and the actual impedance, L, of the inductor. In other words, SCR Q1 and Q2 control the magnitude of fundamental

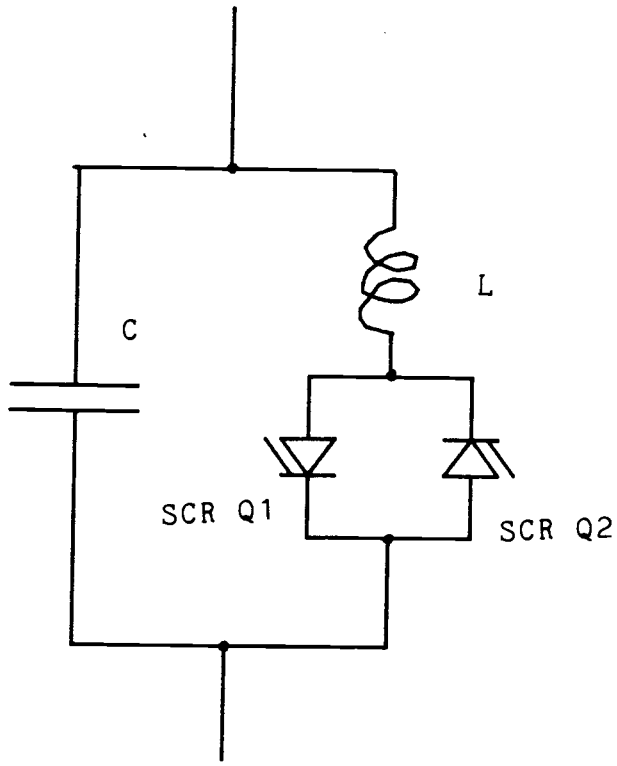

Figure 1.1 Basic Structure of SVC.
Q1, Q2 control the magnitude of fundamental current through the inductor by adjusting the firing angle.

(60 Hz.) of the current through the inductor. Because of constant voltage across the SVC, the impedance of the inductor will be controlled corresponding to the magnitude of current. The explanation will be expanded by the phasor diagram in Chapter II.

For instance, assume initially that the absolute value of the impedance of the inductor and that of the capacitor at the fundamental frequency of 60 Hz are the same ($\omega L=1/\omega C$). At some non-zero, leading VAR demand, the closing of the switch is appropriately delayed by a variable angle(firing angle), α, with respect to the peak of the supply voltage in order to reduce the current in the inductor. With increasing firing angle ($0<\alpha<90^\circ$), the inductive current decreases, as illustrated in Figure 1.2, and consequently, the leading VARs provided for the ac system increase. At maximum leading VAR demand, the switch is open ($\alpha=90^\circ$), the current in the inductor is zero; and, therefore, the maximum rated capacitive current is drawn from the ac system. It is evident that the worst case response time for this scheme is one-half of a cycle since can be set at every half cycle [4]. The current in the reactor, and thereby the total compensating current, is varied by firing (or delay of conduction) angle control. Thus, the Fixed Capacitor-Thyristor Controlled Reactor (FC-TCR) type compensator may be considered to consist of essentially a variable reactor (controlled by delay angle..) in parallel with a fixed capacitor. (In practice, the fixed capacitor is usually replaced with a filter network that has

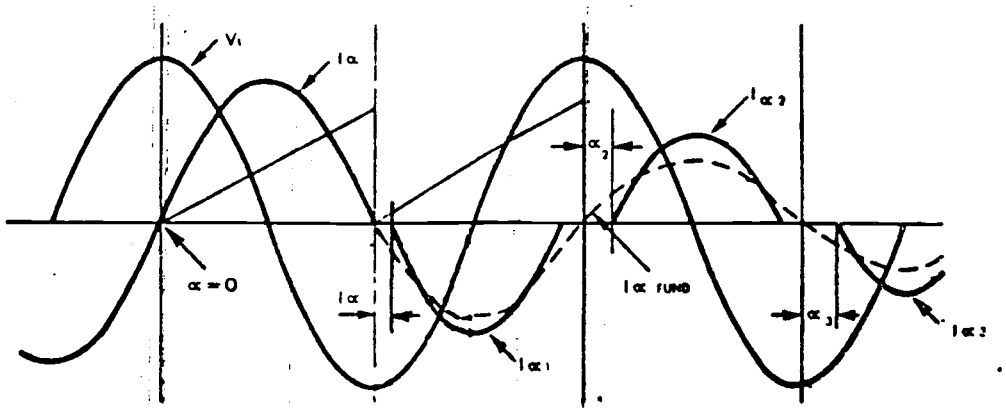

Figure 1.2 Voltage and Current waveforms in SVC.

the required capacitive impedance at the fundamental frequency but it exhibits a low impedance at selected frequencies to absorb the dominant harmonics) [2].

1.4 THE ADVANTAGES OF SVC

In the case of a synchronous machine, the value of the excitation may be altered. However, if the variations undergone are abrupt, frequent and considerable (e.g., those due to the operation of an electric arc furnace, or a reversible rolling-mill driven by a d.c. motor fed from a thyristor rectifier power supply), it cannot satisfy requirements for rapid dynamic response [5]. Although rotating synchronous condensers have been used in flicker reduction, their wide application has been hindered by their inherent shortcomings in response time, their inability to supply unbalanced VAR demand, by their relatively high price and the need for regular maintenance [8].

The SVC solves the problem equally well (i.e., that of compensating for abrupt and frequent changes in the reactive energy) due to their excellent dynamic properties [5]. An advantage of an SVC is that neither rotating machines with their massive foundations nor the work of servicing them when operational is required. Furthermore, energy losses when they are used are generally well below those which would be incurred by a synchronous compensator.

In addition, an SVC may be constructed so as to supply the installation with the harmonic components of the current

required by rectifiers or arc furnaces, if the installation includes any. It thus makes it possible to suppress the distortion of the voltage waveform which would be inevitable if the harmonic components of the current had to be supplied by the power system and flow through its reactances. The advantages of the SVC can be summarized as follow:

a. Designed for flicker control, voltage support and power factor correction.

b. Fast (one-half cycle) response time.

c. No start-up time such as needed by the synchronous compensator.

d. Separate, independent phase control.

e. Continuously variable leading and lagging VARs can be provided.

f. Perfect compensation for any unbalanced load is theoretically possible.

g. The thyristor switch is inherently protected against voltage transients and surge currents.

h. Reduced maintenance [8].

1.5 THE HARMONIC CURRENTS-A DISADVANTAGE OF THE SVC

Where continuous power control is necessary, Thyristor-Controlled Reactors (TCR) with shunt capacitors frequently find application. The constant leading reactive power made available by the capacitors is reduced by the variable lagging reactive power of the TCR. Besides the fundamental current, which can be varied by way of the firing

angle, the TCR also generates various harmonic currents, some of which have to be prevented from reaching the supply system by tuned series-resonance circuits. These filter circuits act capacitively with respect to the fundamental and are often designed such as to make available the total leading reactive power. Figure 1.3 shows one phase of such a reactive power compensation unit.

As already stated, the TCR generates harmonic currents that flow through the supply system and the filter circuits. Because of the system's limited short circuit power, this gives rise to voltage harmonics which, in turn, influence the harmonic currents of the TCR. By considering this hitherto neglected influence, it is possible to arrive at a more accurate judgement of the effect of harmonic distortion on the supply system and the harmonic currents of the filter [7]. Other voltage harmonics that appear in the supply system derive from electrical equipment with a nonlinear characteristic; e.g., static converters or saturated ferromagnetic circuits. Switching operations within the supply system, or stochastic events such as occur in arc furnaces, produce fractional voltages whose frequencies are no longer integral multiples of the fundamental. The TCR reacts to the sum of all the voltages with additional currents that either reduce or increase these fractional voltages.

Phase control inherently generates odd harmonics, the amplitudes of which are a function of firing angle. In a balanced, delta-connected three phase system, the third

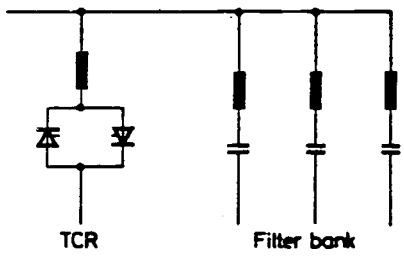

Figure 1.3 Single Phase Reactive Power Compensator Unit.

harmonic will not flow in the power lines. However, in considering the general case of unbalanced reactive power consumption, the third harmonic current will flow in the lines. This, together with the fifth and seventh harmonic currents, must be filtered. This can readily be accomplished by splitting the fixed capacitor bank into sections and tuning these sections with appropriate inductors to provide notch filters at the harmonic frequencies.

The harmonic currents are introduced into the system to which the SVC is connected. The amplitude of the harmonic currents produced is a function of the conduction angle . If the positive and negative current half cycles are identical, only odd harmonics are generated. The harmonic currents are highly undesirable and should be kept to a minimum consistent with reasonable cost. By connecting the TCRs in delta, the triplet harmonic currents (3rd, 9th,...) can, under ideal conditions, only circulate inside the delta and cannot enter the system [4].

1.6 SYSTEM SIMULATION BY THE EMTP

In order to study the harmonic currents in SVC, a simulation model of the SVC system is employed. Digital simulation of the thyristors and the power system can be achieved by using the Electromagnetic Transient Program (EMTP) including Transient Analysis of Control Systems (TACS) developed by the Bonneville Power Administration. The objectives of the thesis:

a. Study the characteristic of the harmonic currents.

b. Determine the effect of harmonic currents to the system.

c. Design filters for eliminating harmonic currents.

The steps in order to complete the study are:

a. Design the three phase system.

b. Calculate the susceptances of SVC.

c. Choose the capacitances and inductances of SVC.

d. Predict results for three phase balanced load system.

e. Set up the Data Case for the EMTP.

f. Run the EMTP program.

g. Study the results before filter are added.

h. Design filters for the system.

i. Run the EMTP Program.

j. Study the results after filters are added.

k. Compare the results before and after filtering.

The results (before filters are added) from the EMTP (by the Fourier Analysis Routine in the EMTP) show that a lot of harmonics are generated in the line voltages and line currents (line voltages and line currents are nonsinusoidal) which are undesirable for the power system. After the R-L-C filter circuits are added to each phase of the three phase system, the magnitudes of harmonic contents of line voltages and line currents are approximately zero (compare with the magnitudes of the fundamental components of each phase which means the line voltages and line currents are approximately sinusodal.

1.7 MATERIALS IN THESIS

This thesis contains:

a. The general background of the Static Vars Compensator including the advantages and disadvantage of the SVC, and the harmonic current generated by the SVC are in Chapter I.

b. Chapter II presents the system study case (single phase and three phase balanced and unbalanced load) including the capacitances and the inductances calculation, the data cases set up for the EMTP, the Fourier Analysis by the EMTP.

c. Chapter III the characteristic of harmonic current is studied by using the Fourier Coefficients from the Fourier Analysis by the EMTP, the elimination of the harmonic currents by the R-L-C series resonance circuits.

d. Chapter IV presents the conclusion of the thesis and the knowledge from studying the harmonic currents, the errors and the asumptions used in calculation.

In Appendix A. contains the example of the calculation for the susceptances of SVC.

Appendix B. shows the Line Constants Routine Data Cases for single phase (Data Case B1) and three phase transmission lines (Data Case B2).

In Appendix C. the outputs of the single phase, and three phase transmission line which are stored on LUNIT 7 are shown.

Appendix D. shows the format of the main data case. The single phase system, unbalanced three phase load system

and balanced three phase load system data cases (Data Case D1, D2, D3) are also shown in Appendix D.

Appendix E contains the outputs for each data case of appendix D.

In Appendix F, the waveform analysis of single phase system (Data Case D1) are shown as an example.

In Appendix G, format of the EMTP Fourier Analysis is shown. Results of Fourier Analysis of the SVC currents and line voltages before and after filtering for the three phase balanced load system are also shown.

II. DIGITAL SIMULATION

In order to study the harmonic currents in the SVC, a three phase system was chosen as the study case. For making the uncomplicated study case, this system only contains one three phase voltage source in series with reactances, a three phase transmission line, one wye-wye connected transformer, and one three phase, unbalanced, wye-connected load. The wye-wye connected transformer is used for determining the worst effect of harmonic currents to the system. Digital simulation (EMTP: The Electromagnetic Transient Program) is used as a tool to represent the system.

The system one line diagram is shown in Figure 2.1.

2.1 CALCULATION OF THE CAPACITANCES AND THE INDUCTANCES IN SVC

Because general load situation treated by vars control is three phase unbalanced load, the three phase SVC are used for load compensation. The value of compensation required for each phase is calculated by using the equations:

$$B_{AB}^{(c)} = -B_{AB}+(G_{CA}-G_{BC})/\sqrt{3} \tag{2.1}$$

$$B_{BC}^{(c)} = -B_{BC}+(G_{AB}-G_{CA})/\sqrt{3} \tag{2.2}$$

$$B_{CA}^{(c)} = -B_{CA}+(G_{BC}-G_{AB})/\sqrt{3} \tag{2.3}$$

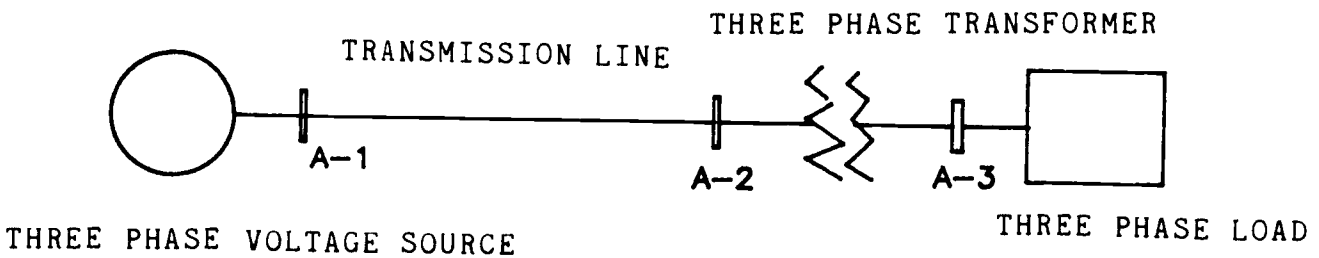

Figure 2.1 System One-Line Diagram.

and

$$B^{(C)}_{AB} = \omega C_{AB} - 1/(\omega L_{AB}) \tag{2.4}$$

$$B^{(C)}_{BC} = \omega C_{BC} - 1/(\omega L_{BC}) \tag{2.5}$$

$$B^{(C)}_{CA} = \omega C_{CA} - 1/(\omega L_{CA}) \tag{2.6}$$

where

$B^{(C)}_{AB}$, $B^{(C)}_{BC}$, $B^{(C)}_{CA}$ are the required compensators of each phase for a delta-connected load;

B_{AB}, B_{BC}, B_{CA} are the load susceptances of each phase of a delta-connected load;

G_{AB}, G_{BC}, G_{CA} are the load conductances of each phase of a delta-connected load.

Equations (2.1) to (2.6) come from ref.[3] and are based upon no thyristor in the SVC branch; which means the SVC current is sinusoidal. In other words, both thyristors are on all the time. In order to use the thyristors and make the equations valid, the thyristor operating points must be close to continuous conduction in order to make the SVC current close to sinusoidal. This also means that the "turn-off" times of the thyristors must be very small.

For reducing the triplet harmonic, the model dealt with the SVC will be delta connection. Equations (2.1) to (2.3) are based on a three-phase, delta-connected load. Hence, the load is wye-connected; wye-delta transformation for the

load is required by the equations:

$$Z_{AB} = (Z_A Z_B + Z_B Z_C + Z_C Z_A)/Z_C \tag{2.7}$$

$$Z_{BC} = (Z_A Z_B + Z_B Z_C + Z_C Z_A)/Z_A \tag{2.8}$$

$$Z_{CA} = (Z_A Z_B + Z_B Z_C + Z_C Z_A)/Z_B \tag{2.9}$$

The equivalent admittance of the delta connected loads of each phase are,

$$Y_{AB} = 1/Z_{AB} \tag{2.10}$$

$$Y_{BC} = 1/Z_{BC} \tag{2.11}$$

$$Y_{CA} = 1/Z_{CA} \tag{2.12}$$

From the equation

$$Y = G+jB \tag{2.13}$$

where Y is an admittance

G is an conductance

B is an susceptance,

the conductances and susceptances of the three phase load after Wye-Delta transformation can be determined.

The calculations are shown in Appendix A.

2.2 SYSTEM DESIGN

In a three phase system, the ratings of all components in the system have to be calculated in such a way that all ratings must corresponds to each other.

2.2.1 Description of Assumed Load:

Three phase unbalanced load 1 per unit, 0.8 lagging power factor in phase A, 0.75 lagging power factor in phase B, 0.7 lagging power factor in phase C, grounded system, 3 MVA, 4.6 $KV_{line-line}$.

Base impedance $= (4.6^2)/_3 = 7.053$ ohms

The load impedances in each phase (phase A, phase B, and phase C) in per unit quantities must be changed into the unit of ohm in order to be used in the EMTP data cases. Therefore,

load impedance of phase A (Z_A) = 5.64+j4.232 ohms

load impedance of phase B (Z_B) = 5.29+j4.665 ohms

load impedance of phase C (Z_C) = 4.94+j5.037 ohms

2.2.2 Assumed Transformer Rating:

Assume: the model of the three phase transformer is three single phase transformers connection.

Grounded, Wye-Wye connected, 12 MVA, 12:4.6 KV_{l-l}.

Leakage impedance of an XFMR = 0.002+j0.02 p.u.

Magnetizing admittance of an XFMR = 0.005-j0.02 p.u.

The model of each single phase transformer is shown in Figure 2.2.

From the per unit values of the transformer elements, the parameter values in the unit of ohm are calculated:

Base impedance of high voltage side = 12.000 ohms

Base impedance of low voltage side = 1.7633 ohms

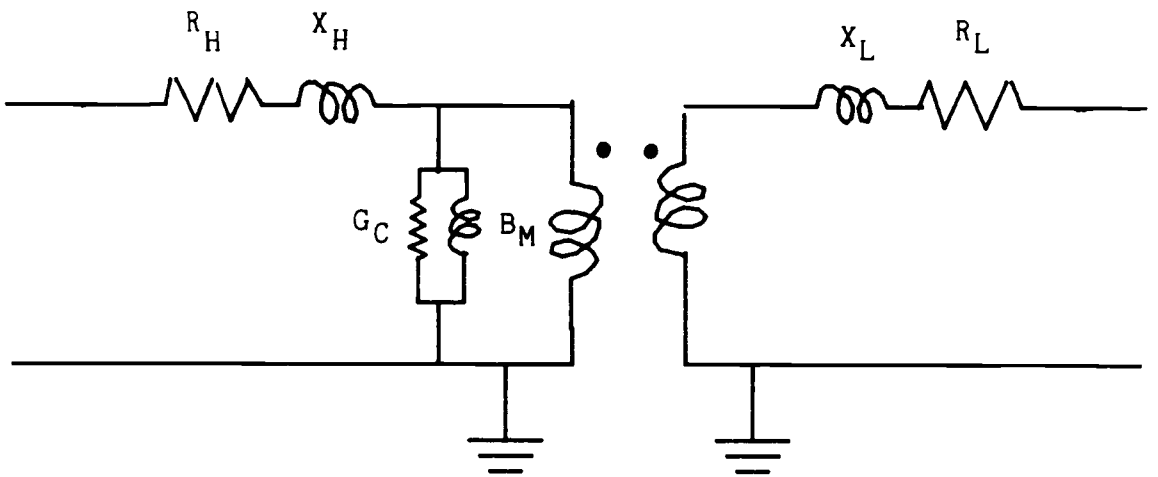

Figure 2.2 Single phase Transformer Model.

Therefore,

Leakage impedance of high voltage side

= 12*(0.002+j0.02) ohms

= 0.024+j0.24 ohms

Leakage impedance of low voltage side

= 1.7633*(0.002+j0.02) ohms

= 0.00353+j0.0353 ohms

Magnetizing impedance of the transformer

= $12*[1/(0.005-j0.02)]$ ohms

= 141.1765+j564.7059 ohms

Magnetizing admittance of the transformer

= 0.000417-j0.001667 mhos

The three phase transformer model is shown in Figure 2.3.

2.2.3 Descriptions of Assumed Transmission Line:

solid conductor with an

outside diameter 0.563 inches.

a.c. resistance 0.592 ohms/mile at 60 Hz.

d.c. resistance 0.386 ohms/mile.

transmission line length 10 miles.

Figure 2.4. shows the transmission line cross-section configuration.

The earth resistivity is taken as 100 ohm-meters.

2.2.4 Voltage Source Rating:

Three phase voltage source, grounded, 12 $KV_{line-line}$,

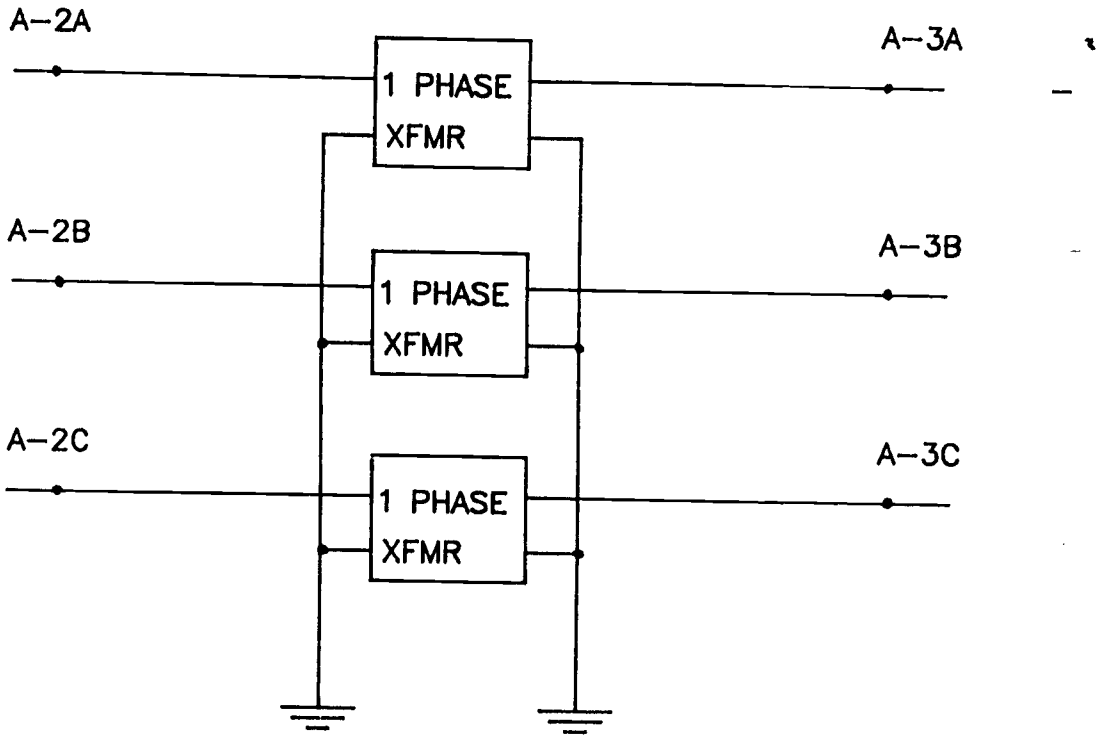

Figure 2.3 Three phase Transformer Model.

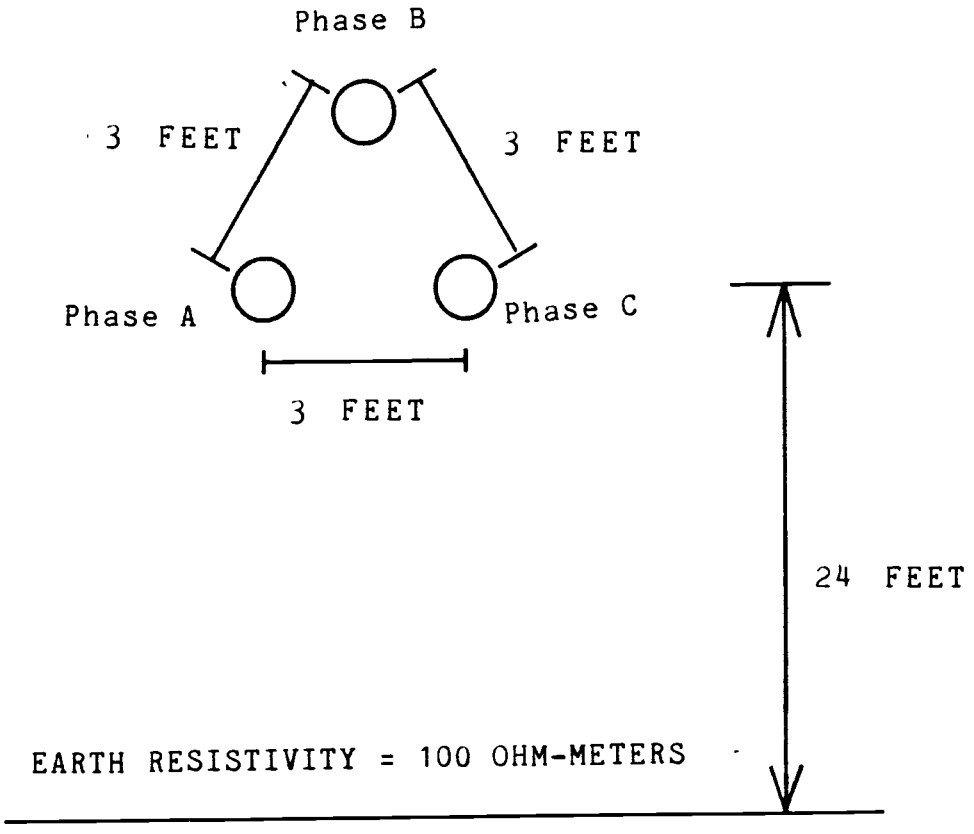

Figure 2.4 Transmission Line Configuration

series reactance =0.0021 ohms.

The circuit of the assumed three phase voltage source is shown in Figure 2.5.

2.3 CAPACITANCE AND INDUCTANCE OPTIMIZATION

The next problem is how to choose the capacitance and the inductance in an SVC.

2.3.1 Phasor Diagram Explanation

Consider the phasor diagram in Figure 2.6. The diagram shows the relationship between the load voltage, the load current, and the SVC capacitive and inductive currents. The magnitude of the inductive current can be controlled by changing the firing angles of the antiparallel thyristors.

Because the phasor diagram is based on the sinusoidal signal at 60 Hz, the conduction angles of the thyristors have to be as close to the continuous conduction angle as possible in order to approximate the inductive current as sinusoidal.

2.3.2 Optimize the capacitances and inductances

In order to optimize the inductances and the capacitances; an assumption must be made. Assume the magnitude of the capacitive current and the maximum value of the magnitude of the inductive current are equal (the magnitude of the inductive current can always be decreased by controlling the thyristor firing angles) and capacitive load is not expected.

Therefore,

$$\omega C = 1/\omega L \qquad (2.14)$$

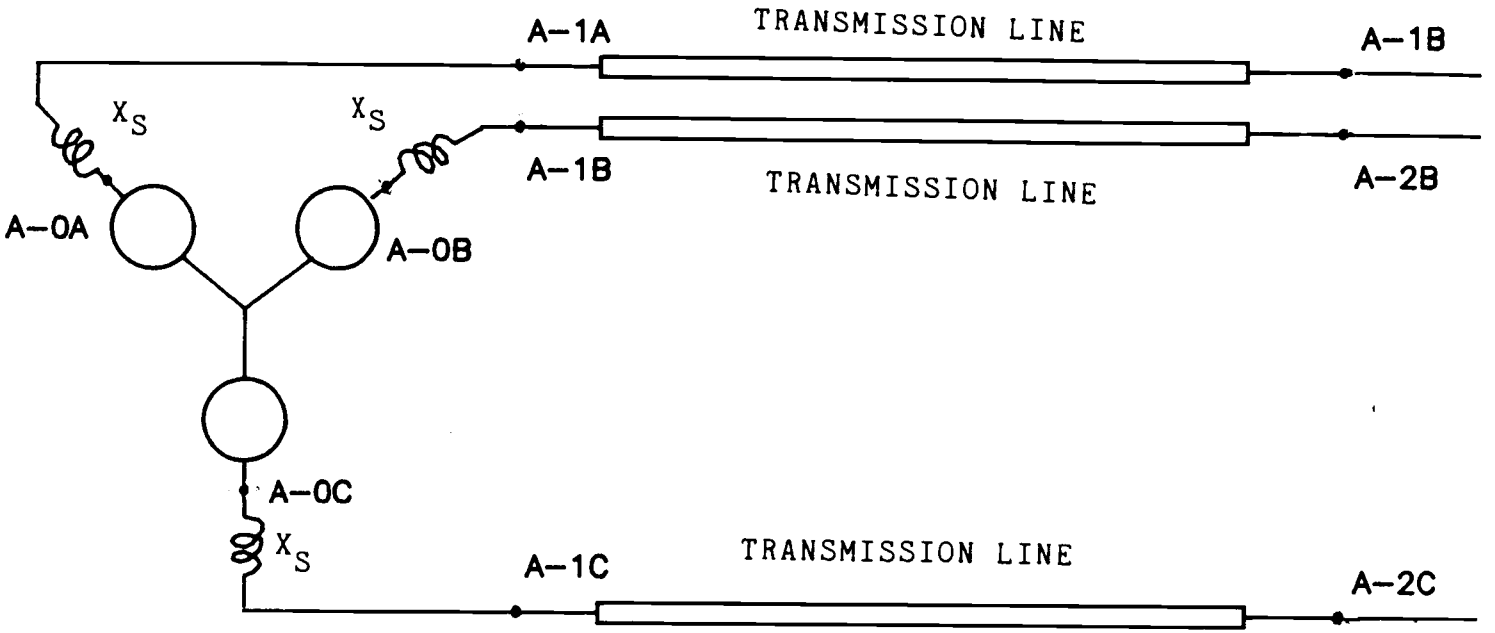

Figure 2.5 Three phase voltage source with series impedance connected with transmission line.

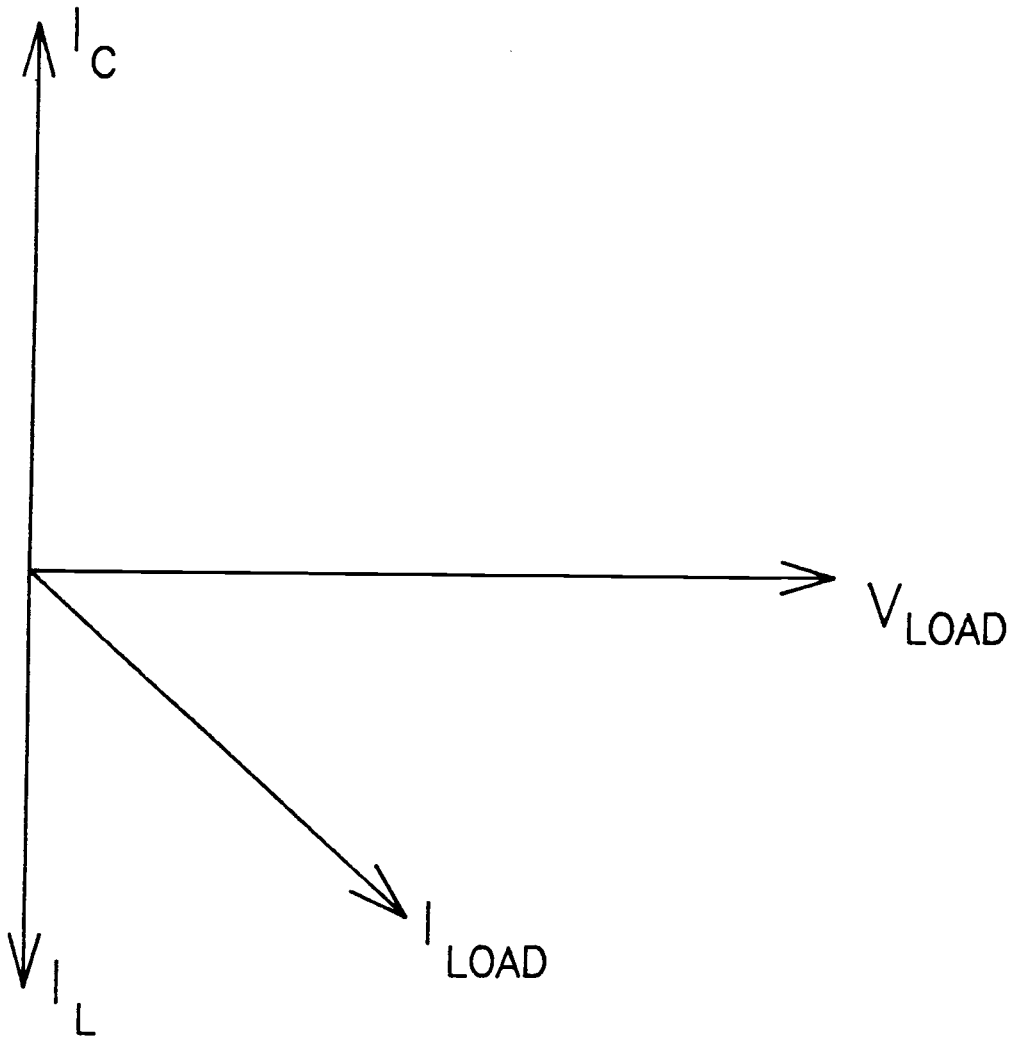

Figure 2.6 Phasor Diagram of Voltage and Current in SVC, based on the fundamental frequency (60 Hz.)

The magnitude of I_L is controlled by the firing angle.

For three phase unbalanced load system, values of the capacitances and inductances of SVC's for each phase are calculated in Appendix A by eq.(2.13) and (2.14).

Table 2.1 shows the capacitance and inductance of SVC of each phase.

Table 2.1: The calculated capacitances and inductances.

Phase	Capacitance (microfarad)	Inductance (millihenry)
AB	41.12	171.134
BC	38.46	151.576
CA	37.14	189.468

The values of capacitance and inductance of each phase can compensate the load of each phase perfectly (makes the power factor unity). For instance, if the capacitance and inductance of the compensator of phase AB are paralleled with the load of phase AB, then the power factor at the transformer output will change from 0.8 to unity; in other words, no thyristor in the SVC branch. The antiparalleled thyristors, which are in series with the inductor can only decrease the

magnitude of the inductive current by delaying the firing angle. If all of the thyristors are off, the compensators only contain the capacitive currents. Range of the power factor of load of each phase which the compensator can compensate are calculated:

From Appendix A, the delta equivalent of assumed load admittances are calculated:

$$Y_{AB} = 0.038-j0.028 \quad \text{mhos}$$
$$Y_{BC} = 0.033-j0.034 \quad \text{mhos}$$
$$Y_{CA} = 0.035-j0.031 \quad \text{mhos}$$

If the load of each phase are

$$Y_{AB} = 0.038-j0.0155 \quad \text{mhos}$$
$$Y_{BC} = 0.033-j0.01449 \quad \text{mhos}$$
$$Y_{CA} = 0.035-j0.01400, \quad \text{mhos}$$

the capacitors alone of the compensators would compensate the load completely (unity power factor obtained).

Therefore, the range of the power factor of load phase A which the compensator can compensate is between 0.933 and 0.8 lagging.

Range of the power factor of load phase B which the compensator can compensate is between 0.915 and 0.75 lagging.

Range of the power factor of load phase C which the compensator can compensate is between 0.917 and 0.7 lagging.

Figure 2.7 shows the schematic diagram of the three

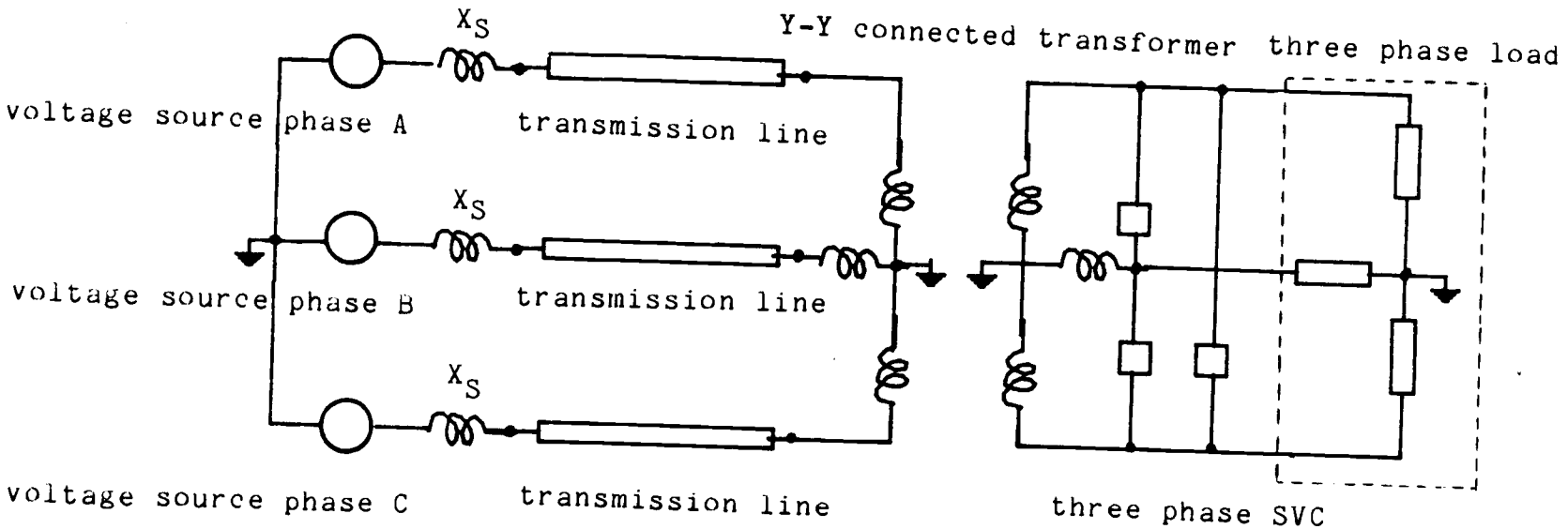

Figure 2.7 Schematic diagram of the Three phase SVC connected to System.

phase SVC connected to the three phase system.

2.4 SIMULATION OF THE POWER SYSTEM BY THE EMTP

The EMTP is a tool for power system simulation. According to the EMTP Rules Book, simulation of the transmission line has to be done first. The result from Line Constants Routine stored on LUNIT 7 will be multiplied by the transmission lengths and inserted into the main data case.

2.4.1 Line Constants Routine

Transmission Line Representation

The format of the Line Constants Routine input data for the single phase and three phase transmission line are shown in Appendix B. The Data Case B1 shows the Line Constants Routine data case of a single phase transmission line (which has the same characteristics and geometry as phase B of three phase transmission line in 2.2.3) and the Data Case B2 shows the Line Constants Routine data case for the three phase transmission line (Figure. 2.4)

Appendix C Data Case C1 shows the Line Constants Routine data case output from the EMTP for the single phase transmission line (Data Case B1) and the output which the EMTP generates and stores on LUNIT 7. Data Case C2 in Appendix C shows the Line Constants Routine data case output on LUNIT 7 for the three phase transmission line (Data Case B2).

2.4.2 Main Data Case

In order to use the output from the Line Constant Routine

for the main data case, the data must be multiplied by the length of the transmission line. Appendix D shows the complete data cases for the single phase system (phase AB of the three phase unbalanced load system, Data Case D1. Figure 2.8 shows the complete circuit of the single phase system), the three phase unbalanced load system (Data Case D2), and the three phase balanced load system (Data Case D3). All include the output from the Line Constants Routine which is inserted into all main data cases (single phase system, three phase unbalanced load system, and three phase balanced load system). The format of the main data case is also shown in Appendix D.

Appendix E shows the outputs from the data cases in Appendix D.

2.5 RESULTS FROM THE EMTP

For the basic idea of the harmonic current in a three phase system, the waveforms of Data Case D1 (phase AB of unbalanced three phase system) are analyzed. Appendix F contains the waveforms analysis of Data Case D1 (the single phase system). Figure 2.8 to Figure 2.15 show the complete single phase system diagram, the waveforms of line voltages, and the waveforms of line currents respectively.

2.6 FOURIER ANALYSIS OF THE CURRENTS AND THE VOLTAGES OF THE SVC BY THE EMTP

In order to study the harmonic current, Fourier Analysis is introduced. The EMTP provides the routine for finding

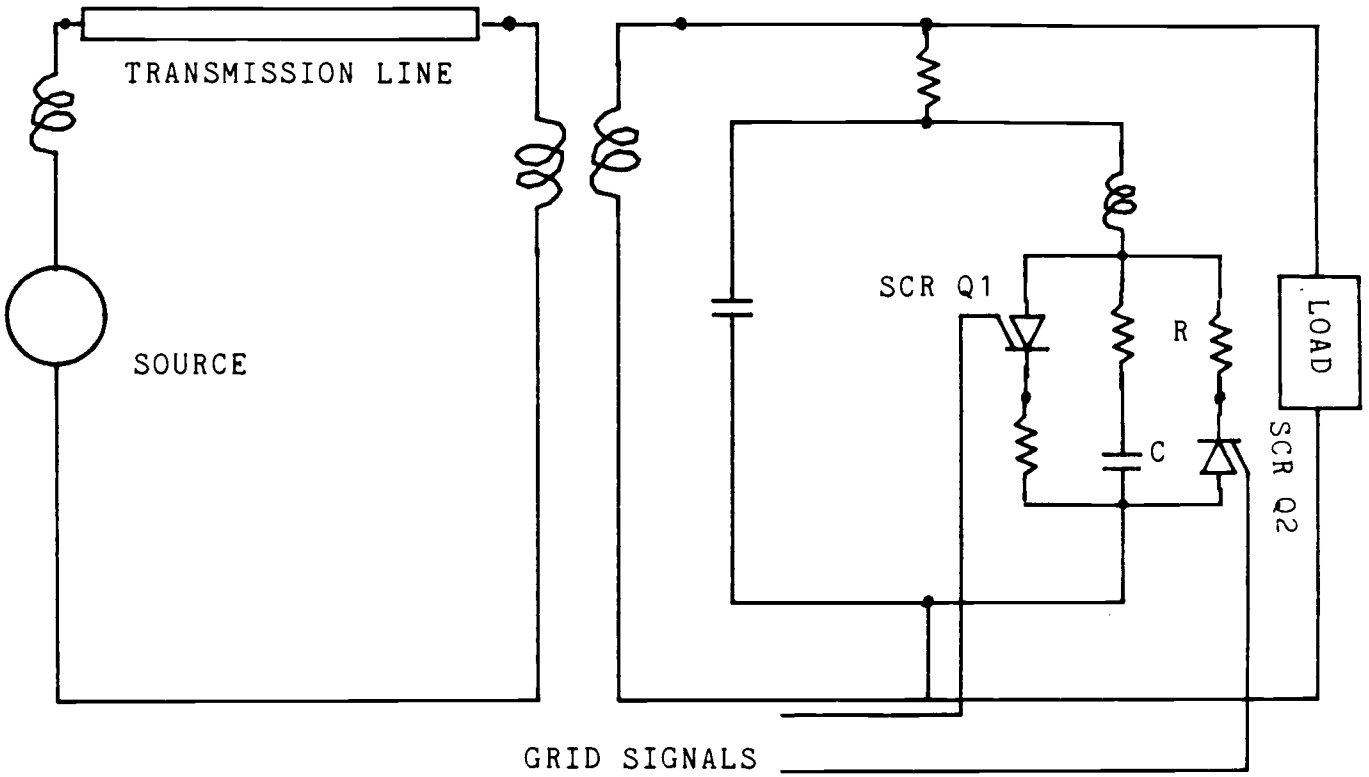

Figure 2.8 Complete circuit of Single phase System.
(Phase AB of three phase unbalanced load system)

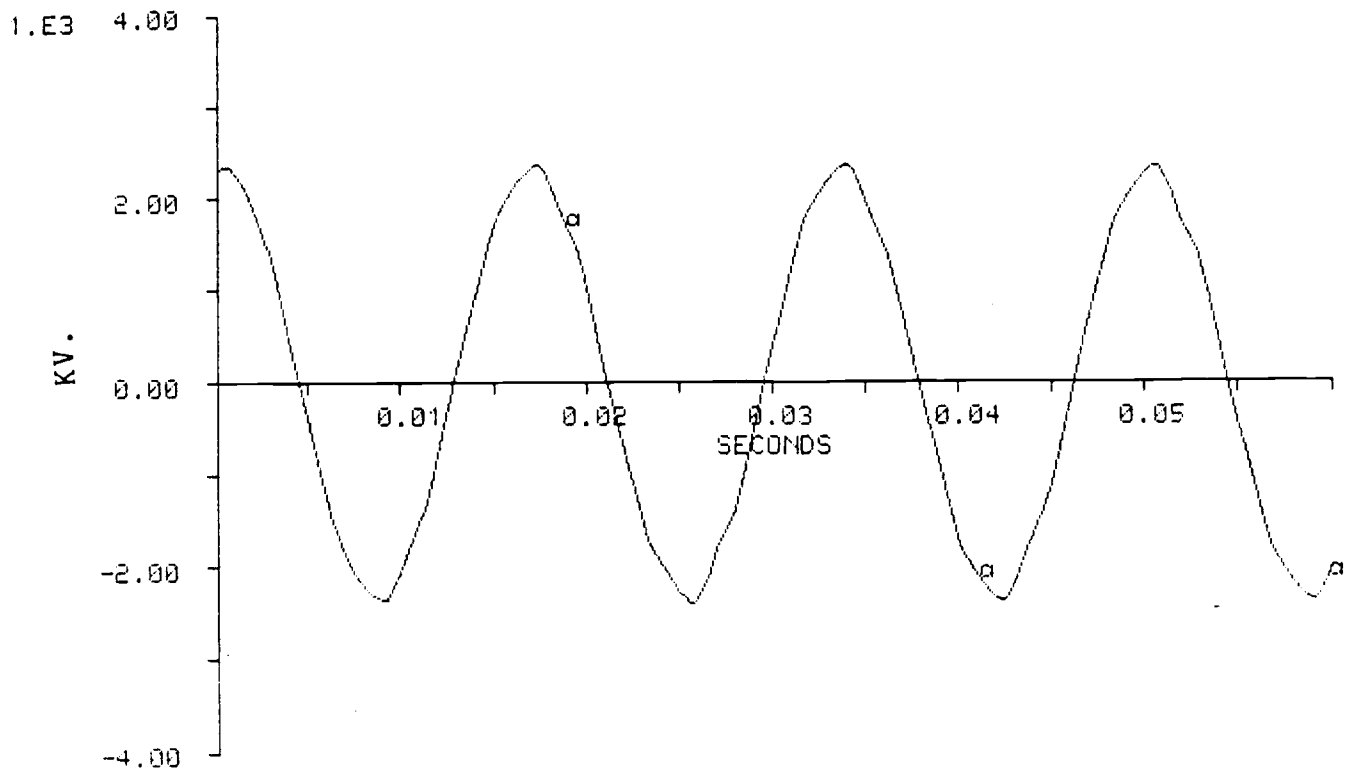

Figure 2.9 Voltage across SVC of Single Phase System.
(Phase AB of three phase unbalanced load system)

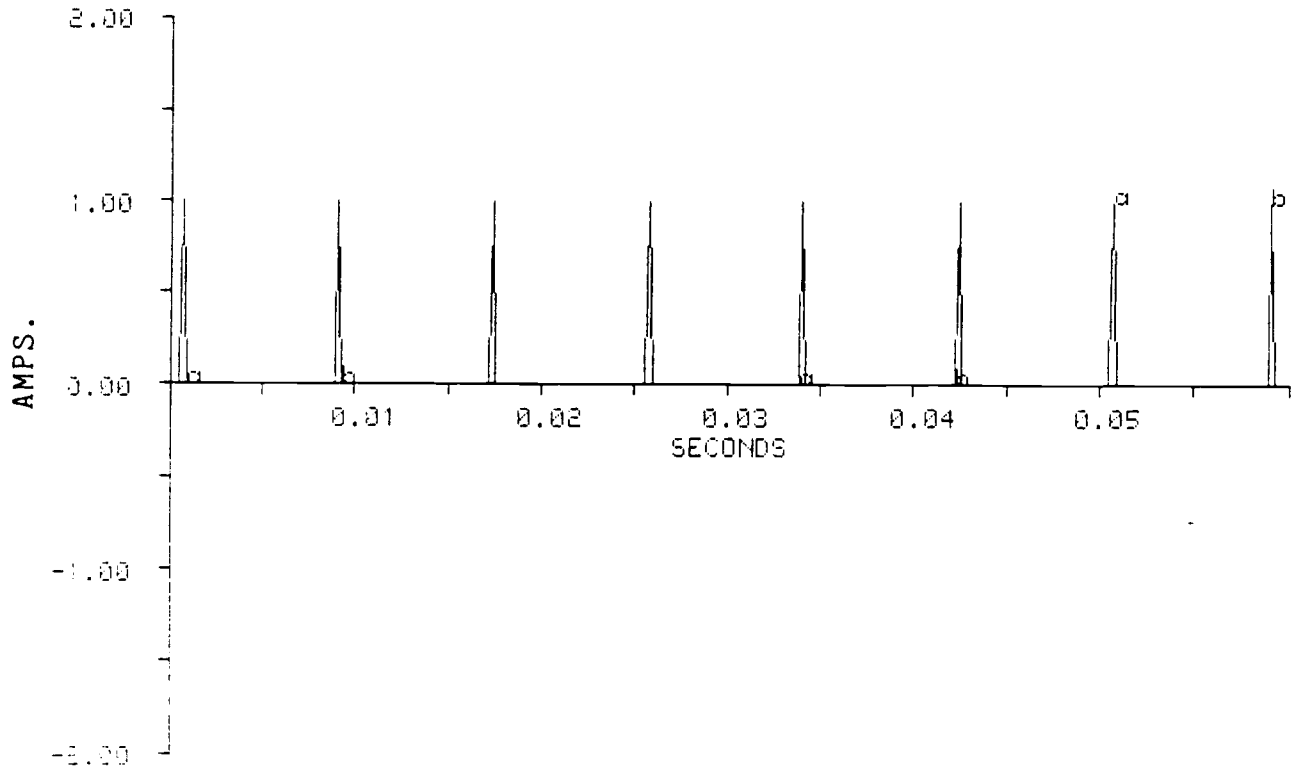

Figure 2.10 Grid Signals of SCR's.
(for every data case)

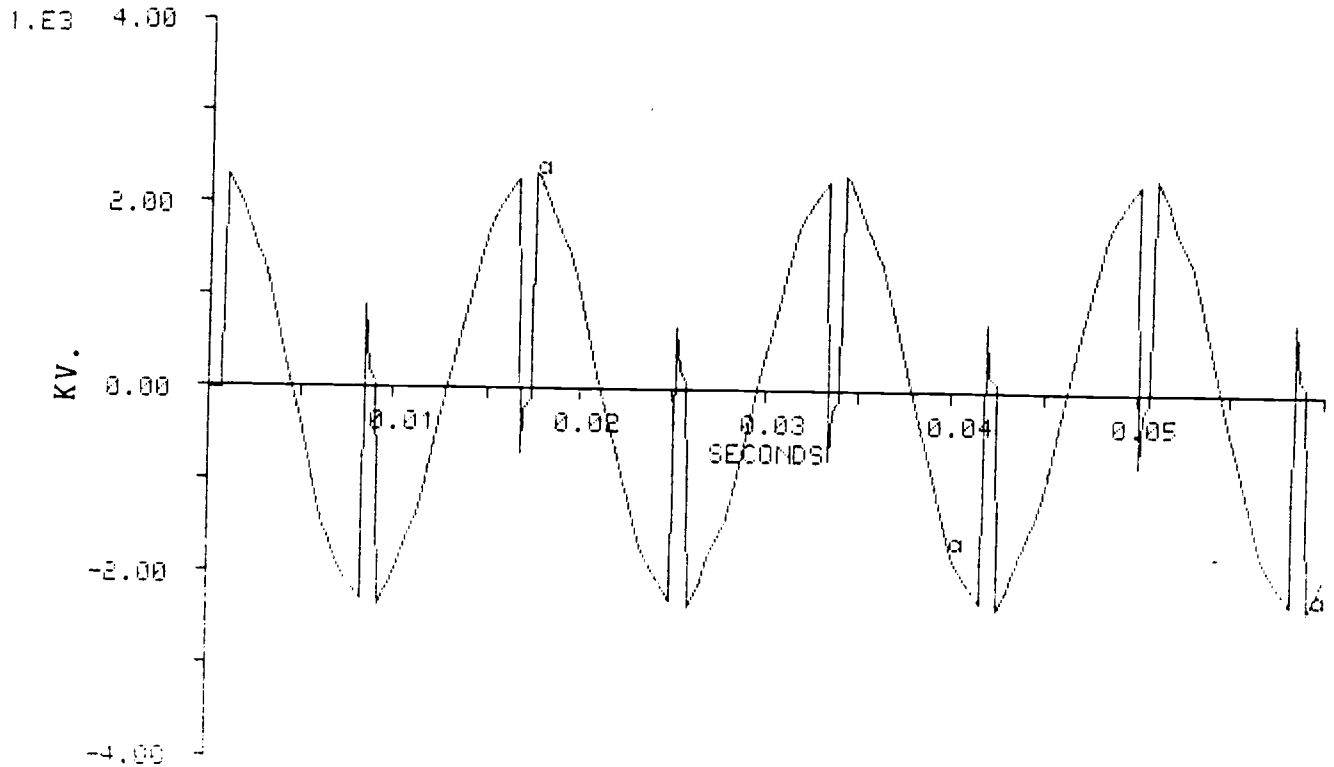

Figure 2.11 Voltage across the inductor of single phase System.
(Phase AB of three phase unbalanced load system)

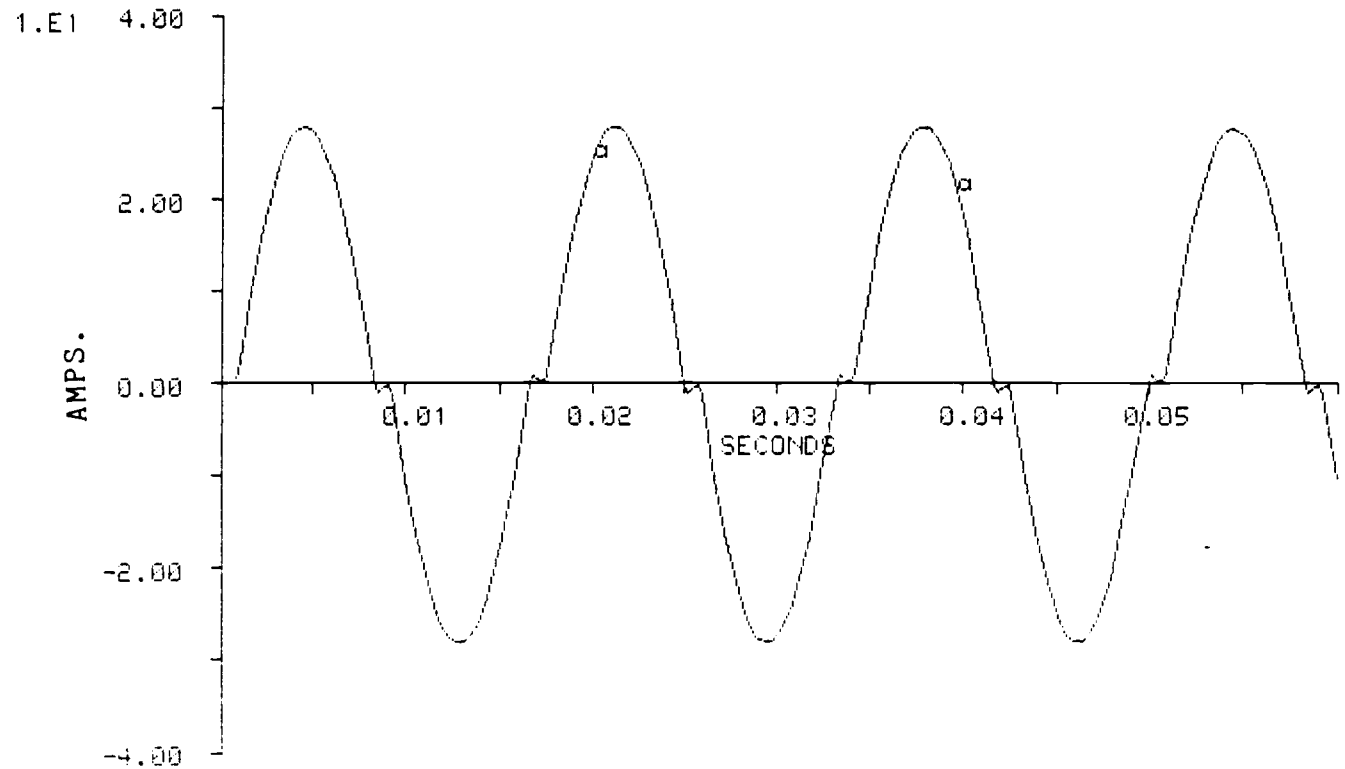

Figure 2.12 Current through the inductor of SVC of the single phase system.

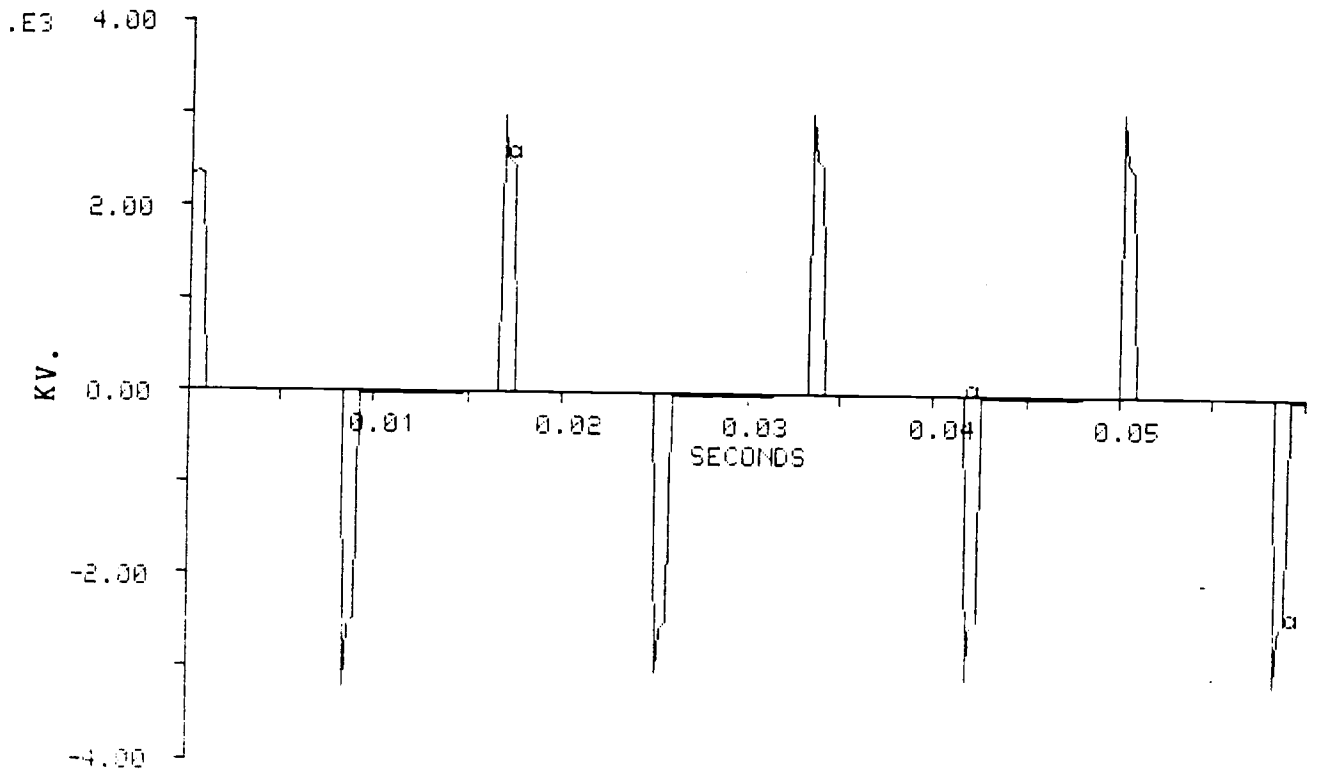

Figure 2.13 Voltage across the SCR's of the single phase system.

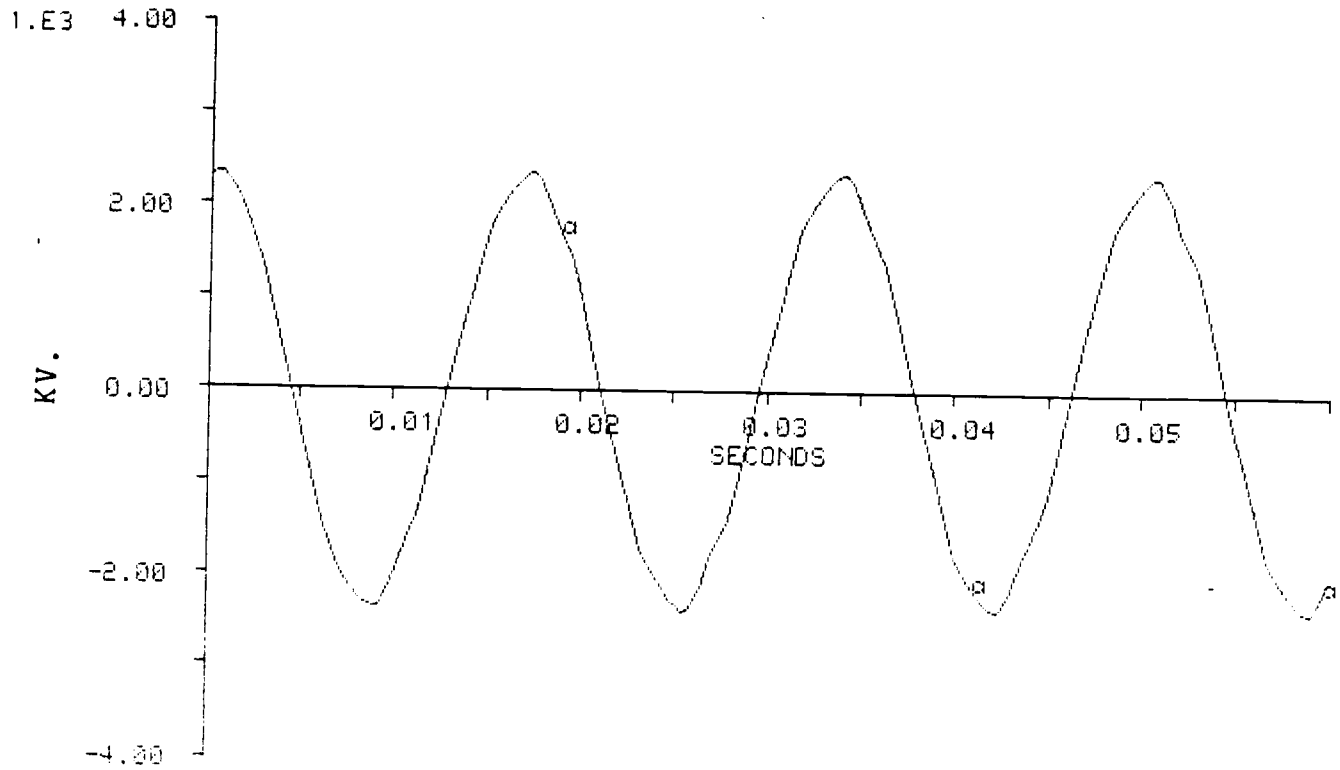

Figure 2.14 Voltage across the Capacitor of the single phase system.

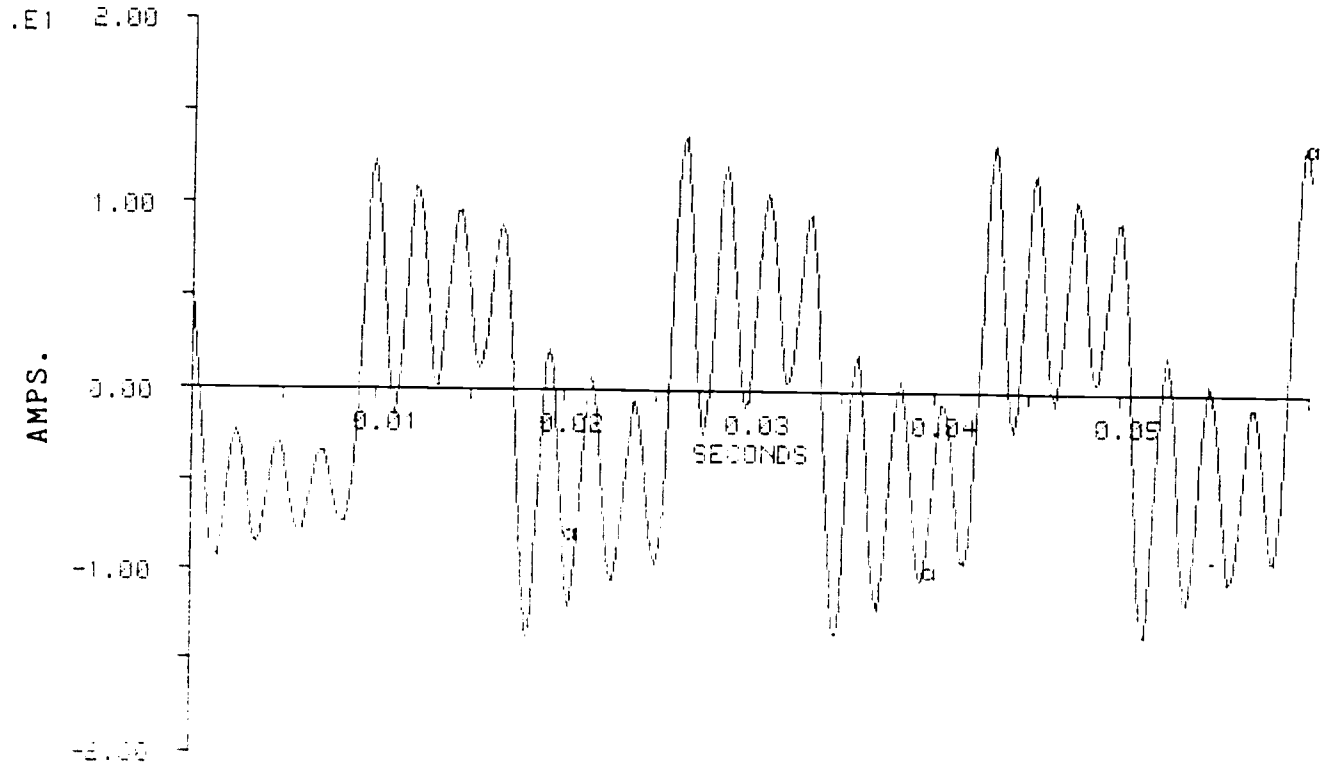

Figure 2.15 The SVC current of single phase system.

the Fourier Coefficients of the voltages and the currents. Following the blank card ending node voltage request card, the Fourier Analysis cards are inserted. The format for using Fourier Analysis is in Appendix G. Examples for using Fourier Analysis are in Data Case D1, D2, and D3.

According to the EMTP rules, calculation of the EMTP is based on phasor solution. When antiparallel thyristors are introduced, the initialization process assumes the antiparallel thyristors are "on" at t=0. The initial conditions of EMTP do not match the initial condition of the system under study (i.e., SCR Q1 is trigged at t<0). Therefore, the transient solution is produced during the integration steps. The transients occur in the first two cycles and the steady state waveforms take place after two cycles (Figure 3.2, 3.3, 3.4). For Fourier Analysis, the waveform has to be in the steady state condition. That is, the first and second cycle of the waveform cannot be used. The third cycle is sampled in order to study the waveform harmonics.

From the results of the Fourier Analysis, in all of the study cases, the SVC currents have both odd and even harmonics. By theory, the SVC currents should only contain the odd harmonics. In all data cases, the time step used is 0.1852 milliseconds which gives 89.9928 (an non-integer) samples per period. This causes the errors by giving the coefficients of even harmonics. Note that the magnitudes of the even harmonics is at least 100 times less than the odd harmonics

(i.e., the magnitude of the second harmonic of the balance three phase load case of the SVC current from bus A-3A to A-4A is in the exponent of "0" but the first harmonic is in the exponent of "2".

The Fourier Coefficients from the EMTP will be used in Chapter III for analyzing the harmonic currents.

III ANALYSIS OF THE HARMONIC CURRENTS

3.1 CHARACTERISTICS OF THE HARMONIC CURRENTS

3.1.1 Relationship between the magnitude of the harmonic currents and the firing angle

From ref.[7], the harmonic currents can be analyzed by using the equivalent circuit.

Figure 3.1 shows the equivalent circuit of a TCR (Thyristor-Controlled-Reactor).

Assume :

$$v(t) = 2V_1 \mathrm{Sin}\,\omega_1 t \qquad (3.1)$$

Thyristors Q1 and Q2 are trigged at and + respectively. The corresponded phasor of the fundamental current is obtained by Fourier Analysis.

$$\underline{I}_1/I_{ref} = (2(1-\alpha/\pi)+1/\pi\,\mathrm{Sin}2\alpha)e^{j\pi/2} \qquad (3.2)$$

$\underline{I}_1$ is the phasor form of the fundamental current

The harmonic current phasor:

$$\underline{I}_n/I_{ref} = (2/n\pi)[\mathrm{Sin}(n-1)\alpha/(n-1) - \mathrm{Sin}(n+1)\alpha/(n+1)]e^{j\pi/2} \qquad (3.3)$$

$\underline{I}_n$ is the phasor form of the nth harmonic.

For n = 3,5 7,...

where I_{ref} denotes the rms current for the minimum firing angle.

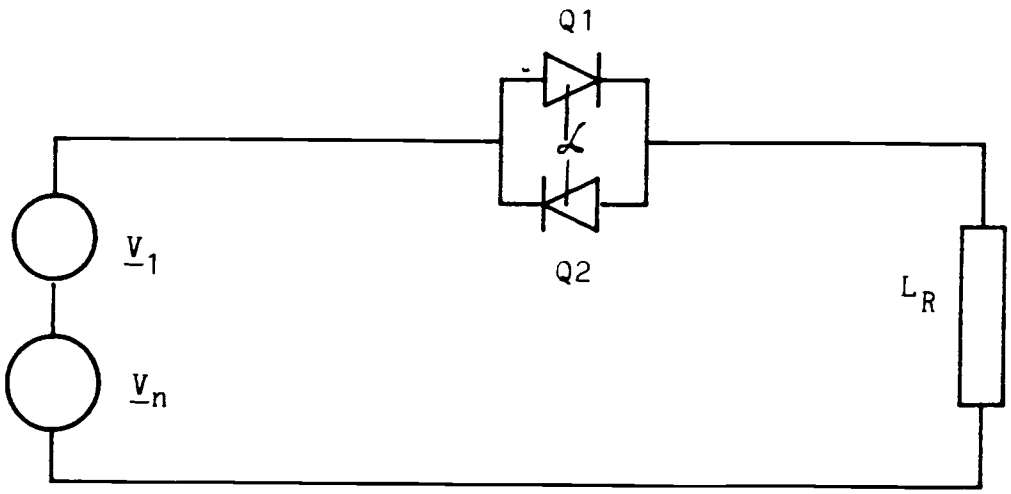

Figure 3.1 The equivalent circuit for analyzing the single phase TCR. T

$$I_{ref} = V_1/\omega_1 L_R \tag{3.4}$$

V_1 denotes the rms value of equivalent voltage source. L_R is the inductance of the TCR.

The harmonic number n is defined as the ratio of the harmonic frequency f_n to the fundamental frequency f_1 [7].

$$n = f_n/f_1 \tag{3.5}$$

Equations (3.2) and (3.3) are based on the assumption of eq.(3.1). If phase shift occurs in eq.(3.1), eq.(3.2) and (3.3) will not be valid. Therefore, modification of eq.(3.2) and (3.3) is required.

From Chapter II, the coefficients of the Fourier Series of the line voltages and currents are determined using the EMTP. The coefficients will be used for finding the function of the currents in terms of the firing angle. Phase A-B of the three phase balanced load system will be analyzed as an example. From the Fourier Analysis of the EMTP, $V_{A-9A-A-9B}$ is a nonsinusoidal waveform. The Fourier Series of V_{A-9A} to A-9B is

$$V_{A-9A \text{ to } A-9B} = a_0/2 + \sum_{n=1}^{\infty}[a_n \mathrm{Cos}(n\ _1 t) + b_n \mathrm{Sin}(n\ _1 t)] \tag{3.6}$$

Assume $V_{A-9A \text{ to } A-9B}$ is a sinusoidal waveform at the

fundamental frequency 60 Hz. (neglect all the harmonics), and that all resistances in SVC are small compared with the inductive and capacitive reactances of SVC. Therefore, all resistances can be neglected in order to make the uncomplicated calculation.

Consider the equation

$$i_L(t) = 1/L \int V_{A-9A \text{ to } A-9B} dt \qquad (3.7)$$

From Appendix E Data Case E3, the Fourier Coefficients of line voltages is determined, the cosine and sine coefficients of the fundamental of line voltage phase AB are 6.451E+03 and 2.812E+03 Volts.

Therefore,

$$V_{A-9A \text{ to } A-9B} = 6.451\text{Cos}\omega_1 t + 2.812\text{Sin}\omega_1 t \quad \text{KV.}$$
$$= 7.037\text{Cos}(\omega_1 t + 0.411) \quad \text{KV.} \qquad (3.8)$$

The thyristors are trigged at α_c and $\pi + \alpha_c$

where the triggering angle, α_c, of the thyristor Q1 = -0.59 radians. The triggering angle, $\pi + \alpha_c$, of the thyristor Q2 = 2.548 radians.

When $\omega_1 t$ is between zero and α_c radians.

where t is an instantaneous time.

$i_L(t) = 0$ (no thyristors are trigged.)

When $\omega_1 t$ is more than α_c

but less than $\pi - (\alpha_c + 0.822)$

$$i_L(t) = 7.037/\omega_1 L[\mathrm{Sin}(\omega_1 t+0.411)-\mathrm{Sin}(\alpha_c+0.411)]$$

This current waveform will go down to zero value at $\omega_1 t = \pi - (\alpha_c+0.822)$.

When $\omega_1 t$ is between $\pi - (\alpha_c+0.822)$ and $\pi + \alpha_c$

$i_L(t) = 0$ (thyristor Q1 is reversed bias
Q2 is not trigged.)

When $\omega_1 t$ is more than $\pi + \alpha_c$ but less than $2\pi - (\alpha_c+0.822)$

$$i_L(t) = 7.037/\omega_1 L[\mathrm{Sin}(\omega_1 t+0.411)+\mathrm{Sin}(\alpha_c+0.411)]$$

The current waveform will go down to zero value at $\omega_1 t = 2\pi - (\alpha_c+0.822)$

When $\omega_1 t$ is between $2\pi - (\alpha_c+0.822)$ and $2\pi + \alpha_c$

$i_L(t) = 0$ (Q1 is not trigged,
Q2 is reversed bias)

Therefore,

$$\begin{aligned} i_L(t) = {} & (7.037/\omega_1 L)[\mathrm{Sin}(\omega_1 t+0.411)-\mathrm{Sin}(\alpha_c+0.411)]\times \\ & [U(\omega_1 t-\alpha_c)-U(\omega_1 t-\pi+\alpha_c+0.822)] \\ & + (7.037/\omega_1 L)[\mathrm{Sin}(\omega_1 t+0.411)+\mathrm{Sin}(\alpha_c+0.411)]\times \\ & [U(\omega_1 t-\pi-\alpha_c)-U(\omega_1 t-2\pi+\alpha_c+0.811)] \end{aligned} \tag{3.9}$$

where U(.) defines the Unit Step function

x means multiplication

From eq.(3.9), $i_L(t)$ is an odd function [$i_L(t) = -i_L(-t)$]; and, from the properties of Fourier Series, $a_0 = 0$ and $a_n = 0$ for the odd function.

Therefore,

$$i_L(t) = \sum_{n=1}^{\infty} b_n \mathrm{Sin}(n\omega_1)t \qquad (3.10)$$

$$b_n = 2/T_1 \int i_L(t)\mathrm{Sin}(n\omega_1)t\,dt \qquad (3.11)$$

In order to find the fundamental component of the Fourier Series, the value n = 1 must be substituted into eq.(3.6) before processing the integration.

Therefore,

$$b_1 = 2/T_1 \int i_L(t)\mathrm{Sin}(1\omega_1)t\,dt$$

After the integration process:

$$b_1 = 0.6366I_{ref}(0.0017953 - 0.001548\alpha_c + 0.00165622\mathrm{Sin}2\alpha_c + 0.00178286\mathrm{Cos}2\alpha_c) \qquad (3.12)$$

and

$$\begin{aligned} b_n = 2I_{ref}/\pi\, [&(0.5/(1-n)\omega_1)\mathrm{xSin}\{(1-n)(\pi-\alpha_c-0.822)\} \\ &- (0.5/(1-n)\omega_1)\mathrm{xSin}\{(1-n)(\alpha_c+0.411)\} \\ &- (0.5/(n+1)\omega_1)\mathrm{xSin}\{(n+1)(\pi-\alpha_c-0.822)\} \\ &+ (0.5/(n+1)\omega_1)\mathrm{xSin}\{(n+1)\alpha_c+0.411\} \\ &+ (\mathrm{Sin}(\alpha_c+0.411)/n\omega_1)\{\mathrm{Cos}n(\pi-\alpha_c-0.822) \\ &- \mathrm{Cos}n\alpha_c\}] \end{aligned} \qquad (3.13)$$

Simplifying equation (3.13), yields

$$b_n = 2I_{ref}/\pi[\{(-1)^n/2(n-1)\omega_1\}x\mathrm{Sin}\{(n-1)\alpha_c+(2n-1)0.411\}$$
$$+\{1/2(n-1)\omega_1\}x\mathrm{Sin}\{-(n-1)\alpha_c+0.411\}$$
$$+\{(-1)^{n+1}/2(n+1)\omega_1\}x\mathrm{Sin}\{(n+1)\alpha_c+(2n+1)0.411\}$$
$$+\{1/2(n+1)\omega_1\}x\mathrm{Sin}\{(n+1)\alpha_c+0.411\}$$
$$+\{1/n\omega_1\}x\mathrm{Sin}(\alpha_c+0.411)\{(-1)^n\mathrm{Cos}(n\alpha_c+0.822n)$$
$$-\mathrm{Cos}n\alpha_c\}] \quad (3.14)$$

where $n = 2,3,4,...$

$$I_{ref} = 7.037/\omega_1 L$$

$$i_L(t) = b_1\mathrm{Sin}\omega_1 t + \sum_{n=1}^{\infty} b_n\mathrm{Sin}(n\omega_1)t \quad (3.15)$$

Transform to the phasor expression at the fundamental frequency:

$$\underline{I}_L(t) = b_1 e^{(-j\pi/2)} \quad (3.16)$$

where b_1 and b_n are defined by equations (3.12) and (3.14) respectively.

Equation (3.15) can be separated into two equations.

$$\underline{I}_{L,1}(t) = b_1 e^{(-j\pi/2)} \quad (3.17)$$

$$\underline{I}_{L,n}(t) = b_n e^{(-j\pi/2)} \quad (3.18)$$

However, the above equations are based on the assumption that $V_{A-9A \text{ to } A-9B}$ is a sinusoid (neglect all harmonics). Consider the Fourier Analysis of $V_{A-9A-A-9B}$ of the three phase balanced load system (Appendix E Data Case E3), the complex magnitude of the 5th harmonic is 5.68 % of the fundamental which dominates from another harmonics. Hence the effect of 5th harmonic component has to be included.

Cosine coefficient of the 5th harmonic component is -0.3879E+03 Volts and sine coefficient of the 5th harmonic component is -0.0989675E+03 Volts.

Yield,

$$V_5 = -0.3879\text{Cos}5\omega_1 t - 0.0989675\text{Sin}5\omega_1 t \text{ KV.}$$
$$= 0.4003\text{Cos}(5\omega_1 t - 2.8918) \text{ KV.}$$

where V_5 is the 5th harmonic of line voltage phase AB.

The current through the inductor

$$i_{L,5}(t) = 1/_L \int V_5 dt$$

where $i_{L,5}$ is the current through the inductor of SVC due to the 5th harmonic of line voltage phase AB

When $\omega_1 t$ is between zero and α_c radians

t is an instantaneous time.

$i_{L,5}(t) = 0$ (no thyristors are trigged.)

When $\omega_1 t$ is between α_c and $\pi/5 - \alpha_c + 1.15624$

$$i_{L,5}(t) = 0.2I_5[\mathrm{Sin}(5\omega_1 t-2.8918) - \mathrm{Sin}(5\alpha_c-2.8918)] \quad \text{Amps.}$$

The current will go to zero at $\pi/5 - \alpha_c + 1.15624$ radians.

When $\omega_1 t$ is between $\pi/5 - \alpha_c + 1.15624$ and $\pi + \alpha_c$

$i_{L,5}(t) = 0$ (Q1 is reversed bias, Q2 is not trigged.)

When $\omega_1 t$ is between $\pi + \alpha_c$ and $2\pi/5 - \alpha_c + 1.15624$

$$i_{L,5}(t) = 0.2I_5[\mathrm{Sin}(5\omega_1 t-2.8918) + \mathrm{Sin}(5\alpha_c-2.8918)] \quad \text{Amps.}$$

The current will go to zero at $2\pi/5 - \alpha_c + 1.15624$ radians.

Therefore,

$$i_{L,5}(t) = 0.2I_5[\mathrm{Sin}(5\omega_1 t-2.8918)+\mathrm{Sin}(5\alpha_c-2.8918)]$$

where $\omega_1 t$ is between α_c and $\pi/5 - \alpha_c + 1.15624$

$$= 0.2I_5[\mathrm{Sin}(5\omega_1 t-2.8918)+\mathrm{Sin}(5\alpha_c-2.8918)]$$

where $\omega_1 t$ is between $\pi + \alpha_c$ and $2\pi/5 + \alpha_c - 1.15624$

$$= 0 \quad ; \quad \text{elsewhere}$$

where $I_5 = 0.4003/5\omega_1 L$

Apply the Fourier Series to $i_{L,5}(t)$; we can see that

$i_{L,5}(t)$ is an odd function. Therefore,

$$a_{0,5} = 0 \text{ and } a_{n,5} = 0$$

$$i_{L,5}(t) = \sum_{n=1}^{\infty} b_{n,5}\mathrm{Sin}5n\omega_1 t \tag{3.19}$$

$$b_{n,5} = 2/\pi\int i_{L,5}(t)\mathrm{Sin}(5n\omega_1 t)dt \tag{3.20}$$

After the integration

$$\begin{aligned} b_{n,5} = {} & 2I_5/\pi[(0.5/(5-n)\omega_1)x\{\mathrm{Sin}((5-n)\pi/5-(5-n)\alpha_c \\ & -1.15624n+2.8918) \\ & - \mathrm{Sin}((5-n)\alpha_c-2.8918)\} \\ & -(0.5/(5+n)\omega_1)x\{\mathrm{Sin}((5+n)\pi/5-(5+n)\alpha_c \\ & +1.15624n+2.8918) \\ & - \mathrm{Sin}((5+n)\alpha_c-2.8918)\} \\ & +\{\mathrm{Sin}(5\alpha_c-2.8918)/n\omega_1\}x\{\mathrm{Cos}n\alpha_c \\ & - \mathrm{Cos}(n\pi/5-n\alpha_c \\ & +1.15624n)\}] \end{aligned} \tag{3.21}$$

where $n \neq 5$

Substitute n = 5 to eq.(3.20). After the integration.

For n = 5

$$\begin{aligned} b_{5,5} = {} & 0.6366I_5[0.0009251 + 0.00257\alpha_c + 0.00022529\mathrm{Sin}10\alpha_c \\ & + 0.00012348\mathrm{Cos}10\alpha_c + 0.00049779\mathrm{Sin}(10\alpha_c-2.8918) \\ & + 0.00012763\mathrm{Cos}(10\alpha_c-2.8918)] \end{aligned} \tag{3.22}$$

Therefore,

$$i_{L,5}(t) = \sum_{n=1}^{4} b_{n,5}\mathrm{Sin}5\omega_1 t + b_{5,5}\mathrm{Sin}25\omega_1 t + \sum_{n=6}^{\infty} b_{n,5}\mathrm{Sin}n\omega_1 t \qquad (3.23)$$

The 6th and higher harmonics of $i_{L,5}(t)$ can be neglected because of the small magnitudes.

Superimpose $i_{L,5}(t)$ with $i_L(t)$, yield

$$\begin{aligned} i_{L,T}(t) &= b_1\mathrm{Sin}\omega_1 t + b_2\mathrm{Sin}2\omega_1 t + b_3\mathrm{Sin}3\omega_1 t \\ &\quad + b_4\mathrm{Sin}4\omega_1 t + b_5\mathrm{Sin}5\omega_1 t + \ldots \\ &\quad + b_{1,5}\mathrm{Sin}5\omega_1 t + b_{2,5}\mathrm{Sin}10\omega_1 t \\ &\quad + b_{3,5}\mathrm{Sin}15\omega_1 t + \ldots \\ &= b_1\mathrm{Sin}\omega_1 t + b_2\mathrm{Sin}2\omega_1 t + b_3\mathrm{Sin}3\omega_1 t \\ &\quad + b_4\mathrm{Sin}4\omega_1 t + (b_5+b_{1,5})\mathrm{Sin}5\omega_1 t \end{aligned} \qquad (3.24)$$

The phasor form of the fundamental component is

$$\underline{I}_{1L,T} = b_1 e^{(-j\pi/2)} \qquad (3.25)$$

Therefore, the inductive impedance of the inductor of SVC in term of the firing angle at the fundamental frequency is

$$Z(\alpha_c) = \underline{V}_{A-9A \text{ to } A-9B} / \underline{I}_{1L,T} \qquad (3.26)$$

where $\underline{V}_{A-9A \text{ to } A-9B} = 7.037 \angle 0^\circ$ KV.

$$Z(\alpha_c) = 7.037 \angle 0^\circ / b_1 e^{(-j\pi/2)} \text{ Kiloohms.} \qquad (3.27)$$

where $b_1 = 0.6366 I_{ref}(0.0017953 - 0.001548\alpha_c$
$0.00165622 \text{Sin}2\alpha_c + 0.00178286 \text{Cos}2\alpha_c)$

For three phase balance load case,

$$I_{ref} = 7.037 / \omega_1 L$$

where $\omega_1 L = 70.000$ Ohms.

$I_{ref} = 100.528$ Amps.

$\alpha_c = -0.5934$ Radians

From eq.(3.26), the inductive impedance of the SVC phase A-B is

$$Z(-0.5934) = j7.037 / 0.11814814 \text{ Kiloohms.}$$
$$= j59.561 \text{ Kiloohms.}$$

Equation (3.27) implies that the effective inductive impedance of the thyristor-controlled-reactor (TCR) is the function of the firing angle at the fundamental frequency.

Equations (3.21) to (3.25) show that the 5th harmonic of the current through the inductor does not have any effect on the total harmonic current ($i_{L,T}(t)$) through the inductor,

in other words, the phasor forms of the equations (3.16) and (3.25) are identical. However, the harmonic contents of the line voltage phase AB are also generated (results of Fourier Analysis in Data Case E3 before filtering) which mean the power still generates from the harmonic contents of the currents through the inductor and the harmonic contents of the line voltage (line voltage phase AB is nonsinusoidal. Therefore, the Fourier Analysis of the line voltage can always be obtained.)

The harmonic currents generated by SVC can flow around the systems by ground loops. Because of the resistance of the windings in each component, the harmonic currents can produce overheating in the windings.

The power generated from the harmonic contents and the resistance of the winding is

$$P = |\underline{I}_n|^2 R_w \tag{3.28}$$

where subscript n define the nth harmonic.

$|\underline{I}_n|$ is the magnitude of nth harmonic

R_w is the winding resistance.

The overheating can exceed limited short-circuit power of system and damage the components in system.

3.2 REDUCE THE HARMONIC CURRENTS BY FILTERING

3.2.1 Filter Design

In order to reduce the effect of the harmonic current, the series resonance filter(R-L-C series circuit) is used

by paralleling to the SVC.

Consider the fourier coefficients of SVC currents of the three phase balanced load system (Data Case E3), the 5th harmonic of each phase dominates from another harmonics.

Given the R-L-C circuit resonates at the frequency 300 Hz. (the 5th harmonic).

The bandwidth of the R-L-C circuit = 120 Hz.

This means the 3rd to 7th harmonic current components will be reduced.

At the frequency 300 Hz

$$LC = 1/(2\pi f)^2 = 2.8 \times 10\text{-}7 \qquad (3.34)$$

Let the resistance in the filter R = 0.1 ohm

Therefore, at the frequency 180 Hz

$$|V|/|R+j(\omega_1 L-1/\omega_1 C)| = 0.707 I_{max} = 0.707|V|/R = 7.07 \qquad (3.35)$$

From the equations (3.34) and (3.35)

L = 0.34887 millihenries

the inductive reactance = 0.13152 ohms at 60 Hz.

C = 802.59 microfarads

Connect the resonance circuits between

bus A-4A to ground

bus A-4B to ground

bus A-4C to ground

Simulate the circuits by the EMTP. The result after filtering is shown in Appendix F.

3.3 RESULT AFTER FILTERING

Table 3.1 shows the results of harmonic currents before and after filtering of the three phase balanced load sytem (Data Case D2).

Table 3.1: The results of harmonic currents before and after filtering.

Phase	No of harmonic	Net current before filtering		Net current after filtering	
		Amps.	% fund.	Amps.	% fund.
A	3rd	10.225	23.48	38.642	2.28
	5th	31.774	72.96	19.194	1.13
	7th	3.37	9.04	13.200	0.78
B	3rd	11.904	26.93	28.346	1.70
	5th	32.083	72.57	12.306	0.74
	7th	2.357	5.33	8.933	0.53
C	3rd	10.057	22.68	11.179	0.66
	5th	31.901	71.94	4.451	0.26
	7th	3.283	7.40	2.801	0.16

From the result, the fundamental component of the net currents (the combined currents of SVC and the filters) after filtering are higher than the fundamental component of the SVC currents before filtering. The reason is at the

fundamental frequency, the impedance of R-L-C series circuit of each phase equals

$$0.1 + j(\omega_1 L - 1/\omega_1 C) = 0.1 - j3.1735 \qquad \text{ohms.}$$

The resistance component of the impedance is small (approximately 3 % of the reactance component). The net reactance component is the capacitive reactance; which means the net reactive power (Q) (sum of the reactive power from the capacitor and the reactive power from the inductor) is injected to the bus causing the magnitude of the voltage across the SVC at that bus increases. Because of the constant impedance of SVC, the magnitude of SVC current at that bus also increases.

Compare between the percentage of the harmonic currents (base of their own fundamental components) before and after filtering; the percentage of the harmonic currents after filtering are much lower than the percentage of the harmonic currents before filtering. The SVC currents and the voltage across the SVC waveforms after filtering are approximately sinusoidal; which mean the effect of the harmonic currents are eliminated. Figure 3.2, 3.3, and 3.4 show the SVC currents of phase AB, BC, and CA before filtering. Figure 3.4 shows the SVC currents of phase AB, BC, CA in the same figure after filtering. Figure 3.5 shows that the currents are approximately sinusoidal. Figure 3.6 and 3.7 show the line voltages before and after filtering which both figures are affected by the

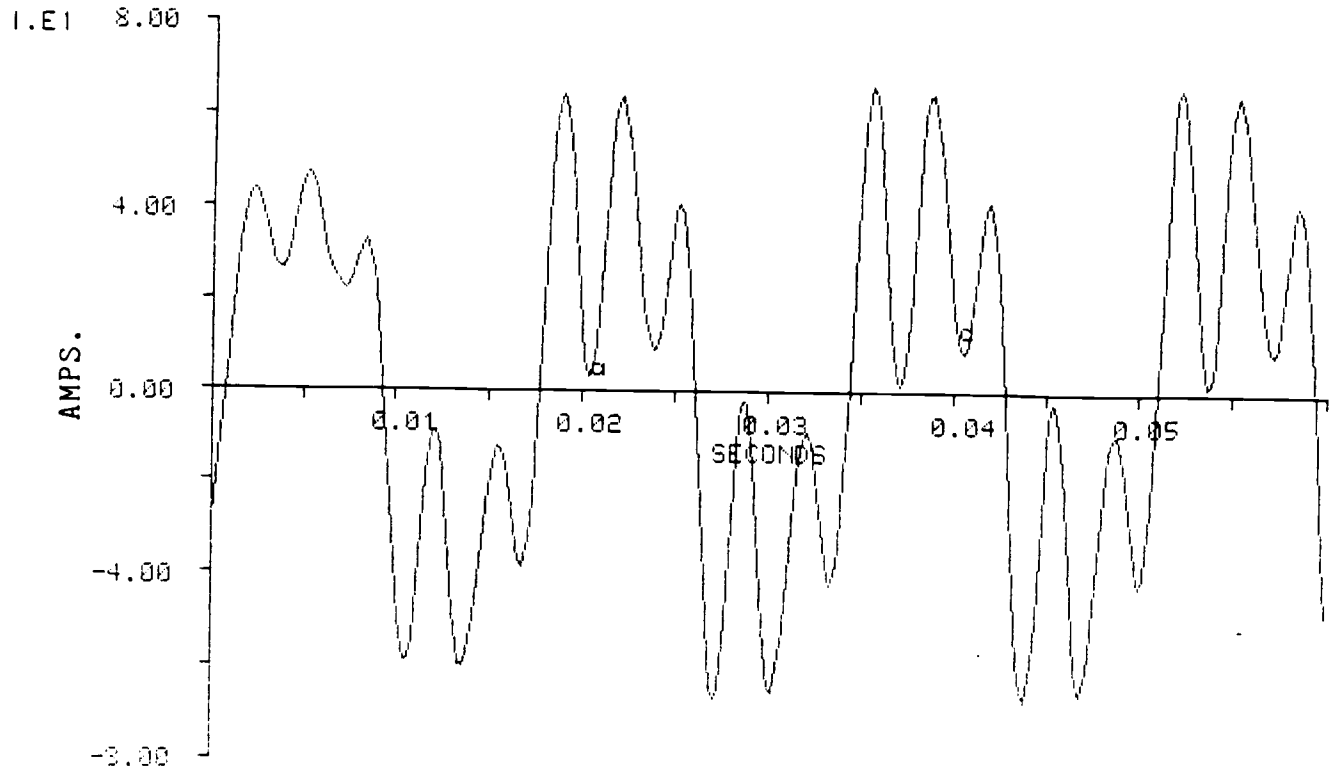

Figure 3.2 The SVC current of phase AB of three phase balanced load system.

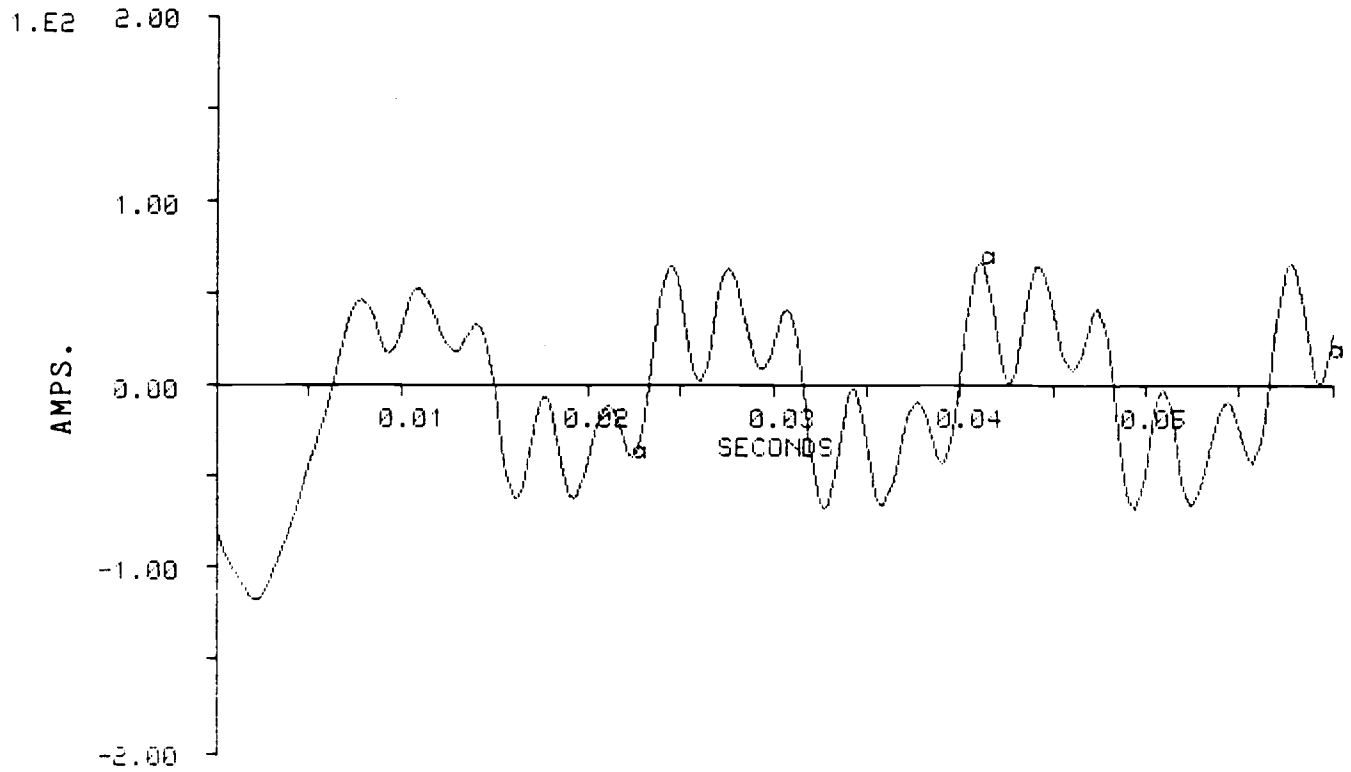

Figure 3.3 The SVC current of phase BC of three phase balanced load system.

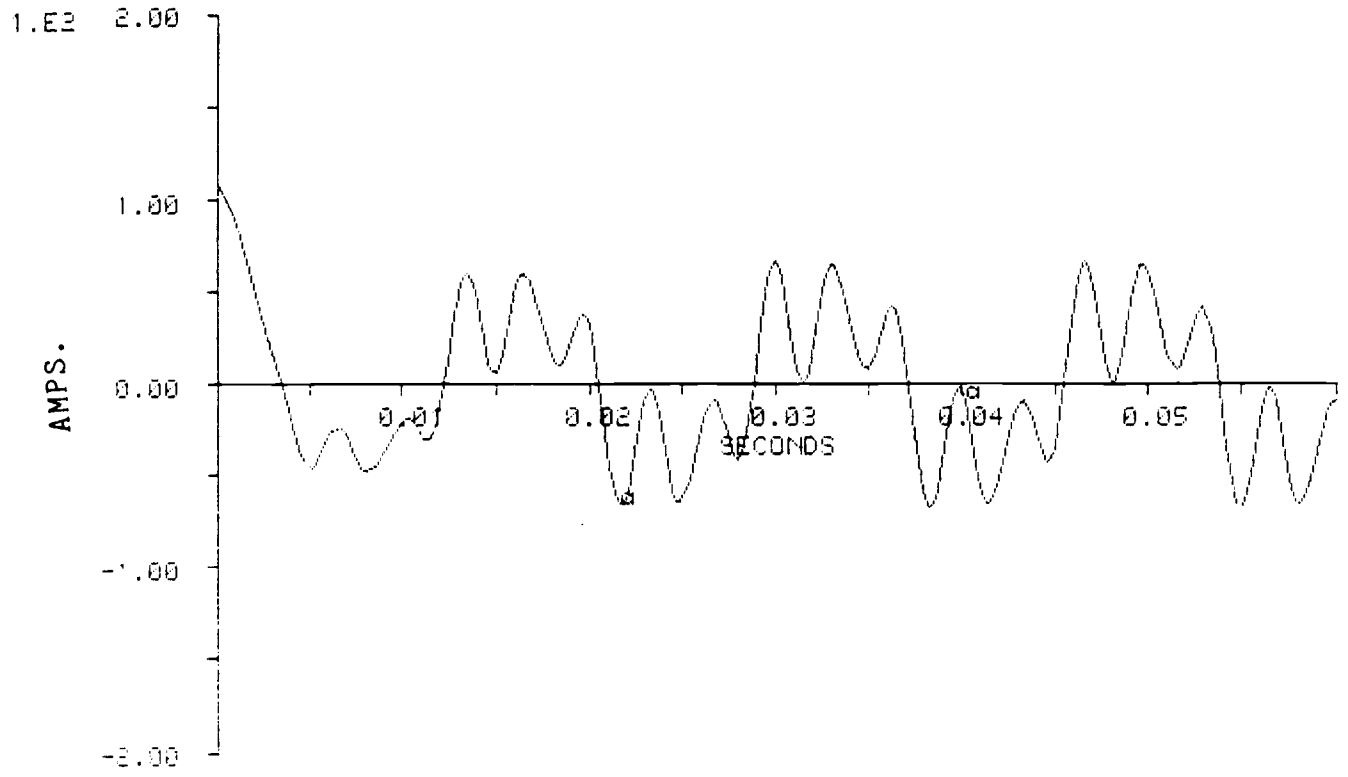

Figure 3.4 The SVC current of phase CA
of three phase balanced load system.

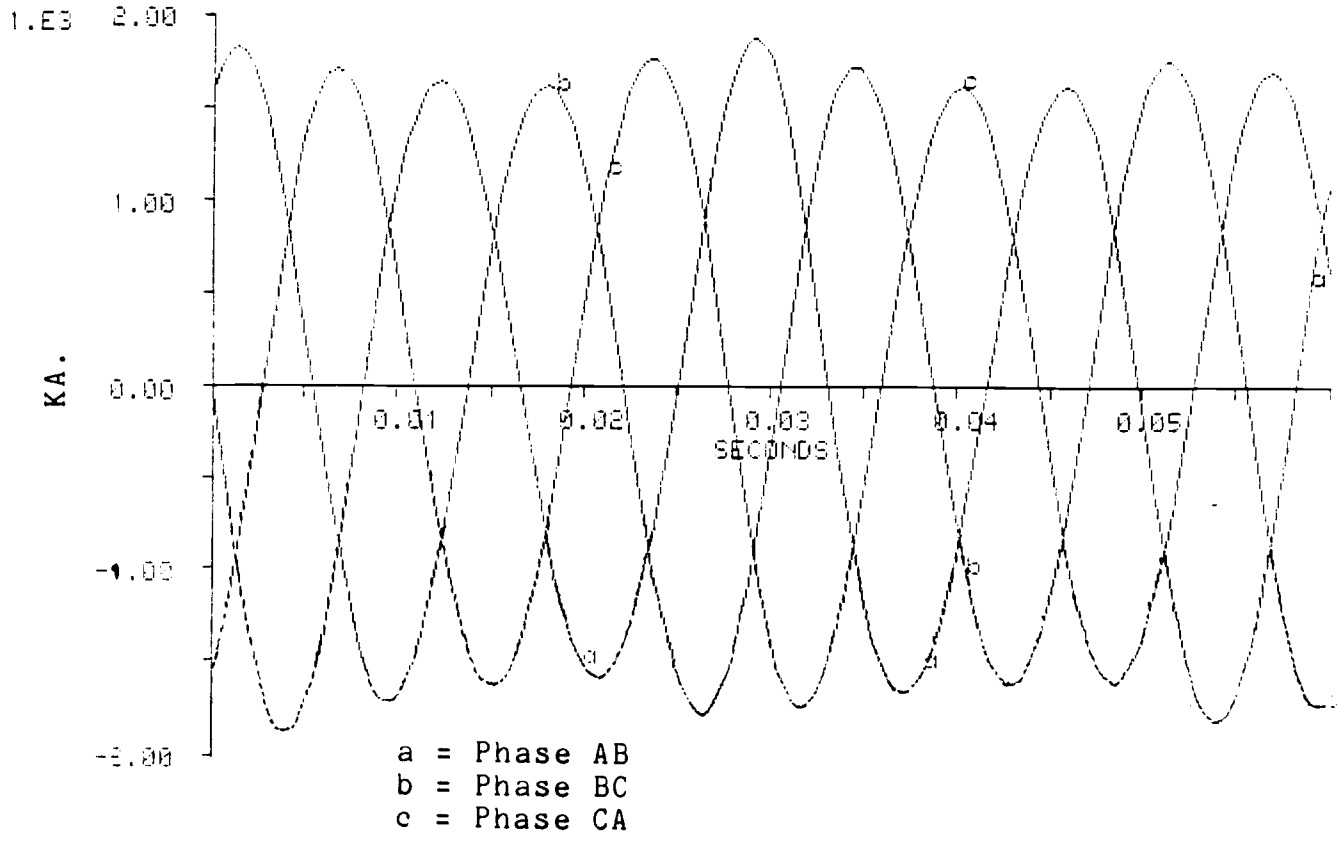

Figure 3.5 The SVC currents of three phase balanced load system after filtering.

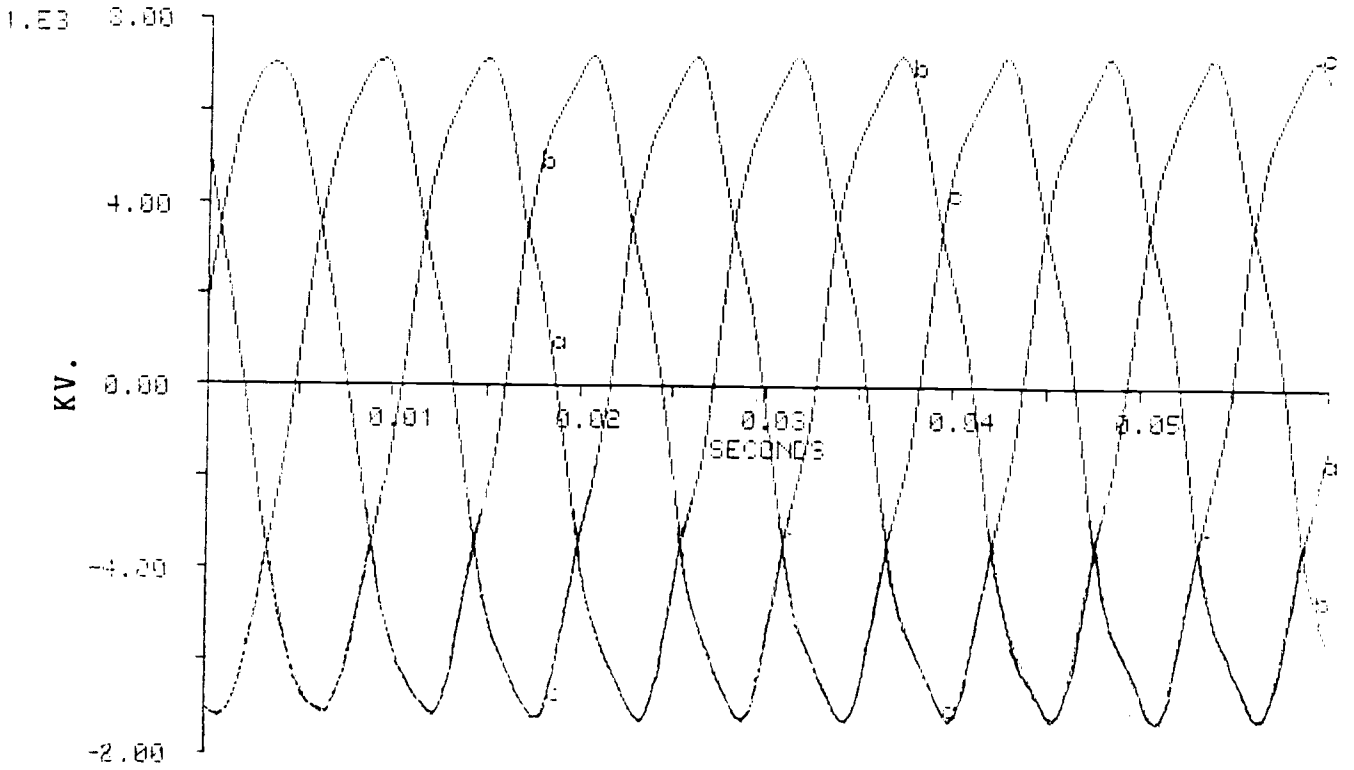

a = Phase AB
b = Phase BC
c = Phase CA

Figure 3.6 Three phase line voltages before filtering.

(three phase balanced load system)

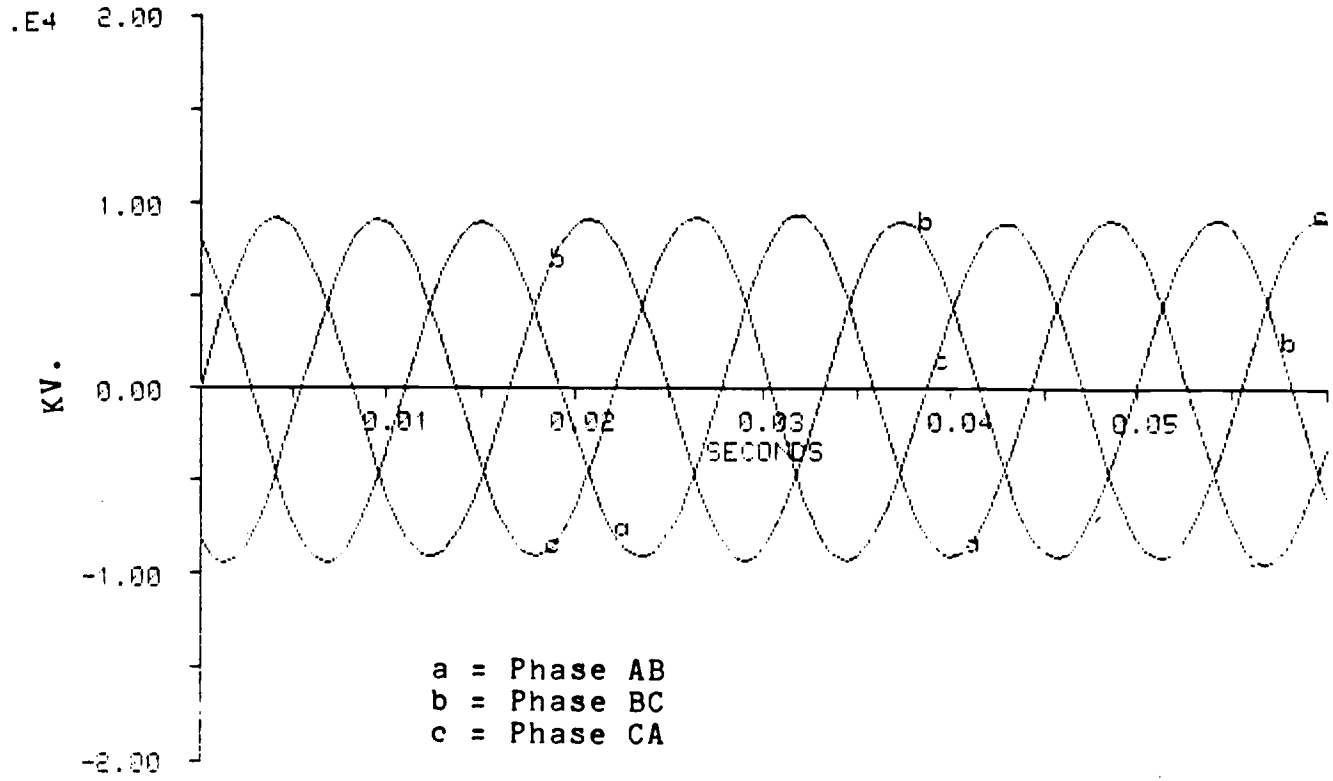

Figure 3.7 Three phase line voltages after filtering.
(three phase balanced load system)

SVC currents.

3.4 EFFECT TO THE SYSTEM

From the result we can see that the harmonic currents in SVC produces the harmonic components in the line voltages causing high magnitudes of the line voltages, exceeded short-circuit power, low voltage regulation and producing nonsinusoidal waveforms in the lines which are highly undesirable. Therefore, the harmonic currents should be kept as low as possible. By using the R-L-C resonance circuits, the reduction or elimination of the effect of the harmonic currents can be obtanined. However, not only the TCR can generate the harmonic current but also the nonlinear elements in the system, for instant the transformer model with the saturated magnetizing branch. By the delta connection of SVC, the triplet harmonics will flow around the SVC loop and will not come out to the system line.

Filtering is one of several methods to eliminate the harmonic currents. However, it does not guarantee that the magnitude of the terminal voltage of SVC will be reduced because the filter might act like a capacitive reactance at the power frequency. So the capacitive reactance will inject the reactive power to the system causing the terminal voltage increases (as same as the studied system). Therefore, the optimal values of the elements in the filter are important. The R-L-C series circuit might not be the appropriate filter for haromonic current elimination because it changes the

characteristics of the system (line voltage and line current increase, load currents also increase.). Nonlinear filter or adaptive filter may be more appropriate. Three phase filter design might be interesting in order to eliminate the harmonic current not only in the TCR but also in general case.

IV CONCLUSION

From the first three chapters, digital simulation is introduced. A large number of assumptions have been made in this thesis. Furthermore, the system which is studied is an ideal case (for instance, linear model of transformer, three phase balance load case, etc.). Some hints of the Static Vars Compensators are introduced in this thesis. Advantages and disadvantages, problems from harmonic currents due to limited short-circuited power of system, how harmonic current affects to system, magnitude of TCR current in function of firing angle, TCR impedance in function of firing angle at power frequency are also explained.

Errors from digital simulation have to be concerned for the more accurated results (error during integration steps, overflows and underflows condition, errors from Fourier Analysis with the EMTP; which are not included in this thesis). According to SVC theory for a balanced system only odd harmonics will be generated. But Fourier Analysis with the EMTP shows non-zero coefficients of even harmonics which means the errors from the numerical integrations had occured in Fourier Analysis (the magnitudes of even harmonics are aproximately zeros compared to the magnitudes of odd harmonics). From the SVC current and voltage waveforms of the three phase balanced load system (Figure. 3.2 to 3.7), the triplet harmonics circulate around the SVC loop and do not affect the system lines which means the delta connection of SVC keep

the triplet harmonics in the loop.

The system studied in this thesis an is uncomplicated one which only contains one three phase voltage source, one set of the three phase equidistance spaced transmission line with no ground effect, one three phase Wye-Wye connected transformer, and one three phase load (every element in the system is assumed to be linear.).

The main point of this thesis is chapter III; Fourier Analysis of the Harmonic Currents. This chapter shows how the harmonic current generated, and elimination of the harmonic currents by R-L-C series circuit which is one of several methods to eliminate the undesired harmonic current. The topic might be extended further in the way of Static Vars Compensators or elimination of harmonic currents by another methods.

The harmonic effects are also important. Even though the harmonic current has no effect on the magnitude of the fundamental component of SVC current (eq.(3.16) and eq.(3.25) are identical.), peaks of current and voltage may exceed the ratings of components in a power system. Due to limited short circuit power of system, power generated from harmonic contents of current and voltage (eq.(3.29)) are higher than power generated from the fundamental component (eq.(3.28)).

Compare Fourier Coefficients between unbalanced load system (Data Case E2) and balanced load system (Data Case E3, before filtering) of each phase, the result shows that fraction of fundamental of nth harmonic for unbalanced-load

system is higher than the fraction of fundamental of nth harmonic for balanced-load system which means the unbalanced-load system contains the higher harmonic more than the balanced-load system. Therefore, the power (eq.3.29) generated by the harmonic of unbalanced-load system is higher than the power generated by the harmonic of balanced-load system which is more undesirable. So, the three phase, balanced load system must be remained in order to reduce the effect of the harmonic current. Then, the elimination of the harmonic current is followed. By concentrating in filtering, filter design and optimization of filter parameter can be studied in the future.

BIBLIOGRAPHY

[1] Bonneville Power Administration, Division of System Engineering, Methods Development Branch, Route EOGB. **Electromagnetic Transient Programs (EMTP) Rule Book.** June, 1984.

[2] Gyugyi, Laszlo; Taylor Jr., Edgar R. "Characteristics of Thyristor-Controlled Shunt Compensators for Power Transmission System Application." **IEEE. Transactions on Power Apparatus and Systems**, Vol. Pas-99, No. 5, Sept./Oct. 1980, pp. 1795-1804.

[3] Gyugyi, Laszlo; Otto, R.A.; Putman, T.H. "Principles and Applications of Static, Thyristor-Controlled Shunt Compensators." **IEEE. Transactions on Power Apparatus and Systems**, Vol. Pas-97, No. 5, Sept/Oct. 1978,

[4] Lasseter, Robert H.; Tam, Kwa-Sur. "Alternative Twelve Pulse Arrangement for Static Var Control Applications." **IEEE. Transactions on Power Apparatus and Systems**, Vol. PAS-102, No. 12, Dec. 1983, pp. 3728-3735.

[5] Romegialli, G.; Schweickardt, H.E. "The Static Var Source in EHV Transmission Systems and its Control." **Brown Boveri Revue**, Sept. 1978, pp. 585-589.

[6] Schirman, A. "Static Reactive Energy Compensators." **ACEC Review**, No. 1/1972.

[7] Weschta, A. "Influence of thyristor-Controlled Reactors on Harmonics and Resonance Effects in Power Supply Systems." **Siemens forsch.-u. Fntwickl.-Ber. Bd.**, 14(1985) Nr.2, pp.62-68.

[8] Westinghouse Electric Corporation, Switchgear division. "Static Var Generator for Flicker Control/Voltage Regulation/P.F. Correction." **File 56-000 A-75.**

APPENDICES

APPENDIX A.

CALCULATION OF THE SVC SUSCEPTANCE

EXAMPLE OF CALCULATION THE SVC SUSCEPTANCES

From chapter II eq.(2.7) to (2.9), the Wye-connected load can be transformed to the delta-connected load.

$$Z_{AB} = (Z_A Z_B + Z_B Z_C + Z_C Z_A)/Z_C$$
$$= 16.862+j12.708 \quad \text{ohms}$$

$$Z_{BC} = (Z_A Z_B + Z_B Z_C + Z_C Z_A)/Z_A$$
$$= 14.74+j15.114 \quad \text{ohms}$$

$$Z_{CA} = (Z_A Z_B + Z_B Z_C + Z_C Z_A)/Z_B$$
$$= 15.906+j13.899 \quad \text{ohms}$$

Calculate the admittance of the delta-connected load of each phase:

$$Y_{AB} = 1/Z_{AB}$$
$$= 1/(16.862+j12.708) \quad \text{mhos}$$
$$= 0.038-j0.028 \quad \text{mhos}$$

$$Y_{BC} = 1/Z_{BC}$$
$$= 1/(14.754+j5.114) \quad \text{mhos}$$
$$= 0.033-j0.034 \quad \text{mhos}$$

$$Y_{CA} = 1/Z_{CA}$$
$$= 1/(15.906+j13.899) \quad \text{mhos}$$
$$= 0.035-j0.031 \quad \text{mhos}$$

From eq. (2.13)

$$Y = G+jB$$

Therefore,

$$G_{AB} = 0.038 \quad \text{mhos}$$
$$B_{AB} = -0.028 \quad \text{mhos}$$
$$G_{BC} = 0.033 \quad \text{mhos}$$
$$B_{BC} = -0.034 \quad \text{mhos}$$
$$G_{CA} = 0.035 \quad \text{mhos}$$
$$B_{CA} = -0.031 \quad \text{mhos}$$

From the equations (2.1) to (2.3), calculate the admittance of the SVC of each phase:

$$B_{AB}^{(c)} = 0.028 + (0.035-0.033)/\sqrt{3}$$
$$= 0.029 \quad \text{mhos}$$

In the same way,

$$B_{BC}^{(c)} = 0.035 \quad \text{mhos}$$
$$B_{CA}^{(c)} = 0.028 \quad \text{mhos}$$

From the equations (2.3) to (2.6),

$$0.029 = \omega C_{AB} - 1/\omega L_{AB}$$
$$0.035 = \omega C_{BC} - 1/\omega L_{BC}$$
$$0.028 = \omega C_{CA} - 1/\omega L_{CA}$$

APPENDIX B.

FORMAT OF THE LINE CONSTANTS ROUTINE

DATA CASE B1. SINGLE PHASE TRANSMISSION LINE

DATA CASE B2. THREE PHASE TRANSMISSION LINE

FORMAT OF THE LINE CONSTANTS ROUTINE IN EMTP

Appendix B. Data Case B1 shows the Line Constants Routine data case of the single phase transmission line and Data Case B2 shows the Line Constants Routine data case for the three phase transmission line.

The format of the Line constants Routine data case follows below:

BEGIN NEW DATA CASE	: tell the EMTP to begin the new data case.
LINE CONSTANTS	: transfer control to the overlay in question.
ENGLISH	: the unit we use in the data case (or METRIC).
BRANCH NAMES	: optional card which name the nodes of allthe branches representing theline can be used (must type 44 in column 66-68 of the frequency card. PI-circuit will be generated in LUNIT 7.).

¦

¦

CONDUCTOR CONFIGURATION: transmission line description.

¦

¦

BLANK CARD	: blank card ending conductor cards.
FREQUENCY CARD	: specify the earth resistivity and the frequency for which Line Constants to be calculated.
BLANK CARD	: blank card ending frequency card.
BLANK CARD	: blank card ending Line Constant routine.
BEGIN NEW DATA CASE	: begin new data case.
BLANK CARD	: blank card terminating the EMTP.

DATA CASE B1. SINGLE PHASE TRANSMISSION LINE

```
STORE
C     ======================================================================
C     ------------ LINE CONSTANTS INPUT `1PHLIN.INP', 1 PHASE TRANSMISSION
C     ------------ LINE, 10 MILES LONG, 3 FEET SPACING, 24 FEET
C     ------------ HEIGH, 4 FEET SAG, EARTH RESISTIVITY=100 OHM-METER.
C     ======================================================================
C
LINE CONSTANTS
ENGLISH
BRANCH  A-1A  A-2A
C
C   5678911234567892123456789312345678941234567895123456789612345678971234567898
C     ------------ CONDUCTOR CARDS FOR PHASE A OF THE TRANSMISSION LINE
  1 0.5 0.386    4         0.563   -1.5    24.0    20.0
  0 0.5 0.386    4         0.563    1.5    24.0    20.0
BLANK CARD ENDING THE CONDUCTOR CARDS
C
C     ======================================================================
C     ------------ THE FREQUENCY CARD
C     ------------ REQUEST THE PI-CIRCUITS PUNCHED OUT ON FOR07.DAT
C     ======================================================================
C
100.0   60.0                1    1    1     0              00        44 1
BLANK CARD ENDING THE FREQUENCY CARD
BLANK CARD ENDING THE LINE CONSTANTS CASE
C
BEGIN NEW DATA CASE
BLANK
```

DATA CASE B2. THREE PHASE TRANSMISSION LINE

```
STORE
C     ==================================================================
C     ------------ LINE CONSTANTS INPUT `3PHLIN.INP', 3 PHASE TRANSMISSION
C     ------------ LINE, 10 MILES LONG, 3 FEET EQUILATERAL SPACING, 24 FEET
C     ------------ HEIGH, 4 FEET SAG, EARTH RESISTIVITY=100 OHM-METER.
C     ==================================================================
C
LINE CONSTANTS
ENGLISH
BRANCH  A-1A  A-2A  A-1B  A-2B  A-1C  A-2C
C
C   5678911234567892123456789312345678941234567895123456789612345678971234567898
C     ------------ CONDUCTOR CARDS FOR PHASE A, B, C OF THE TRANSMISSION LINE
  1 0.5 0.386    4        0.563   -1.5    24.0    20.0
  2 0.5 0.386    4        0.563    0.0    26.5981 22.5981
  3 0.5 0.386    4        0.563    1.5    24.0    20.0
BLANK CARD ENDING THE CONDUCTOR CARDS
C
C     ==================================================================
C     ------------ THE FREQUENCY CARD
C     ------------ REQUEST THE PI-CIRCUITS PUNCHED OUT ON FOR07.DAT
C     ==================================================================
C
100.0   60.0                1    1    1     0              00       44 1
BLANK CARD ENDING THE FREQUENCY CARD
BLANK CARD ENDING THE LINE CONSTANTS CASE
C
BEGIN NEW DATA CASE
BLANK
```

APPENDIX C.

DATA CASE C1. LINE CONSTANTS ROUTINE OUTPUT FOR SINGLE PHASE TRANSMISSION LINE

DATA CASE C2. LINE CONSTANTS ROUTINE OUTPUT FOR THREE PHASE TRANSMISSION LINE

DATA CASE C1. LINE CONSTANTS ROUTINE OUTPUT

FOR SINGLE PHASE TRANSMISSION LINE

```
ELECTROMAGNETIC TRANSIENTS PROGRAM(EMTP). DEC TOPS-10 TRANSLATION AS USED BY OREGON STATE UNIVERSITY IN CORVALLIS,OREGON,U.S.A.
EMTP DATA INPUT IS EXPECTED TO BE ON  FOR20.DAT . INSTEAD OF TERMINAL DISPLAY, THE EMTP OUTPUT MAY BE REQUESTED TO BE STORED ON
THE FILE  FOR06.DAT  BY PRECEDING THE DATA INPUT CARDS WITH A CARD ON WHICH  "STORE"  IS TYPED IN COLUMNS 1 TO 5.
DATE (MM/DD/YY) AND TIME OF DAY (HH.MM.SS) = 08/06/85  16.09. 2. UPON REQUEST THE PLOT DATA FILE CAN BE STORED IN : 160902.PL4
FOR INFORMATION, CONSULT THE 840-PAGE EMTP RULE BOOK DATED   MARCH,   1983.          PROGRAM VERSION =  "M39."  OR JUST BEFORE.
INDEPENDENT LIST LIMITS FOLLOW.   TOTAL LENGTH OF    /LABEL/   EQUALS    74563  INTEGER WORDS.      502   600  1000   200  5000
    80  1100  3500   150   320   100   100    10   920   100    80     8    10  3200  1300   200   300  8000     6   800   100  100
-----------------------------------------+-----------------------------------------------------------------------------------------
DESCRIPTIVE INTERPRETATION OF NEW-CASE INPUT DATA 1 INPUT DATA CARD IMAGES PRINTED BELOW, ALL 80 COLUMNS, CHARACTER BY CHARACTER.
                                                  0         1         2         3         4         5         6         7         8
                                                  0         0         0         0         0         0         0         0         0
-----------------------------------------+-----------------------------------------------------------------------------------------
                                                  1STORE
                                                  1C    ==================================================================
+COMMENT CARD.                                    1C    ------------ LINE CONSTANTS INPUT `1PHLIN.INP', 1 PHASE TRANSMISSION
+COMMENT CARD.                                    1C    ------------ LINE, 10 MILES LONG, 3 FEET SPACING, 24 FEET
+COMMENT CARD.                                    1C    ------------ HEIGH, 4 FEET SAG, EARTH RESISTIVITY=100 OHM-METER.
+COMMENT CARD.                                    1C    ==================================================================
+COMMENT CARD.                                    1C
+COMMENT CARD.                                    1C
+COMMENT CARD.                                    1LINE CONSTANTS
+REQUEST FOR LINE-CONSTANTS SUPPORTING PROG.   84
+REQUEST CARD FOR ENGLISH UNITS ON ALL DATA.      1ENGLISH
+BUS NAMES FOR EACH PHASE.                        1BRANCH  A-1A  A-2A
+COMMENT CARD.                                    1C
+COMMENT CARD.                                    1C   5678911234567892123456789312345678941234567895123456789612345678971234567898
+COMMENT CARD.                                    1C    ------------ CONDUCTOR CARDS FOR PHASE A OF THE TRANSMISSION LINE
+LINE-CONDUCTOR CARD.  0.500E+00  0.386E+00   4  1  1 0.5 0.386    4        0.563   -1.5    24.0    20.0
+LINE-CONDUCTOR CARD.  0.500E+00  0.386E+00   4  1  0 0.5 0.386    4        0.563    1.5    24.0    20.0
+BLANK CARD TERMINATING CONDUCTOR CARDS.          1BLANK CARD ENDING THE CONDUCTOR CARDS
+COMMENT CARD.                                    1C
+COMMENT CARD.                                    1C    ==================================================================
+COMMENT CARD.                                    1C    ------------ THE FREQUENCY CARD
+COMMENT CARD.                                    1C    ------------ REQUEST THE PI-CIRCUITS PUNCHED OUT ON FOR07.DAT
+COMMENT CARD.                                    1C    ==================================================================
+COMMENT CARD.                                    1C
```

```
                                                  1100.0   60.0                1    1    1     0              00        44 1
+FREQUENCY CARD.  0.100E+03  0.600E+02  0.000E+00


 LINE-CONDUCTOR TABLE AFTER SORTING AND INITIAL PROCESSING.
 TABLE   PHASE   SKIN EFFECT    RESISTANCE   REACTANCE-DATA SPECIFICATION     DIAMETER   HORIZONTAL   AVG HEIGHT   CONDUCTOR
   ROW  NUMBER        R-TYPE    R (OHM/MI)   X-TYPE      X(OHM/MI) OR GMR     (INCHES)     X (FEET)     Y (FEET)       NAME
     1       1       0.50000       0.38600        4              0.000000      0.56300       -1.500       21.333
     2       0       0.50000       0.38600        4              0.000000      0.56300        1.500       21.333

0FOLLOWING MATRICES ARE FOR EARTH RESISTIVITY=  100.00 OHM-M AND FREQUENCY=        60.00 HZ. CORRECTION FACTOR=  0.000001
0
0                                                   FOR THE SYSTEM OF PHYSICAL CONDUCTORS
+                      CAPACITANCE MATRIX (FARAD/MILE)
                               ROWS AND COLUMNS PROCEED IN SAME ORDER AS SORTED INPUT
0  1   0.13637E-07
0  2  -0.48279E-08   0.13637E-07
0
0                                                   FOR THE SYSTEM OF EQUIVALENT PHASE CONDUCTORS
+                          IMPEDANCE MATRIX (OHM/MILE)
                               ROWS AND COLUMNS PROCEED IN SAME ORDER AS SORTED INPUT
0  1   0.52413E+00
       0.99420E+00


 MODAL PARAMETERS AT FREQ =   0.60000E+02 HZ


 MODE   RESISTANCE  REACTANCE  SUSCEPTANCE              SURGE IMPEDANCE(OHM)          VELOCITY  ATTENUATION
          OHM/MILE    OHM/MILE   S/MILE        REAL          IMAG       LOSSLESS     MILE/SEC  NEPER/MILE
 CURRENT TRANSFORMATION MATRIX BEFORE ZEROING THE IMAGINARY PART:


     REAL COMPONENTS, ROW BY ROW
  0.10000E+01


    IMAGINARY COMPONENTS, ROW BY ROW
  0.00000E+00
   1     0.52413E+00 0.99420E+00 0.51412E-05 0.45387E+03-0.11231E+03 0.43975E+03 0.16156E+06 0.57741E-03
```

```
EIGENVECTOR MATRIX TI FOR CURRENT TRANSFORMATION I(PHASE)=TI*I(MODE)

     REAL COMPONENTS, ROW BY ROW
  0.10000E+01

    IMAGINARY COMPONENTS, ROW BY ROW
  0.00000E+00

ZSURGE IN PHASE DOMAIN ( R & IMAG. PART OF TI IGNORED)
  0.43975E+03
                                                    1BLANK CARD ENDING THE FREQUENCY CARD
+BLANK CARD TERMINATING FREQUENCY CARDS.
                                                    1BLANK CARD ENDING THE LINE CONSTANTS CASE
+BLANK CARD TERMINATING LINE-CONSTANTS CASES.
```

```
$VINTAGE, 1
 1A-1A  A-2A                    0.52413E+00     0.99420E+00     0.13637E-01
$VINTAGE, 0
C    PUNCHED OUTPUT OF K. C. LEE'S LINE  WHICH BEGAN AT  16.09. 2  08/06/85
C    THE TRANSFORMATION MATRIX WAS CALCULATED AT   0.60000E+02 HZ.
C ENGLISH
C   1 0.5 0.386    4        0.563   -1.5    24.0    20.0
C   0 0.5 0.386    4        0.563    1.5    24.0    20.0
C
$VINTAGE, 1
-1A-1A  A-2A               0.52413E+00 0.43975E+03 0.16156E+06 0.00000E+00 1  1
$VINTAGE, 0
  1.00000000
  0.00000000
```

DATA CASE C2. LINE CONSTANTS ROUTINE OUTPUT

FOR THREE PHASE TRANSMISSION LINE

```
$VINTAGE, 1
 1A-1A  A-2A                    0.48054E+00     0.14500E+01     0.14672E-01
 2A-1B  A-2B                    0.93651E-01     0.83113E+00    -0.38751E-02
                                0.48035E+00     0.14502E+01     0.14509E-01
 3A-1C  A-2C                    0.93742E-01     0.83103E+00    -0.37929E-02
                                0.93651E-01     0.83113E+00    -0.38751E-02
                                0.48054E+00     0.14500E+01     0.14672E-01
$VINTAGE, 0
C     PUNCHED OUTPUT OF K. C. LEE'S LINE  WHICH BEGAN AT  23.35. 3  08/05/85
C     THE TRANSFORMATION MATRIX WAS CALCULATED AT   0.60000E+02 HZ.
C ENGLISH
C    1 0.5 0.386    4        0.563   -1.5    24.0    20.0
C    2 0.5 0.386    4        0.563    0.0    26.5981 22.5981
C    3 0.5 0.386    4        0.563    1.5    24.0    20.0
C
$VINTAGE, 1
-1A-1A  A-2A                0.66641E+00 0.10891E+04 0.13153E+06 0.00000E+00 1  3
-2A-1B  A-2B                0.38679E+00 0.29818E+03 0.17399E+06 0.00000E+00 1  3
-3A-1C  A-2C                0.38669E+00 0.29819E+03 0.17400E+06 0.00000E+00 1  3
$VINTAGE, 0
  0.58990997  0.70708835 -0.40505802
  0.00000000  0.00000000  0.00000000
  0.55137321  0.00003758  0.81967498
  0.00000000  0.00000000  0.00000000
  0.58990999 -0.70712520 -0.40504436
  0.00000000  0.00000000  0.00000000
```

APPENDIX D.

FORMAT OF THE MAIN DATA CASE

DATA CASE D1. SINGLE PHASE SYSTEM

DATA CASE D2. THREE PHASE, UNBALANCED LOAD SYSTEM

DATA CASE D3. THREE PHASE, BALANCED LOAD SYSTEM

FORMAT OF THE MAIN DATA CASE

In order to use the output from the Line Constant Routine generated in LUNIT 7 for the main data case, the length of the transmission line has to be multiplied to the output. Appendix D shows the complete data case for three phase unbalanced load system (Data Case D1), three phase balanced load system; including the output from the Line Constants Routine which is inserted into the main data cases. Main Data Case

The structure of the data case for the EMTP:

FIRST MISCELLENEOUS DATA CARD	: define time-step, termination time, power frequency, non-zero tolerance, start-time.
SECOND MISCELLENEOUS DATA CARD	: define the Kth step printing out, frequency of the plotted transient simulation, ect.
TACS HYBRID	: transfer control to TACS.

¦

¦

SIGNAL SOURCES

```
    ¦
    ¦
REQUEST GRID SIGNALS OUTPUT
BLANK CARD ENDING TACS FUNCTION
CARDS FOR LINEAR AND NONLINEAR BRANCHES
CARDS FOR TRANSFORMERS
CARDS FOR TRANSMISSION LINES.     : the result from Line
                                    Constants Routine
                                    generated in LUNIT 7.
BLANK CARD ENDING BRANCH CARDS
CARDS FOR ELECTRIC-NETWORKS SWITCHES : define the
                                       electrical valve.
BLANK CARD ENDING SWITCH CARDS
SOURCE CARDS FOR ELECTRICAL NETWORK
BLANK CARD ENDING SOURCE CARD
NODE VOLTAGE REQUEST CARD
BLANK CARD ENDING NODE VOLTAGE REQUEST CARD

FOURIER ANALYSIS OF THE VOLTAGES AND CURRENTS
                        : request Fourier Coefficients
                          of the desired voltages and
                          current.

    ¦
    ¦
BLANK CARD ENDING PLOT OUTPUT REQUEST
BEGIN NEW DATA CASE
```

BLANK CARD ENDING DATA CASE

Appendix D. Data Case D1, D2, D3 show the data cases for the single phase, unbalanced three phase, and balanced three phase systems.

Appendix E. shows the outputs from the data cases in Appendix D.

DATA CASE D1. SINGLE PHASE SYSTEM

```
BEGIN NEW DATA CASE
C     ************ SIGLE PHASE SYSTEM SIMULATION. USE PHASE A OF THE
C     ************ THREE PHASE SYSTEM AS THE MODEL
C     ------------ THE DATA CASE 'SINGLE.SVC'
C     ------------ PLOTTED FILE NAME '200704.PLL'
C     ==================================================================
C     ------------ FIRST MISCELLENEOUS DATA CARD
.1852E-3  .60E-1    60.0     0.0 0.1E-06
C
C     ------------ SECOND MISCELLENEOUS DATA CARD
C 345678901234567890123456789012345678901234567890123456789012345678901234567890
     20        1        1        1        0        1        0        1        0        0
C
C     ==================================================================
TACS HYBRID
C     ------------ SIGNAL SOURCE
23GATE1          1.0     .01666     10E-5                    0.000675
23GATE2          1.0     .01666     10E-5                    0.009009
C
C     ==================================================================
C     ------------ REQUEST EVERY GRID SIGNAL OUTPUT
33GATE1 GATE2
BLANK CARD ENDING TACS FUNCTION
C
C     ==================================================================
C     ------------ SYNCHRONOUS REACTANCES OF THE GENERATOR
C     ------------ CONNECTED BETWEEN BUS 'A-0A' TO BUS 'A-1A'
  A-0A  A-1A                    0.0021                                    3
C
C     ------------ BRANCH CARD FOR LOAD
  A-3A                    5.64  4.232                                     3
C
C     ------------ 0.001 OHM RESISTOR FOR CURRENT IN SVC BRANCH BETWEEN
C     ------------ PHASE A AND PHASE B
  A-3A  A-4A                .001                                          1
C
C     ------------ DURING THE TRANSIENT CONDITION
C     ------------ 0.001 OHM RESISTORS FOR ISOLATING THE THYRISTORS IN
C     ------------ PHASE A TO GROUND
  A-5A  A-7A                .001
  A-8A                      .001                                          1
C                                                                         1
C     ------------ 0.001 OHMS FOR DETECTING THE LINE LOAD CURRENT OF EACH PHASE
  A-9A  A-3A                .001                                          1
C
C     ------------ LINE CONSTANTS OUTPUT FROM '1PHLIN.CON'
C     ------------ 10 MILES LONG.
$VINTAGE, 1
 1A-1A  A-2A                0.05241E+01     0.99420E+01     0.13637E+01
$VINTAGE, 0
C
C     ==================================================================
C     ------------ STATIC VARS COMPENSATOR BRANCH OF PHASE A
  A-4A                                38.46
  A-4A  A-5A                68.96                                         3
C                                                                         3
C     ------------ SNUBBER CIRCUIT CONNECTED FROM BUS A-5A TO GROUND
C     ------------ PARALLEL TO THE THYRISTORS
  A-5A                    2.6E+3      0.1926                              1
C
C     ------------ SINGLE PHASE TRANSFORMER GROUNDED,
C     ------------ 6.928 MVA, 6.928 KV : 2.656KV, LINEAR MODELLING.
  TRANSFORMER             200.0 1.2E+5G-1A  2.4E+3                        3
    200.0          1.2E5
```

```
                                                                                1
C     ------------ SINGLE PHASE TRANSFORMER GROUNDED.
C     ------------ 6.928 MVA. 6.928 KV : 2.656KV, LINEAR MODELLING.
  TRANSFORMER              200.0 1.2E+5G-1A  2.4E+3                            3
    200.0            1.2E5
            9999
01A-2A                     .024  0.24   6.928                                 1
02A-9A                     .00353 .0353 2.656                                 1
BLANK CARD TERMINATING BRANCH CARDS
C
C     ==================================================================
C     ------------ SWITCH CARDS
11A-5A  A-8A          0.0        0.0        0.0                    GATE1     13
11      A-7A          0.0        0.0        0.0                    GATE2     13
BLANK CARD TERMINATING SWITCH CARDS
C
C     ==================================================================
C     ------------ SINGLE PHASE SOURCE
C     ------------ GROUNDED CIRCUIT. INTERNAL BUSES.
14A-0A      6.93E+3      60.0      0.0        0                    -1.0
BLANK CARD TERMINATING SOURCE CARDS
C
C     ==================================================================
C     ------------ REQUEST NODE VOLTAGES
  A-9A
BLANK CARD ENDING NODE VOLTAGE REQUEST CARD
C
C     ------------ FOURIER ANALYSIS OF THE SVC CURRENTS OF THE SYSTEM
  FOURIER ON
 193                     A-3A  A-4A
             1.0       0.03            0.046761
 193                     A-4A  A-5A
             1.0       0.03            0.046761
 193                     A-4A
             1.0       0.03            0.046761
BLANK CARD ENDING PLOT OUTPUT REQUEST
C     ==================================================================
BEGIN NEW DATA CASE
BLANK
```

DATA CASE D2.

THREE PHASE, UNBALANCED LOAD SYSTEM

```
STORE
BEGIN NEW DATA CASE
C     ==================================================================
C     $$$$$$$$$$$$ THIS IS THE MOST CORRECT DATA CASE FOR UNBALANCED
C     $$$$$$$$$$$$ THREE PHASE LOAD ------------------------------
C     ==================================================================
C     ************ THIS DATA CASE GIVES THE LINE VOLTAGE AND LINE CURRENT
C     ************ IN PHASE TOGETHER OF EVERY PHASE AND HIGH P.F. AT
C     ************ PHASOR SOLUTION OF EVERY PHASE
C     ************ THE REAL DATA CASE, GIVE THE HIGH INDUCTIVE CURRENT
C     ------------ GROUNDED NETWORK WITH THE SVC BRANCHES
C     ------------ 3 PHASE SYSTEM, GENERATOR GROUNDED, WYE-WYE CONNECTED
C     ------------ GROUNDED TRANSFORMER, GROUNDED 3 PHASE LOAD.
C     ------------ THE DATA CASE FOR THREE PHASE SYSTEM, ONE 3 PHASE
C     ------------ GENERATOR, SHORT DISTORTIONLESS TRANSMISSION LINE,
C     ------------ 12 MVA THREE PHASE TRANSFORMER, UNBALANCE THREE PHASE LOAD
C     ==================================================================
C     ------------ FIRST MISCELLENEOUS DATA CARD
.1852E-3  .60E-1    60.0        0 0.1E-06
C
C     ------------ SECOND MISCELLENEOUS DATA CARD
C 345678901234567890123456789012345678901234567890123456789012345678901234567890
     20        1        1        1        0        1        0        1        0        0
C
C     ==================================================================
TACS HYBRID
C     ------------ SIGNAL SOURCE
23GATE1          1.0     .01666     10E-5                    -.001574
23GATE2          1.0     .01666     10E-5                    0.006759
23GATE3          1.0     .01666     10E-5                    0.003981
23GATE4          1.0     .01666     10E-5                    0.012314
23GATE5          1.0     .01666     10E-5                    0.009537
23GATE6          1.0     .01666     10E-5                    0.001204
C
C     ==================================================================
C     ------------ REQUEST EVERY GRID SIGNAL OUTPUT
33GATE1 GATE2 GATE3 GATE4 GATE5 GATE6
BLANK CARD ENDING TACS FUNCTION
C
C     ==================================================================
C     ------------ SYNCHRONOUS REACTANCES OF EACH PHASE OF THE GENERATOR
C     ------------ CONNECTED BETWEEN BUS `A-0 ' TO BUS `A-1 '
  A-0A  A-1A                    0.0021                                    3
  A-0B  A-1B  A-0A  A-1A                                                  3
  A-0C  A-1C  A-0A  A-1A                                                  3
C
C     ------------ BRANCH CARD FOR LOAD
  A-3A                    5.64  4.232                                     3
  A-3B                    5.28  4.665                                     3
  A-3C                    4.94  5.037                                     3
C
C     ------------ SHUNT RESISTORS BETWEEN THE LINE FOR OBSERVING THE
C     ------------ LINE VOLTAGES.
  A-9A  A-9B              5.0E06                                          2
  A-9A  A-9C              5.0E06                                          2
  A-9B  A-9C              5.0E06                                          2
C     ------------ 0.001 OHM RESISTOR FOR CURRENT IN SVC BRANCH BETWEEN
C     ------------ PHASE A AND PHASE B
  A-3A  A-4A                .001                                          1
C     ------------ PHASE B AND PHASE C
  A-3B  A-4B                .001                                          1
```

```
C
C     ------------ SHUNT RESISTORS BETWEEN THE LINE FOR OBSERVING THE
C     ------------ LINE VOLTAGES.
  A-9A  A-9B                5.0E06                                          2
  A-9A  A-9C                5.0E06                                          2
  A-9B  A-9C                5.0E06                                          2
C     ------------ 0.001 OHM RESISTOR FOR CURRENT IN SVC BRANCH BETWEEN
C     ------------ PHASE A AND PHASE B
  A-3A  A-4A                  .001                                          1
C     ------------ PHASE B AND PHASE C
  A-3B  A-4B                  .001                                          1
C     ------------ PHASE C AND PHASE A
  A-3C  A-4C                  .001                                          1
C
C     ------------ DURING THE TRANSIENT CONDITION
C     ------------ 0.001 OHM RESISTORS FOR ISOLATING THE THYRISTORS IN
C     ------------ THE SAME PHASE.
C     ------------ PHASE A AND PHASE B
  A-5A  A-7A                  .001                                          1
  A-8A  A-3B                  .001                                          1
C     ------------ PHASE B AND PHASE C
  A-5B  A-7B                  .001                                          1
  A-8B  A-3C                  .001                                          1
C     ------------ PHASE C AND PHASE A
  A-5C  A-7C                  .001                                          1
  A-8C  A-3A                  .001                                          1
C
C     ------------ 0.001 OHMS FOR DETECTING THE LINE LOAD CURRENT OF EACH PHASE
  A-9A  A-3A                  .001                                          1
  A-9B  A-3B                  .001                                          1
  A-9C  A-3C                  .001                                          1
C
C     ------------ LINE CONSTANTS OUTPUT
C     ------------ 3 FEET EQUILATERAL SPACING, 10 MILES LONG.
$VINTAGE, 1
 1A-1A  A-2A                  0.48504E+01     0.14500E+02     0.14672E+00
 2A-1B  A-2B                  0.93651E+00     0.83113E+01    -0.38751E-01
                              0.48035E+01     0.14502E+02     0.14509E+00
 3A-1C  A-2C                  0.93742E+00     0.83103E+01    -0.37929E-01
                              0.93651E+00     0.83113E+01    -0.38751E-01
                              0.48054E+01     0.14500E+02     0.14672E+00
$VINTAGE, 0
C
C     ==================================================================
C     ------------ STATIC VARS COMPENSATOR BRANCH OF PHASE A-B
  A-4A  A-3B                        38.46                                   3
  A-4A  A-5A                  68.96                                         3
C     ------------ STATIC VARS COMPENSATOR BRANCH OF PHASE B-C
  A-4B  A-3C                        46.42                                   3
  A-4B  A-5B                  57.143                                        3
C     ------------ STATIC VARS COMPENSATOR BRANCH OF PHASE C-A
  A-4C  A-3A                        37.14                                   3
  A-4C  A-5C                  71.428                                        3
C
C     ------------ SNUBBER CIRCUITS PARALLEL TO THE THYRISTORS OF EACH PHASE
  A-5A  A-3B                2.6E+3      0.1926                              1
  A-5B  A-3C  A-5A  A-3B                                                    1
  A-5C  A-3A  A-5A  A-3B                                                    1
C
C     ------------ 3 PHASE TRANSFORMER WYE-WYE CONNECTED, GROUNDED,
C     ------------ 12 MVA, 12KV : 4.6KV, LINEAR MODELLING.
  TRANSFORMER               200.0 1.2E+5G-1A  2.4E+3                        3
    200.0           1.2E5
            9999
```

```
C     ------------ 3 PHASE TRANSFORMER WYE-WYE CONNECTED, GROUNDED.
C     ------------ 12 MVA, 12KV : 4.6KV, LINEAR MODELLING.
  TRANSFORMER                 200.0 1.2E+5G-1A  2.4E+3                          3
    200.0            1.2E5
             9999
01A-2A                        .024  0.24   6.928                                1
02A-9A                        .003530.0353 2.656                                1
  TRANSFORMER G-1A                       G-1B                                   3
01A-2B                                                                           1
02A-9B                                                                           1
  TRANSFORMER G-1A                       G-1C                                   3
01A-2C                                                                           1
02A-9C                                                                           1
BLANK CARD TERMINATING BRANCH CARDS
C
C     ==================================================================
C     ------------ SWITCH CARDS
11A-5A  A-8A          0.0        0.0        0.0                    GATE1      13
11A-3B  A-7A          0.0        0.0        0.0                    GATE2      13
11A-5B  A-8B          0.0        0.0        0.0                    GATE3      13
11A-3C  A-7B          0.0        0.0        0.0                    GATE4      13
11A-5C  A-8C          0.0        0.0        0.0                    GATE5      13
11A-3A  A-7C          0.0        0.0        0.0                    GATE6      13
BLANK CARD TERMINATING SWITCH CARDS
C
C     ==================================================================
C     ------------ 3 PHASE SYNCHRONOUS GENERATOR, WYE CONNECTED,
C     ------------ GROUNDED CIRCUIT, INTERNAL BUSES.
14A-0A      12.0E+3     60.0     20.0        0                    -1.0
14A-0B      12.0E+3     60.0   -100.0        0                    -1.0
14A-0C      12.0E+3     60.0    140.0        0                    -1.0
BLANK CARD TERMINATING SOURCE CARDS
C
C     ==================================================================
C     ------------ REQUEST NODE VOLTAGES
  A-9A  A-9B  A-9C
BLANK CARD ENDING NODE VOLTAGE REQUEST CARD
C
C     ------------ FOURIER ANALYSIS OF THE SVC CURRENTS OF THE SYSTEM
  FOURIER ON
 193                    A-3A  A-4A
             1.0      0.03            0.046761
 193                    A-3B  A-4B
             1.0      0.03            0.046761
 193                    A-3C  A-4C
             1.0      0.03            0.046761
 183                    A-9A  A-9B
             1.0      0.03            0.046761
 183                    A-9B  A-9C
             1.0      0.03            0.046761
 183                    A-9C  A-9A
             1.0      0.03            0.046761
BLANK CARD ENDING PLOT OUTPUT REQUEST
C     ==================================================================
BEGIN NEW DATA CASE
BLANK
```

DATA CASE D3.

THREE PHASE, BALANCED LOAD SYSTEM

```
STORE
BEGIN NEW DATA CASE
C     ==================================================================
C     ************ THIS DATA CASE GIVES THE LINE VOLTAGE AND LINE CURRENT
C     ************ IN PHASE TOGETHER OF EVERY PHASE AND HIGH P.F. AT
C     ************ PHASOR SOLUTION OF EVERY PHASE
C     ************ THE REAL DATA CASE. GIVE THE HIGH INDUCTIVE CURRENT
C     ------------ GROUNDED NETWORK WITH THE SVC BRANCHES
C     ------------ 3 PHASE SYSTEM, GENERATOR GROUNDED, WYE-WYE CONNECTED
C     ------------ GROUNDED TRANSFORMER, GROUNDED 3 PHASE LOAD.
C     ------------ THE DATA CASE FOR THREE PHASE SYSTEM. ONE 3 PHASE
C     ------------ GENERATOR, SHORT DISTORTIONLESS TRANSMISSION LINE,
C     ------------ 12 MVA THREE PHASE TRANSFORMER, BALANCED  THREE PHASE LOAD
C     ==================================================================
C     ------------ FIRST MISCELLENEOUS DATA CARD
.1852E-3   .60E-1     60.0        0 0.1E-06
C
C     ------------ SECOND MISCELLENEOUS DATA CARD
C 345678901234567890123456789012345678901234567890123456789012345678901234567890
      20        1        1        1        0        1        0        1        0        0
C
C     ==================================================================
TACS HYBRID
C     ------------ SIGNAL SOURCE
23GATE1          1.0     .01666     10E-5                    -.001574
23GATE2          1.0     .01666     10E-5                    0.006759
23GATE3          1.0     .01666     10E-5                    0.003981
23GATE4          1.0     .01666     10E-5                    0.012314
23GATE5          1.0     .01666     10E-5                    0.009537
23GATE6          1.0     .01666     10E-5                    0.001204
C
C     ==================================================================
C     ------------ REQUEST EVERY GRID SIGNAL OUTPUT
33GATE1 GATE2 GATE3 GATE4 GATE5 GATE6
BLANK CARD ENDING TACS FUNCTION
C
C     ==================================================================
C     ------------ SYNCHRONOUS REACTANCES OF EACH PHASE OF THE GENERATOR
C     ------------ CONNECTED BETWEEN BUS `A-0 ' TO BUS `A-1 '
  A-0A  A-1A                    0.0021                                    3
  A-0B  A-1B  A-0A  A-1A                                                  3
  A-0C  A-1C  A-0A  A-1A                                                  3
C
C     ------------ BALANCE THREE PHASE GROUNDED LOAD
C     ------------ BRANCH CARD FOR LOAD
  A-3A                    5.64  4.232                                     3
  A-3B                    5.64  4.232                                     3
  A-3C                    5.64  4.232                                     3
C
C     ------------ SHUNT RESISTORS BETWEEN THE LINE FOR OBSERVING THE
C     ------------ LINE VOLTAGES.
  A-9A  A-9B              5.0E06                                          2
  A-9A  A-9C              5.0E06                                          2
  A-9B  A-9C              5.0E06                                          2
C     ------------ 0.001 OHM RESISTOR FOR CURRENT IN SVC BRANCH BETWEEN
C     ------------ PHASE A AND PHASE B
```

```
  A-3B  A-4B                  .001                                                  1
C    ------------ PHASE C AND PHASE A
  A-3C  A-4C                  .001                                                  1
C
C    ------------ DURING THE TRANSIENT CONDITION
C    ------------ 0.001 OHM RESISTORS FOR ISOLATING THE THYRISTORS IN
C    ------------ THE SAME PHASE.
C    ------------ PHASE A AND PHASE B
  A-5A  A-7A                  .001                                                  1
  A-8A  A-3B                  .001                                                  1
C    ------------ PHASE B AND PHASE C
  A-5B  A-7B                  .001                                                  1
  A-8B  A-3C                  .001                                                  1
C    ------------ PHASE C AND PHASE A
  A-5C  A-7C                  .001                                                  1
  A-8C  A-3A                  .001                                                  1
C
C    ------------ 0.001 OHMS FOR DETECTING THE LINE LOAD CURRENT OF EACH PHASE
  A-9A  A-3A                  .001                                                  1
  A-9B  A-3B                  .001                                                  1
  A-9C  A-3C                  .001                                                  1
C
C    ------------ LINE CONSTANTS OUTPUT
C    ------------ 3 FEET EQUILATERAL SPACING, 10 MILES LONG.
$VINTAGE, 1
 1A-1A  A-2A                  0.48504E+01     0.14500E+02     0.14672E+00
 2A-1B  A-2B                  0.93651E+00     0.83113E+01    -0.38751E-01
                              0.48035E+01     0.14502E+02     0.14509E+00
 3A-1C  A-2C                  0.93742E+00     0.83103E+01    -0.37929E-01
                              0.93651E+00     0.83113E+01    -0.38751E-01
                              0.48054E+01     0.14500E+02     0.14672E+00
$VINTAGE, 0
C
C    ==================================================================
C    ------------ STATIC VARS COMPENSATOR BRANCH OF PHASE A-B
  A-4A  A-3B                          41.12                                         3
  A-4A  A-5A                  70.000                                                3
C    ------------ STATIC VARS COMPENSATOR BRANCH OF PHASE B-C
  A-4B  A-3C                          41.12                                         3
  A-4B  A-5B                  70.000                                                3
C    ------------ STATIC VARS COMPENSATOR BRANCH OF PHASE C-A
  A-4C  A-3A                          41.12                                         3
  A-4C  A-5C                  70.000                                                3
C
C    ------------ SNUBBER CIRCUITS PARALLEL TO THE THYRISTORS OF EACH PHASE
  A-5A  A-3B                2.6E+3      0.1926                                      1
  A-5B  A-3C  A-5A  A-3B                                                            1
  A-5C  A-3A  A-5A  A-3B                                                            1
C
C    ------------ 3 PHASE TRANSFORMER WYE-WYE CONNECTED, GROUNDED,
C    ------------ 12 MVA, 12KV : 4.6KV, LINEAR MODELLING.
  TRANSFORMER               200.0 1.2E+5G-1A  2.4E+3                                3
    200.0           1.2E5
          9999
01A-2A                      .024  0.24   6.928                                      1
02A-9A                      .003530.0353 2.656                                      1
  TRANSFORMER G-1A                    G-1B                                          3
01A-2B                                                                              1
02A-9B                                                                              1
  TRANSFORMER G-1A                    G-1C                                          3
01A-2C                                                                              1
02A-9C                                                                              1
BLANK CARD TERMINATING BRANCH CARDS
```

```
11A-5A  A-8A        0.0       0.0       0.0                    GATE1        13
11A-3B  A-7A        0.0       0.0       0.0                    GATE2        13
11A-5B  A-8B        0.0       0.0       0.0                    GATE3        13
11A-3C  A-7B        0.0       0.0       0.0                    GATE4        13
11A-5C  A-8C        0.0       0.0       0.0                    GATE5        13
11A-3A  A-7C        0.0       0.0       0.0                    GATE6        13
BLANK CARD TERMINATING SWITCH CARDS
C
C     ==================================================================
C     ------------ 3 PHASE SYNCHRONOUS GENERATOR, WYE CONNECTED,
C     ------------ GROUNDED CIRCUIT, INTERNAL BUSES.
14A-0A      12.0E+3     60.0    20.0        0                    -1.0
14A-0B      12.0E+3     60.0  -100.0        0                    -1.0
14A-0C      12.0E+3     60.0   140.0        0                    -1.0
BLANK CARD TERMINATING SOURCE CARDS
C
C     ==================================================================
C     ------------ REQUEST NODE VOLTAGES
  A-9A  A-9B  A-9C
BLANK CARD ENDING NODE VOLTAGE REQUEST CARD
C
C     ------------ FOURIER ANALYSIS OF THE SVC CURRENTS OF THE SYSTEM
  FOURIER ON
 193                    A-3A  A-4A
            1.0       0.03            0.046761
 193                    A-4A  A-5A
            1.0       0.03            0.046761
 193                    A-3B  A-4B
            1.0       0.03            0.046761
 193                    A-3C  A-4C
            1.0       0.03            0.046761
 183                    A-9A  A-9B
            1.0       0.03            0.046761
 183                    A-9B  A-9C
            1.0       0.03            0.046761
 183                    A-9C  A-9A
            1.0       0.03            0.046761
BLANK CARD ENDING PLOT OUTPUT REQUEST
C     ==================================================================
BEGIN NEW DATA CASE
BLANK
```

APPENDIX E.

DATA CASE E1. OUTPUT OF SINGLE PHASE SYSTEM

DATA CASE E2. OUTPUT OF THREE PHASE, UNBALANCED LOAD SYSTEM

DATA CASE E3. OUTPUT OF THREE PHASE, BALANCED LOAD SYSTEM

DATA CASE E1. OUTPUT OF SINGLE PHASE SYSTEM

```
ELECTROMAGNETIC TRANSIENTS PROGRAM(EMTP), DEC TOPS-10 TRANSLATION AS USED BY OREGON STATE UNIVERSITY IN CORVALLIS,OREGON,U.S.A.
EMTP DATA INPUT IS EXPECTED TO BE ON  FOR20.DAT . INSTEAD OF TERMINAL DISPLAY, THE EMTP OUTPUT MAY BE REQUESTED TO BE STORED ON
THE FILE  FOR06.DAT  BY PRECEDING THE DATA INPUT CARDS WITH A CARD ON WHICH  "STORE"  IS TYPED IN COLUMNS 1 TO 5.
DATE (MM/DD/YY) AND TIME OF DAY (HH.MM.SS) = 08/09/85  20.07. 4. UPON REQUEST THE PLOT DATA FILE CAN BE STORED IN : 200704.PL4
FOR INFORMATION, CONSULT THE 840-PAGE EMTP RULE BOOK DATED   MARCH,   1983.          PROGRAM VERSION =  "M39."  OR JUST BEFORE.
INDEPENDENT LIST LIMITS FOLLOW.   TOTAL LENGTH OF    /LABEL/   EQUALS    74563  INTEGER WORDS.      502   600  1000   200  5000
    80  1100  3500   150   320   100   100    10   920   100    80     8    10  3200  1300   200   300  8000     6   800   100  100
-----------------------------------------------+-----------------------------------------------------------------------------------
DESCRIPTIVE INTERPRETATION OF NEW-CASE INPUT DATA 1 INPUT DATA CARD IMAGES PRINTED BELOW, ALL 80 COLUMNS, CHARACTER BY CHARACTER.
                                                 0         1         2         3         4         5         6         7         8
                                                 0         0         0         0         0         0         0         0         0
-----------------------------------------------+-----------------------------------------------------------------------------------
                                                 1STORE
                                                 1BEGIN NEW DATA CASE
+MARKER CARD PRECEDING NEW DATA CASE.
                                                 1C    ************ SIGLE PHASE SYSTEM SIMULATION, USE PHASE A OF THE
+COMMENT CARD.
                                                 1C    ************ THREE PHASE SYSTEM AS THE MODEL
+COMMENT CARD.
                                                 1C    ------------ THE DATA CASE 'SINGLE.SVC'
+COMMENT CARD.
                                                 1C    ==========================================================================
+COMMENT CARD.
                                                 1C    ------------ FIRST MISCELLENEOUS DATA CARD
+COMMENT CARD.
                                                 1.1852E-3  .60E-1    60.0     0.0 0.1E-06
+MISC. DATA.    0.185E-03   0.600E-01   0.600E+02
                                                 1C
+COMMENT CARD.
                                                 1C    ------------ SECOND MISCELLENEOUS DATA CARD
+COMMENT CARD.
                                                 1C 345678901234567890123456789012345678901234567890123456789012345678901234567890
+COMMENT CARD.
                                                 1      20       1       1       1       0       1       0       1       0       0
+MISC. DATA.    20    1  1  1  0  1  0  1  0  0
                                                 1C
+COMMENT CARD.
                                                 1C    ==========================================================================
+COMMENT CARD.
                                                 1TACS HYBRID
+TACS HYBRID SETUP.  TACS DATA CARDS FOLLOW.
                                                 1C    ------------ SIGNAL SOURCE
+COMMENT CARD.
                                                 123GATE1          1.0    .01666     10E-5                    0.000675
+TACS SOURCE.   0.100E+01   0.100E-03   0.167E-01
                                                 123GATE2          1.0    .01666     10E-5                    0.009009
+TACS SOURCE.   0.100E+01   0.100E-03   0.167E-01
                                                 1C
+COMMENT CARD.
```

```
+COMMENT CARD.
+COMMENT CARD.
+TACS VARIABLES FOR EMTP OUTPUT VECTOR.
+BLANK CARD TERMINATING ALL TACS DATA CARDS .
+COMMENT CARD.
+COMMENT CARD.
+COMMENT CARD.
+COMMENT CARD.
+SERIES R-L-C.     0.000E+00  0.210E-02  0.000E+00
+COMMENT CARD.
+COMMENT CARD.
+SERIES R-L-C.     0.564E+01  0.423E+01  0.000E+00
+COMMENT CARD.
+COMMENT CARD.
+COMMENT CARD.
+SERIES R-L-C.     0.100E-02  0.000E+00  0.000E+00
+COMMENT CARD.
+COMMENT CARD.
+COMMENT CARD.
+COMMENT CARD.
+SERIES R-L-C.     0.100E-02  0.000E+00  0.000E+00
+SERIES R-L-C.     0.100E-02  0.000E+00  0.000E+00
+COMMENT CARD.
+COMMENT CARD.
+SERIES R-L-C.     0.100E-02  0.000E+00  0.000E+00
+COMMENT CARD.
```

```
1C    ==================================================================
1C    ------------ REQUEST EVERY GRID SIGNAL OUTPUT
133GATE1 GATE2
1BLANK CARD ENDING TACS FUNCTION
1C
1C    ==================================================================
1C    ------------ SYNCHRONOUS REACTANCES OF THE GENERATOR
1C    ------------ CONNECTED BETWEEN BUS 'A-0A' TO BUS 'A-1A'
1  A-0A  A-1A                    0.0021                                  3
1C
1C    ------------ BRANCH CARD FOR LOAD
1  A-3A                    5.64  4.232                                   3
1C
1C    ------------ 0.001 OHM RESISTOR FOR CURRENT IN SVC BRANCH BETWEEN
1C    ------------ PHASE A AND PHASE B
1  A-3A  A-4A                .001                                         1
1C
1C    ------------ DURING THE TRANSIENT CONDITION
1C    ------------ 0.001 OHM RESISTORS FOR ISOLATING THE THYRISTORS IN
1C    ------------ PHASE A TO GROUND
1  A-5A  A-7A                .001                                         1
1  A-8A                      .001                                         1
1C
1C    ------------ 0.001 OHMS FOR DETECTING THE LINE LOAD CURRENT OF EACH PHASE
1  A-9A  A-3A                .001                                         1
1C
```

```
+COMMENT CARD.

+COMMENT CARD.

+NEW MOLDAT =   1      (DATA VINTAGE)

+1ST OF PI-CKT.   0.524E+00  0.994E+01  0.136E+01

+NEW MOLDAT =   0      (DATA VINTAGE)

+COMMENT CARD.

+COMMENT CARD.

+COMMENT CARD.

+SERIES R-L-C.    0.000E+00  0.000E+00  0.385E+02

+SERIES R-L-C.    0.000E+00  0.690E+02  0.000E+00

+COMMENT CARD.

+COMMENT CARD.

+COMMENT CARD.

+SERIES R-L-C.    0.260E+04  0.000E+00  0.193E+00

+COMMENT CARD.

+COMMENT CARD.

+COMMENT CARD.

+SAT. XFORMER.    0.200E+03  0.120E+06  0.240E+04

+    BREAKPOINT.    0.20000E+03    0.12000E+06

+SPECIAL TERMINATION-OF-POINTS CARD.

+  WINDING 1.
+  WINDING 1.   0.2400E-01  0.2400E+00  0.6928E+01

+  WINDING 2.
+  WINDING 2.   0.3530E-02  0.3530E-01  0.2656E+01

+BLANK CARD TERMINATING BRANCH CARDS.

+COMMENT CARD.
```

```
1C    ------------ LINE CONSTANTS OUTPUT FROM '1PHLIN.CON'

1C    ------------ 10 MILES LONG.

1$VINTAGE, 1

1 1A-1A  A-2A                    0.05241E+01     0.99420E+01     0.13637E+01

1$VINTAGE, 0

1C

1C    ==================================================================

1C    ------------ STATIC VARS COMPENSATOR BRANCH OF PHASE A

1  A-4A                                38.46                                3

1  A-4A  A-5A                     68.96                                     3

1C

1C    ------------ SNUBBER CIRCUIT CONNECTED FROM BUS A-5A TO GROUND

1C    ------------ PARALLEL TO THE THYRISTORS

1  A-5A                    2.6E+3      0.1926                               1

1C

1C    ------------ SINGLE PHASE TRANSFORMER GROUNDED,

1C    ------------ 6.928 MVA, 6.928 KV : 2.656KV, LINEAR MODELLING.

1  TRANSFORMER             200.0 1.2E+5G-1A  2.4E+3                         3

1    200.0          1.2E5

1            9999

101A-2A                    .024  0.24   6.928                               1

102A-9A                    .00353 .0353 2.656                               1

1BLANK CARD TERMINATING BRANCH CARDS

1C
```

```
+COMMENT CARD.
+COMMENT CARD.
+VALVE, TACS GRID= 'GATE1 '
+VALVE, TACS GRID= 'GATE2 '
+BLANK CARD TERMINATING SWITCH CARDS.
+COMMENT CARD.
+COMMENT CARD.
+COMMENT CARD.
+COMMENT CARD.
+SOURCE.    0.69E+04  0.60E+02  0.00E+00 -0.10E+01
+BLANK CARD TERMINATING SOURCE CARDS.
```

```
1C    ==================================================================
1C    ------------ SWITCH CARDS
111A-5A  A-8A        0.0       0.0       0.0                    GATE1        13
111      A-7A        0.0       0.0       0.0                    GATE2        13
1BLANK CARD TERMINATING SWITCH CARDS
1C
1C    ==================================================================
1C    ------------ SINGLE PHASE SOURCE
1C    ------------ GROUNDED CIRCUIT, INTERNAL BUSES.
114A-0A      6.93E+3     60.0      0.0        0                    -1.0
1BLANK CARD TERMINATING SOURCE CARDS
```

```
LIST OF INPUT ELEMENTS CONNECTED TO EACH BUS.
        1) ONLY THE PHYSICAL CONNECTIONS OF MULTIPHASE LINES ARE SHOWN (CAPACITIVE AND INDUCTIVE COUPLING IGNORED)
        2) REPEATED ENTRIES IMPLY PARALLEL CONNECTIONS
        3) SOURCES ARE OMITTED, ALTHOUGH SWITCHES ARE INCLUDED;
        4) U.M. USAGE PRODUCES EXTRA, INTERNALLY-DEFINED NODES "UM????" (1ST 2 LETTERS "UM").
FROM BUS NAME 1 NAMES OF ALL ADJACENT BUSSES
-------------+-------------------------------------------------------------------------------------------
        A-0A  1A-1A  *
        A-1A  1A-0A  *A-2A  *
        A-3A  1TERRA *A-4A  *A-9A  *
        A-4A  1TERRA *A-3A  *A-5A  *
        A-5A  1TERRA *A-4A  *A-7A  *A-8A  *
        A-7A  1TERRA *A-5A  *
        A-8A  1TERRA *A-5A  *
        A-9A  1TERRA *A-3A  *
        A-2A  1A-1A  *G-1A  *
        G-1A  1TERRA *TERRA *TERRA *A-2A  *
        TERRA 1A-3A  *A-4A  *A-5A  *A-7A  *A-8A  *A-9A  *G-1A  *G-1A  *G-1A  *
-------------+-------------------------------------------------------------------------------------------

PI-EQUIV BRANCHES OF DISTRIB LINES IN TR, TX, ETC.  BETWEEN LIMITS     17    16
```

SINUSOIDAL STEADY STATE SOLUTION, BRANCH BY BRANCH. ALL FLOWS ARE AWAY FROM BUS, AND REAL PART, MAGNITUDE, OR P IS PRINTED ABOVE THE IMAGINARY PART, THE ANGLE, OR Q. FIRST SOLUTION FREQUENCY = 0.600000000E+02 HERTZ.

BUS K	BUS M	NODE VOLTAGE RECTANGULAR	NODE VOLTAGE POLAR	BRANCH CURRENT RECTANGULAR	BRANCH CURRENT POLAR	POWER FLOW P AND Q	POWER LOSS P AND Q
A-0A		0.6930000E+04	0.6930000E+04	0.9423732E+02	0.1208118E+03	0.3265323E+06	0.0000000E+00
		0.0000000E+00	0.0000	-0.7559640E+02	-38.7363	0.2619415E+06	0.1532617E+02
	A-1A	0.6929841E+04	0.6929841E+04	-0.9423732E+02	0.1208118E+03	-0.3265323E+06	
		-0.1978984E+00	-0.0016	0.7559640E+02	141.2637	-0.2619262E+06	
A-3A		0.2326400E+04	0.2353956E+04	0.2333305E+03	0.3338377E+03	0.3142822E+06	0.3142822E+06
		-0.3591299E+03	-8.7756	-0.2387561E+03	-45.6585	0.2358231E+06	0.2358231E+06
	TERRA	0.0000000E+00	0.0000000E+00	-0.2333305E+03	0.3338377E+03	0.0000000E+00	
		0.0000000E+00	0.0000	0.2387561E+03	134.3415	0.0000000E+00	
A-3A		0.2326400E+04	0.2353956E+04	0.5249023E+01	0.3429386E+02	0.2024957E+02	0.5879517E+00
		-0.3591299E+03	-8.7756	0.3388977E+02	81.1957	-0.4036312E+05	0.0000000E+00
	A-4A	0.2326395E+04	0.2353956E+04	-0.5249023E+01	0.3429386E+02	-0.1966162E+02	
		-0.3591637E+03	-8.7764	-0.3388977E+02	-98.8043	0.4036312E+05	
A-5A		0.2337119E+04	0.2365390E+04	0.3051758E-01	0.3075507E-01	0.3635705E+02	0.4768372E-06
		-0.3646154E+03	-8.8673	-0.3814697E-02	-7.1250	-0.1105890E+01	0.0000000E+00
	A-7A	0.2337119E+04	0.2365389E+04	-0.3051758E-01	0.3075507E-01	-0.3635705E+02	
		-0.3646154E+03	-8.8673	0.3814697E-02	172.8750	0.1105890E+01	
A-8A		0.0000000E+00	0.0000000E+00	0.0000000E+00	0.0000000E+00	0.0000000E+00	0.0000000E+00
		0.0000000E+00	0.0000	0.0000000E+00	0.0000	0.0000000E+00	0.0000000E+00
	TERRA	0.0000000E+00	0.0000000E+00	0.0000000E+00	0.0000000E+00	0.0000000E+00	
		0.0000000E+00	0.0000	0.0000000E+00	0.0000	0.0000000E+00	
A-9A		0.2326638E+04	0.2354223E+04	0.2386169E+03	0.3145006E+03	0.3143965E+06	0.4945703E+02
		-0.3593347E+03	-8.7796	-0.2048721E+03	-40.6488	0.1954600E+06	0.0000000E+00
	A-3A	0.2326400E+04	0.2353956E+04	-0.2386169E+03	0.3145006E+03	-0.3143471E+06	
		-0.3591299E+03	-8.7756	0.2048721E+03	139.3512	-0.1954600E+06	
A-1A		0.6929841E+04	0.6929841E+04	0.9423732E+02	0.1208127E+03	0.3265323E+06	0.3896215E+04
		-0.1978984E+00	-0.0016	-0.7559790E+02	-38.7369	0.2619314E+06	0.6283446E+05
	A-2A	0.6111147E+04	0.6176562E+04	-0.9400681E+02	0.1227616E+03	-0.3226361E+06	
		-0.8965504E+03	-8.3462	0.7895010E+02	139.9753	-0.1990969E+06	

A-4A		0.2326395E+04	0.2353956E+04	0.5207543E+01	0.3413020E+02	0.0000000E+00	0.0000000E+00
		-0.3591637E+03	-8.7764	0.3373058E+02	81.2236	-0.4017050E+05	-0.4017050E+05
	TERRA	0.0000000E+00	0.0000000E+00	-0.5207543E+01	0.3413020E+02	0.0000000E+00	
		0.0000000E+00	0.0000	-0.3373058E+02	-98.7764	0.0000000E+00	
A-4A		0.2326395E+04	0.2353956E+04	0.7905551E-01	0.1744505E+00	0.6403046E+02	0.0000000E+00
		-0.3591637E+03	-8.7764	0.1555095E+00	63.0528	-0.1950852E+03	0.1049330E+01
	A-5A	0.2337119E+04	0.2365390E+04	-0.7905551E-01	0.1744505E+00	-0.6403046E+02	
		-0.3646154E+03	-8.8673	-0.1555095E+00	-116.9472	0.1961345E+03	
A-5A		0.2337119E+04	0.2365390E+04	0.5649604E-01	0.1687664E+00	0.3702672E+02	0.3702672E+02
		-0.3646154E+03	-8.8673	0.1590292E+00	70.4421	-0.1961347E+03	-0.1961347E+03
	TERRA	0.0000000E+00	0.0000000E+00	-0.5649604E-01	0.1687664E+00	0.0000000E+00	
		0.0000000E+00	0.0000	-0.1590292E+00	-109.5579	0.0000000E+00	
A-2A		0.6111147E+04	0.6176562E+04	0.9400680E+02	0.1227615E+03	0.3226360E+06	0.1808477E+03
		-0.8965504E+03	-8.3462	-0.7895000E+02	-40.0246	0.1990966E+06	0.1808443E+04
	G-1A	0.6089943E+04	0.6158628E+04	-0.9400680E+02	0.1227615E+03	-0.3224552E+06	
		-0.9172172E+03	-8.5650	0.7895000E+02	139.9754	-0.1972882E+06	
G-1A		0.6089943E+04	0.6158628E+04	0.2537476E+01	0.2566095E+01	0.7901811E+04	0.7901811E+04
		-0.9172172E+03	-8.5650	-0.3821738E+00	-8.5650	-0.1525879E-04	-0.1525879E-04
	TERRA	0.0000000E+00	0.0000000E+00	-0.2537476E+01	0.2566095E+01	0.0000000E+00	
		0.0000000E+00	0.0000	0.3821738E+00	171.4350	0.0000000E+00	
G-1A		0.6089943E+04	0.6158628E+04	-0.4054990E-02	0.2722711E-01	0.0000000E+00	0.0000000E+00
		-0.9172172E+03	-8.5650	-0.2692346E-01	-98.5650	0.8384082E+02	0.8384082E+02
	TERRA	0.0000000E+00	0.0000000E+00	0.4054990E-02	0.2722711E-01	0.0000000E+00	
		0.0000000E+00	0.0000	0.2692346E-01	81.4350	0.0000000E+00	
A-9A		0.2326638E+04	0.2354223E+04	-0.2386022E+03	0.3144862E+03	-0.3143785E+06	-0.3143785E+06
		-0.3593347E+03	-8.7796	0.2048672E+03	139.3302	-0.1954569E+06	-0.1954569E+06
	TERRA	0.0000000E+00	0.0000000E+00	0.2386022E+03	0.3144862E+03	0.0000000E+00	
		0.0000000E+00	0.0000	-0.2048672E+03	-40.6498	0.0000000E+00	

```
G-1A                    0.6089943E+04  0.6158628E+04     0.9147339E+02  0.1205655E+03     0.3145533E+06  0.3145533E+06
                       -0.9172172E+03        -8.5650    -0.7854077E+02       -40.6500     0.1972039E+06  0.1972039E+06

            TERRA       0.0000000E+00  0.0000000E+00    -0.9147339E+02  0.1205655E+03     0.0000000E+00
                        0.0000000E+00         0.0000     0.7854077E+02       139.3500     0.0000000E+00


      TOTAL NETWORK LOSS "PLOSS" BY SUMMING NODAL INJECTIONS =    0.3266267266E+06
OUTPUT FOR STEADY STATE SWITCH CURRENT
     NODE-K    NODE-M          I-REAL          I-IMAG          I-MAGN        DEGREES        POWER          REACTIVE
    A-5A      A-8A              OPEN            OPEN            OPEN          OPEN           OPEN           OPEN
              A-7A              OPEN            OPEN            OPEN          OPEN           OPEN           OPEN

SOLUTION AT NODES WITH KNOWN VOLTAGE.     NODES SHORTED TOGETHER BY SWITCHES ARE SHOWN AS A GROUP OF NAMES, WITH
THE PRINTED RESULT APPLYING TO THE COMPOSITE GROUP.   THE ENTRY 'MVA' IS  SQRT(P**2 + Q**2)  IN UNITS OF POWER,
WHILE  'P.F.'  IS THE ASSOCIATED POWER FACTOR.
              NODE                SOURCE NODE VOLTAGE          INJECTED SOURCE CURRENT              INJECTED SOURCE POWER
              NAME        RECTANGULAR          POLAR       RECTANGULAR          POLAR              P AND Q   MVA AND P.F.

             A-0A         0.6930000E+04  0.6930000E+04     0.9423732E+02  0.1208101E+03     0.3265323E+06  0.4186071E+06
                          0.0000000E+00         0.0000    -0.7559375E+02       -38.7353     0.2619323E+06  0.7800449E+00

TACS DC STEADY-STATE SOLUTION FOLLOWS ...
  -NAME-          VALUE   -NAME-          VALUE   -NAME-          VALUE   -NAME-          VALUE   -NAME-          VALUE
          0.0000000E+00   TIMEX   0.0000000E+00   ISTEP   0.0000000E+00   DELTAT  0.1852000E-03   FREQHZ  0.6000000E+02
  OMEGAR  0.3769911E+03   ZERO    0.0000000E+00   PLUS1   0.1000000E+01   MINUS1 -0.1000000E+01   UNITY   0.1000000E+01
  INFNTY  0.1000000E+21   PI      0.3141593E+01   GATE1   0.0000000E+00   GATE2   0.0000000E+00
```

```
+COMMENT CARD.                                  1C
                                                1C    ==================================================================
+COMMENT CARD.
                                                1C    ------------ REQUEST NODE VOLTAGES
+COMMENT CARD.
                                                1  A-9A
+CARD OF BUS NAMES FOR NODE-VOLTAGE OUTPUT.
                                                 1BLANK CARD ENDING NODE VOLTAGE REQUEST CARD
+BLANK CARD ENDING NODE NAMES FOR VOLTAGE OUTPUT.
```

```
COLUMN HEADINGS FOR THE  23  EMTP OUTPUT VARIABLES FOLLOW.   THESE ARE ORDERED ACCORDING TO THE FIVE
POSSIBLE EMTP OUTPUT-VARIABLE CLASSES, AS FOLLOWS ....
  FIRST   1  OUTPUT VARIABLES ARE ELECTRIC-NETWORK NODE VOLTAGES (WITH RESPECT TO LOCAL GROUND)!
   NEXT   7  OUTPUT VARIABLES ARE BRANCH VOLTAGES (VOLTAGE OF UPPER NODE MINUS VOLTAGE OF LOWER NODE)!
   NEXT  13  OUTPUT VARIABLES ARE BRANCH CURRENTS (FLOWING FROM THE UPPER EMTP NODE TO THE LOWER)!
   NEXT   0  OUTPUT VARIABLES PERTAIN TO DYNAMIC SYNCHRONOUS MACHINES, WITH NAMES GENERATED INTERNALLY!
   NEXT   2  OUTPUT VARIABLES BELONG TO  'TACS'  (NOTE INTERNALLY-ADDED UPPER NAME OF PAIR).
  FINAL   0  OUTPUT VARIABLES BELONG TO UNIVARSAL MACHINES (UM), WITH NAMES GENERATED INTERNALLY!
BRANCH POWER  CONSUMPTION (POWER  FLOW, IF A SWITCH) IS TREATED LIKE A BRANCH VOLTAGE FOR THIS GROUPING!
BRANCH ENERGY CONSUMPTION (ENERGY FLOW, IF A SWITCH) IS TREATED LIKE A BRANCH CURRENT FOR THIS GROUPING.

 STEP      TIME        A-9A         A-0A         A-3A         A-4A         A-4A         G-1A         A-5A         TERRA
                                    A-1A         TERRA        TERRA        A-5A         TERRA        A-8A         A-7A

                       A-5A         TERRA        A-0A         A-3A         A-3A         A-5A         A-8A         A-9A
                       A-8A         A-7A         A-1A         TERRA        A-4A         A-7A         TERRA        A-3A

                       A-4A         A-4A         A-5A         A-2A         G-1A         TACS         TACS
                       TERRA        A-5A         TERRA        G-1A         TERRA        GATE1        GATE2
    0 0.000000 0.232664E+04 0.158752E+00 0.232640E+04 0.232639E+04-0.107239E+02 0.608994E+04 0.233712E+04-0.233712E+04
               0.000000E+00 0.000000E+00 0.942373E+02 0.233330E+03 0.524902E+01 0.305176E-01 0.000000E+00 0.238617E+03
               0.520754E+01 0.790555E-01 0.564960E-01 0.940068E+02-0.405499E-02 0.000000E+00 0.000000E+00
          VALVE  'A-5A   ' TO 'A-8A   '  CLOSING AFTER 0.74080E-03 SEC.
   20 0.003704 0.737737E+03-0.157303E+00 0.737473E+03 0.737482E+03 0.737455E+03 0.190957E+04 0.000000E+00-0.263932E-01
               0.263932E+02 0.000000E+00 0.985812E+02 0.272233E+03-0.845337E+01 0.232598E-06 0.263932E+02 0.263786E+03
              -0.348375E+02 0.263905E+02-0.275584E-02 0.101952E+03 0.254367E-01 0.000000E+00 0.000000E+00
   40 0.007408-0.201434E+04-0.243591E+00-0.201420E+04-0.201420E+04-0.201421E+04-0.528366E+04 0.000000E+00-0.105950E-01
               0.105950E+02 0.000000E+00-0.571407E+02-0.136058E+03-0.392151E+01 0.116182E-06 0.105950E+02-0.139999E+03
              -0.145263E+02 0.105950E+02-0.341499E-05-0.558642E+02 0.127171E-01 0.000000E+00 0.000000E+00
          VALVE  'A-5A   ' TO 'A-8A   '  OPENING AFTER 0.83340E-02 SEC.
          VALVE  '       ' TO 'A-7A   '  CLOSING AFTER 0.90748E-02 SEC.
   60 0.011112-0.145881E+04 0.847168E-01-0.145849E+04-0.145849E+04-0.145847E+04-0.379951E+04-0.208425E-01 0.000000E+00
               0.000000E+00 0.208425E+02-0.120618E+03-0.316289E+03-0.640869E+00-0.208425E+02-0.222045E-15-0.316940E+03
               0.201837E+02-0.208271E+02 0.153928E-01-0.123112E+03-0.209616E-01 0.000000E+00 0.000000E+00
   80 0.014816 0.156558E+04 0.242004E+00 0.156555E+04 0.156554E+04 0.156556E+04 0.411192E+04-0.198922E-01 0.000000E+00
               0.000000E+00 0.198922E+02 0.165681E+02 0.254271E+02 0.711060E+01-0.198922E+02-0.222045E-15 0.325775E+02
               0.270174E+02-0.198922E+02 0.989348E-05 0.141786E+02-0.200886E-01 0.000000E+00 0.000000E+00
```

PRINTOUT OF THE SAVING OF TERMINAL CONDITIONS FOR ALL COMPONENTS, AT TIME 0.6000480E-01 SECONDS.
BEGIN WITH ALL NODE VOLTAGES.

NODE NUMBER			NODE NAME	NODE VOLTAGE
A-8A	0.33528E-10	0.00000E+00		2
A-7A	0.00000E+00	0.00000E+00		3
A-5A	-0.10422E-01	0.00000E+00		4
A-4A	-0.20065E+04	0.00000E+00		5
A-3A	-0.20065E+04	0.00000E+00		6
A-9A	-0.20068E+04	0.00000E+00		7
G-1A	-0.52448E+04	0.00000E+00		8
A-2A	-0.52546E+04	0.00000E+00		9
A-1A	-0.55990E+04	0.00000E+00		10
A-0A	-0.55991E+04	0.00000E+00		11

LINEAR BRANCH TABLE STATE VARIABLES ('CURRENTS') FOLLOW.

ROW I	'FROM' NODE BUS(KBUS(I))		'TO' NODE BUS(MBUS(I))		LINEAR BRANCH PARAMETERS, IDENTIFIED BY THE FORTRAN VECTOR STORAGE CIK(I)	CI(I)	CK(I)
A-0A	A-1A	-0.12079E+03	0.00000E+00	0.00000E+00	0.00000E+00	1	
A-3A		-0.32651E+03	0.00000E+00	0.00000E+00	0.00000E+00	2	
A-3A	A-4A	0.11765E+02	0.00000E+00	0.00000E+00	0.00000E+00	3	
A-5A	A-7A	-0.10422E+02	0.00000E+00	0.00000E+00	0.00000E+00	4	
A-9A	A-3A	-0.31477E+03	0.00000E+00	0.00000E+00	0.00000E+00	6	
A-1A	A-2A	-0.12184E+03	0.10503E+01	0.10342E+01	0.00000E+00	7	
A-4A		0.22033E+02	-0.20065E+04	0.00000E+00	0.00000E+00	8	
A-4A	A-5A	-0.10276E+02	0.00000E+00	0.00000E+00	0.00000E+00	9	
A-5A		0.14585E+00	-0.37922E+03	0.00000E+00	0.00000E+00	10	
A-2A	G-1A	-0.12287E+03	0.00000E+00	0.00000E+00	0.00000E+00	11	
G-1A		-0.21853E+01	0.00000E+00	0.00000E+00	0.00000E+00	12	
G-1A		-0.12621E-01	0.00000E+00	0.00000E+00	0.00000E+00	13	
A-9A		0.31478E+03	0.00000E+00	0.00000E+00	0.00000E+00	14	
G-1A		-0.12068E+03	0.00000E+00	0.00000E+00	0.00000E+00	15	

STATUS VARIABLES FOR SWITCHES FOLLOW.

BUS(L)	BUS(M)	KPOS(K)	KODE(L)	KODE(M)	TCLOSE	ADELAY	ENERGY	CRIT
A-5A	A-8A	-5	0	0	-0.2871674895E+00	0.0000000000E+00	0.0000000000E+00	0.4379057701E-46
		0						
	A-7A	-2	3	1	0.1042230427E+02	0.0000000000E+00	0.0000000000E+00	0.0000000000E+00
		-2						

```
+COMMENT CARD.
                                                        1C    ------------ FOURIER ANALYSIS OF THE SVC CURRENTS OF THE SYSTEM
+COMMENT CARD.
                                                        1  FOURIER ON
+FOURIER SERIES STARTED.  NFOUR =      30
                                                        1 193                      A-3A  A-4A
+** PLOT CARD.     0.000E+00  0.000E+00  0.000E+00
                                                        1              1.0       0.03            0.046761
+RE-READ OF FLOATING-POINT FIELDS FOR ACCURACY.

 BEGIN FOURIER SERIES CALCULATION USING    91   EQUIDISTANT POINTS.   BEGINNING TWO POINTS =
   -0.2288818713E+00    0.1594543472E+01         ENDING TWO POINTS =   -0.6008147821E+00    0.2288814611E-01

 COEFFICIENTS OF RESULTANT FOURIER SERIES, WITH  "COMPLEX AMPLITUDE"  BEING THE SQUARE ROOT
 OF THE SUM OF THE SQUARES OF THE TWO PRECEDING ENTRIES.   THE FINAL COLUMN APPLIES TO THIS AMPLITUDE.
```

HARMONIC NUMBER	COSINE COEFFICIENT	SINE COEFFICIENT	COMPLEX AMPLITUDE	FRACTION OF FUNDAMENTAL
0	-0.3300928831E-02	0.0000000000E+00	0.3300928831E-02	0.00049124
1	0.6609144270E+01	-0.1213015467E+01	0.6719538271E+01	1.00000000
2	-0.2477655783E+00	0.5873239646E-01	0.2546316460E+00	0.03789422
3	-0.2360643744E+01	0.1296266928E+01	0.2693129569E+01	0.40079087
4	-0.4759688955E-01	-0.2993978723E-01	0.5623037228E-01	0.00836819
5	0.1222452611E+01	-0.1464246586E+01	0.1907461256E+01	0.28386791
6	-0.5086972639E+00	0.3784840405E+00	0.6340528950E+00	0.09435959
7	-0.5424268484E+01	0.3860095054E+01	0.6657553792E+01	0.99077549
8	0.3830852248E+00	-0.3053837121E+00	0.4899117276E+00	0.07290854
9	0.3729231171E+00	0.6038723141E+00	0.7097418010E+00	0.10562360
10	0.5500604305E-01	-0.2250852045E+00	0.2317088991E+00	0.03448286
11	-0.5985760735E-01	-0.3000822440E+00	0.3059939332E+00	0.04553794
12	0.5081724422E-01	-0.7358457521E-01	0.8942640573E-01	0.01330842
13	0.7703509554E-01	-0.3475424368E-01	0.8451191243E-01	0.01257704
14	0.7006939966E-02	-0.7031195238E-01	0.7066022884E-01	0.01051564
15	-0.1224578312E-01	-0.6235811347E-01	0.6354914326E-01	0.00945737
16	0.7200650463E-02	-0.4894009419E-01	0.4946698109E-01	0.00736166
17	0.6692329946E-02	-0.4593400192E-01	0.4641895974E-01	0.00690806
18	-0.2923160326E-02	-0.4241149919E-01	0.4251211742E-01	0.00632664
19	-0.4871046636E-02	-0.3839294286E-01	0.3870071284E-01	0.00575943
20	-0.5723111273E-02	-0.3453998873E-01	0.3501092410E-01	0.00521032
21	-0.6852219230E-02	-0.3188148793E-01	0.3260954143E-01	0.00485294
22	-0.6588696386E-02	-0.2891539200E-01	0.2965654759E-01	0.00441348
23	-0.1077080227E-01	-0.2707934054E-01	0.2914276696E-01	0.00433702
24	-0.1194500190E-01	-0.2473487775E-01	0.2746811323E-01	0.00408780
25	-0.8953015669E-02	-0.2220767760E-01	0.2394446568E-01	0.00356341
26	-0.1082548336E-01	-0.2238353784E-01	0.2486390667E-01	0.00370024
27	-0.1302954089E-01	-0.1985382778E-01	0.2374749258E-01	0.00353410
28	-0.1369398739E-01	-0.1953241159E-01	0.2385456744E-01	0.00355003
29	-0.1309638564E-01	-0.1972080930E-01	0.2367331064E-01	0.00352306

```
                                                  1 193                    A-4A  A-5A
+** PLOT CARD.    0.000E+00  0.000E+00  0.000E+00
                                                  1              1.0      0.03            0.046761
+RE-READ OF FLOATING-POINT FIELDS FOR ACCURACY.

 BEGIN FOURIER SERIES CALCULATION USING     91   EQUIDISTANT POINTS.   BEGINNING TWO POINTS =
   -0.2764781237E+02   -0.2721381736E+02          ENDING TWO POINTS =   -0.2792370677E+02   -0.2762465835E+02

 COEFFICIENTS OF RESULTANT FOURIER SERIES, WITH  "COMPLEX AMPLITUDE"  BEING THE SQUARE ROOT
 OF THE SUM OF THE SQUARES OF THE TWO PRECEDING ENTRIES.   THE FINAL COLUMN APPLIES TO THIS AMPLITUDE.
```

HARMONIC NUMBER	COSINE COEFFICIENT	SINE COEFFICIENT	COMPLEX AMPLITUDE	FRACTION OF FUNDAMENTAL
0	-0.3064863607E+00	0.0000000000E+00	0.3064863607E+00	0.01137500
1	-0.2639235616E+02	0.5423520446E+01	0.2694384980E+02	1.00000000
2	0.1372705083E+00	-0.6749841757E-01	0.1529680640E+00	0.00567729
3	-0.1768032044E+01	0.1052390471E+01	0.2057538092E+01	0.07636392
4	0.1316806041E+00	-0.1137502948E+00	0.1740083657E+00	0.00645818
5	0.7850585803E+00	-0.9834800959E+00	0.1258391857E+01	0.04670423
6	-0.2514044801E-01	0.5886123283E-01	0.6400536560E-01	0.00237551
7	-0.1405904386E+00	0.6900384724E+00	0.7042149976E+00	0.02613639
8	0.1295637828E-01	-0.1080831895E+00	0.1088569863E+00	0.00404014
9	-0.2597213583E-01	-0.5875866562E+00	0.5881603807E+00	0.02182911
10	0.1897572959E-01	0.6874248944E-01	0.7131345011E-01	0.00264674
11	0.1551025938E+00	0.3472178839E+00	0.3802855164E+00	0.01411400
12	-0.3872834193E-01	-0.6797579303E-01	0.7823421806E-01	0.00290360
13	-0.1868137736E+00	-0.1990028694E+00	0.2729496807E+00	0.01013031
14	0.4245554237E-01	0.2140706987E-01	0.4754719464E-01	0.00176468
15	0.1557938028E+00	0.6111456640E-01	0.1673520226E+00	0.00621114
16	-0.4048652994E-01	-0.1653565862E-01	0.4373313533E-01	0.00162312
17	-0.1066663405E+00	-0.9309186833E-02	0.1070717946E+00	0.00397389
18	0.2191208233E-01	-0.1193197339E-01	0.2495017718E-01	0.00092601
19	0.4591329303E-01	-0.2916691126E-01	0.5439429404E-01	0.00201880
20	-0.1286807435E-01	0.2610584779E-02	0.1313021290E-01	0.00048732
21	-0.1126696519E-01	0.1226947294E-01	0.1665786514E-01	0.00061824
22	-0.5368479004E-02	-0.9381047799E-02	0.1080854400E-01	0.00040115
23	-0.1632434200E-01	-0.4035647318E-02	0.1681578392E-01	0.00062410
24	0.3444042843E-02	-0.9150775615E-02	0.9777429397E-02	0.00036288
25	0.1117849350E-01	-0.2459452348E-01	0.2701572329E-01	0.00100267
26	-0.9326515603E-02	0.9047408705E-02	0.1299382537E-01	0.00048226
27	-0.8918253938E-02	0.2835433884E-01	0.2972379164E-01	0.00110318
28	-0.4578951979E-02	-0.2125168568E-01	0.2173938695E-01	0.00080684
29	-0.1258204016E-01	-0.3650015639E-01	0.3860788979E-01	0.00143290

```
                                                    1 193                    A-4A
+** PLOT CARD.     0.000E+00  0.000E+00  0.000E+00
                                                    1              1.0       0.03              0.046761

+RE-READ OF FLOATING-POINT FIELDS FOR ACCURACY.

 BEGIN FOURIER SERIES CALCULATION USING     91   EQUIDISTANT POINTS.   BEGINNING TWO POINTS =
    0.2741733646E+02    0.2880843353E+02          ENDING TWO POINTS =    0.2732362652E+02    0.2764947701E+02

 COEFFICIENTS OF RESULTANT FOURIER SERIES. WITH  "COMPLEX AMPLITUDE"  BEING THE SQUARE ROOT
 OF THE SUM OF THE SQUARES OF THE TWO PRECEDING ENTRIES.   THE FINAL COLUMN APPLIES TO THIS AMPLITUDE.
  HARMONIC              COSINE                SINE              COMPLEX          FRACTION OF
    NUMBER          COEFFICIENT          COEFFICIENT           AMPLITUDE         FUNDAMENTAL
         0    0.3038947135E+00     0.0000000000E+00     0.3038947135E+00          0.00902746
         1    0.3300290585E+02    -0.6635576725E+01     0.3366337299E+02          1.00000000
         2   -0.3852570318E+00     0.1271705385E+00     0.4057034962E+00          0.01205178
         3   -0.5940699726E+00     0.2446656134E+00     0.6424798742E+00          0.01908543
         4   -0.1792630628E+00     0.8232292905E-01     0.1972620357E+00          0.00585984
         5    0.4376533143E+00    -0.4818592034E+00     0.6509444788E+00          0.01933688
         6   -0.4823841266E+00     0.3209477589E+00     0.5793978870E+00          0.01721152
         7   -0.5282085717E+01     0.3169432938E+01     0.6160010934E+01          0.18298852
         8    0.3682949580E+00    -0.1962851230E+00     0.4173356295E+00          0.01239732
         9    0.3988554217E+00     0.1193742588E+01     0.1258613124E+01          0.03738821
        10    0.3595221695E-01    -0.2948667780E+00     0.2970504649E+00          0.00882414
        11   -0.2166511472E+00    -0.6481417120E+00     0.6833925694E+00          0.02030078
        12    0.9006956685E-01    -0.4733549082E-02     0.9019386489E-01          0.00267929
        13    0.2653379031E+00     0.1653032191E+00     0.3126169480E+00          0.00928656
        14   -0.3695163131E-01    -0.9151560813E-01     0.9869412147E-01          0.00293180
        15   -0.1693404689E+00    -0.1241111662E+00     0.2099518422E+00          0.00623680
        16    0.4843792552E-01    -0.3438116517E-01     0.5939947115E-01          0.00176451
        17    0.1135783046E+00    -0.3799833404E-01     0.1197660416E+00          0.00355776
        18   -0.2437594184E-01    -0.2902288665E-01     0.3790137870E-01          0.00112589
        19   -0.5008742074E-01    -0.7806947571E-02     0.5069219042E-01          0.00150586
        20    0.6934045465E-02    -0.3725103009E-01     0.3789089900E-01          0.00112558
        21    0.3661994124E-02    -0.4377536988E-01     0.4392827349E-01          0.00130493
        22   -0.3167608287E-02    -0.2016277704E-01     0.2041007881E-01          0.00060630
        23    0.6172473659E-02    -0.2319505042E-01     0.2400228730E-01          0.00071301
        24   -0.1341709727E-01    -0.1624749671E-01     0.2107129921E-01          0.00062594
        25   -0.2119960892E-01    -0.4485752379E-04     0.2119965642E-01          0.00062975
        26   -0.2952848183E-02    -0.2981028543E-01     0.2995617501E-01          0.00088987
        27   -0.3988480836E-02    -0.4587002145E-01     0.4604309751E-01          0.00136775
        28   -0.8083710331E-02     0.8186109553E-03     0.8125053602E-02          0.00024136
        29   -0.1133861122E-02     0.1560254511E-01     0.1564369071E-01          0.00046471
```

DATA CASE E2.

OUTPUT OF THREEE PHASE, UNBALANCED LOAD SYSTEM

```
+COMMENT CARD.

+COMMENT CARD.

+FOURIER SERIES STARTED.  NFOUR =      30

+** PLOT CARD.     0.000E+00  0.000E+00  0.000E+00

+RE-READ OF FLOATING-POINT FIELDS FOR ACCURACY.
```

```
1C    ------------ FOURIER ANALYSIS OF THE SVC CURRENTS OF THE SYSTEM

1  FOURIER ON

1 193                        A-3A  A-4A

1                1.0       0.034370         0.051223
```

BEGIN FOURIER SERIES CALCULATION USING 91 EQUIDISTANT POINTS. BEGINNING TWO POINTS =
-0.9857177615E+01 -0.1205444336E+02 ENDING TWO POINTS = -0.1004028320E+02 -0.9796142459E+01

COEFFICIENTS OF RESULTANT FOURIER SERIES, WITH "COMPLEX AMPLITUDE" BEING THE SQUARE ROOT OF THE SUM OF THE SQUARES OF THE TWO PRECEDING ENTRIES. THE FINAL COLUMN APPLIES TO THIS AMPLITUDE.

HARMONIC NUMBER	COSINE COEFFICIENT	SINE COEFFICIENT	COMPLEX AMPLITUDE	FRACTION OF FUNDAMENTAL
0	-0.1276573781E+00	0.0000000000E+00	0.1276573781E+00	0.00356886
1	-0.3392259264E+02	-0.1134619570E+02	0.3576979828E+02	1.00000000
2	0.9266258925E+00	0.3132000975E+00	0.9781256765E+00	0.02734502
3	0.6797683895E+01	0.8525002837E+01	0.1090340221E+02	0.30482146
4	0.7580656111E+00	-0.6261660904E+00	0.9832331538E+00	0.02748780
5	0.1472534990E+02	-0.6598381341E+01	0.1613612604E+02	0.45111034
6	-0.5345242620E+00	0.4375564307E-01	0.5363121703E+00	0.01499344
7	0.1543911904E+01	-0.2834315479E+01	0.3227539033E+01	0.09023084
8	-0.2125771102E+00	0.3121803664E+00	0.3776845373E+00	0.01055876
9	0.9945634007E+00	-0.2796132676E+00	0.1033121452E+01	0.02888251
10	-0.2470876202E+00	0.2044573035E+00	0.3207102753E+00	0.00896595
11	-0.8195574768E-01	0.8655448258E-01	0.1191990897E+00	0.00333239
12	-0.1258031502E+00	0.1543621290E+00	0.1991333701E+00	0.00556708
13	-0.7993850764E-01	0.1922151446E+00	0.2081749905E+00	0.00581985
14	-0.1016902039E+00	0.1541510187E+00	0.1846711505E+00	0.00516277
15	-0.3135838136E+00	0.6001814231E+00	0.6771650836E+00	0.01893120
16	0.1569488295E-01	-0.3029610217E-01	0.3412012849E-01	0.00095388
17	-0.4052300006E-01	0.6320050731E-01	0.7507607900E-01	0.00209887
18	0.2318810369E-01	0.1715125982E-01	0.2884187689E-01	0.00080632
19	0.4609362641E-01	0.2398919477E-01	0.5196252372E-01	0.00145269
20	0.4121566098E-01	0.5413401499E-01	0.6803838909E-01	0.00190212
21	0.2944346257E+00	0.1749237347E+00	0.3424763680E+00	0.00957446
22	-0.1010106718E+00	-0.2079716162E-01	0.1031294223E+00	0.00288314
23	-0.3208502056E-01	0.9210537886E-02	0.3338087117E-01	0.00093321
24	-0.4994661221E-01	0.8325266070E-02	0.5063570011E-01	0.00141560
25	-0.4601358343E-01	0.2037124592E-01	0.5032134242E-01	0.00140681
26	-0.4560235050E-01	-0.1218710851E-02	0.4561863234E-01	0.00127534
27	-0.1533830669E+00	-0.4799278500E-01	0.1607161239E+00	0.00449307
28	0.4782141699E-01	0.4149867408E-01	0.6331688445E-01	0.00177012
29	0.9341756115E-02	0.2371972823E-01	0.2549301716E-01	0.00071270

```
                                                  1 193                        A-3B  A-4B
+** PLOT CARD.     0.000E+00  0.000E+00  0.000E+00
                                                  1              1.0       0.04              0.056761
+RE-READ OF FLOATING-POINT FIELDS FOR ACCURACY.

 BEGIN FOURIER SERIES CALCULATION USING     91   EQUIDISTANT POINTS.   BEGINNING TWO POINTS =
    0.1425170875E+02    0.1373291028E+02          ENDING TWO POINTS =    0.9246826291E+01    0.1464843726E+02
```

COEFFICIENTS OF RESULTANT FOURIER SERIES, WITH "COMPLEX AMPLITUDE" BEING THE SQUARE ROOT OF THE SUM OF THE SQUARES OF THE TWO PRECEDING ENTRIES. THE FINAL COLUMN APPLIES TO THIS AMPLITUDE.

HARMONIC NUMBER	COSINE COEFFICIENT	SINE COEFFICIENT	COMPLEX AMPLITUDE	FRACTION OF FUNDAMENTAL
0	0.1552023422E+00	0.0000000000E+00	0.1552023422E+00	0.00358741
1	-0.4099008703E+02	-0.1383850288E+02	0.4326304913E+02	1.00000000
2	0.1879637480E+01	0.4888372645E+00	0.1942163467E+01	0.04489197
3	0.9675028801E+01	0.1173563027E+02	0.1520957589E+02	0.35156043
4	0.2628223270E+01	-0.5327304900E+00	0.2681670994E+01	0.06198525
5	0.4694433165E+02	-0.3605279326E+01	0.4708256912E+02	1.08828597
6	-0.2441538781E+01	-0.1999403946E+00	0.2449711770E+01	0.05662365
7	0.1091966322E+00	-0.2984013319E+01	0.2986010611E+01	0.06901988
8	-0.6979427487E+00	0.2130591646E+00	0.7297385111E+00	0.01686748
9	0.5912741199E+00	-0.3313097134E+00	0.6777692884E+00	0.01566624
10	-0.5120063275E+00	0.1410088670E+00	0.5310687125E+00	0.01227534
11	-0.2754037566E+00	0.7289290428E-01	0.2848870046E+00	0.00658500
12	-0.3073763214E+00	0.8997217845E-01	0.3202736266E+00	0.00740294
13	-0.2679310888E+00	0.1279748119E+00	0.2969252802E+00	0.00686325
14	-0.2337751929E+00	0.1047214400E+00	0.2561589740E+00	0.00592096
15	-0.4264650531E+00	0.5388861150E+00	0.6872195303E+00	0.01588468
16	-0.9146505408E-01	-0.6668942049E-01	0.1131960023E+00	0.00261646
17	-0.1337103620E+00	-0.1085387368E-01	0.1341501679E+00	0.00310080
18	-0.7364023663E-01	0.3782606509E-02	0.7373732142E-01	0.00170439
19	-0.4092398332E-01	0.1527657127E-01	0.4368233122E-01	0.00100969
20	-0.3668494290E-01	0.3135470161E-01	0.4825870227E-01	0.00111547
21	0.2132796329E+00	0.1504327245E+00	0.2609946504E+00	0.00603274
22	-0.1739704646E+00	-0.4509911453E-01	0.1797210407E+00	0.00415415
23	-0.1250941493E+00	-0.8401601925E-02	0.1253759656E+00	0.00289799
24	-0.9881326184E-01	-0.1818949124E-01	0.1004734710E+00	0.00232239
25	-0.8800349664E-01	-0.1317600580E-01	0.8898439538E-01	0.00205682
26	-0.1069467571E+00	-0.1280195825E-01	0.1077102553E+00	0.00248966
27	-0.2069295403E+00	-0.6112000253E-01	0.2157672103E+00	0.00498733
28	0.3147453369E-02	0.3314588638E-01	0.3329498833E-01	0.00076959
29	-0.2526999847E-01	0.2078768844E-01	0.3272156511E-01	0.00075634

```
                                                    1 193                          A-3C  A-4C
+** PLOT CARD.     0.000E+00  0.000E+00  0.000E+00
                                                    1                 1.0       0.037014        0.053868
+RE-READ OF FLOATING-POINT FIELDS FOR ACCURACY.
```

BEGIN FOURIER SERIES CALCULATION USING 91 EQUIDISTANT POINTS. BEGINNING TWO POINTS =
-0.1040649378E+02 -0.6072998345E+01 ENDING TWO POINTS = -0.9918213129E+01 -0.1046752894E+02

COEFFICIENTS OF RESULTANT FOURIER SERIES, WITH "COMPLEX AMPLITUDE" BEING THE SQUARE ROOT OF THE SUM OF THE SQUARES OF THE TWO PRECEDING ENTRIES. THE FINAL COLUMN APPLIES TO THIS AMPLITUDE.

HARMONIC NUMBER	COSINE COEFFICIENT	SINE COEFFICIENT	COMPLEX AMPLITUDE	FRACTION OF FUNDAMENTAL
0	-0.1205249829E+00	0.0000000000E+00	0.1205249829E+00	0.00337058
1	0.3295210314E+02	0.1388480115E+02	0.3575791931E+02	1.00000000
2	-0.1453197345E+01	-0.3298640102E+00	0.1490165353E+01	0.04167372
3	-0.5672865987E+01	-0.9689592957E+01	0.1122807288E+02	0.31400241
4	-0.2151309431E+01	0.9541811273E+00	0.2353421748E+01	0.06581540
5	-0.3577206421E+02	0.1354254258E+02	0.3824971962E+02	1.06968527
6	0.1684679642E+01	-0.5896671787E+00	0.1784895763E+01	0.04991610
7	-0.1448646545E+01	0.2060133040E+01	0.2518476725E+01	0.07043130
8	0.5670415908E+00	-0.4940493628E+00	0.7520777434E+00	0.02103248
9	-0.8163014948E+00	-0.5938020051E+00	0.1009430021E+01	0.02822955
10	0.4372816943E+00	-0.2032788955E+00	0.4822215140E+00	0.01348573
11	0.2612803429E+00	-0.2119491380E+00	0.3364369981E+00	0.00940874
12	0.2492714785E+00	-0.1508271210E+00	0.2913504615E+00	0.00814786
13	0.2798438035E+00	-0.1774416789E+00	0.3313579708E+00	0.00926670
14	0.1966296639E+00	-0.1180002131E+00	0.2293191552E+00	0.00641310
15	0.6751070917E+00	-0.1422861312E+00	0.6899383515E+00	0.01929470
16	-0.3688738635E-01	-0.9834240843E-01	0.1050328929E+00	0.00293733
17	0.3918254795E-01	-0.1010370329E+00	0.1083686035E+00	0.00303062
18	0.1179694606E-01	-0.9268384799E-01	0.9343159851E-01	0.00261289
19	0.5948459730E-02	-0.1298998706E+00	0.1300359983E+00	0.00363657
20	0.3399605537E-01	-0.1106452988E+00	0.1157502225E+00	0.00323705
21	0.1190889310E+00	-0.3623831533E+00	0.3814495020E+00	0.01066755
22	-0.4086334910E-01	0.5470594391E-01	0.6828289386E-01	0.00190959
23	-0.3218359221E-01	0.2887946786E-02	0.3231290542E-01	0.00090366
24	-0.1167254662E-01	-0.3020498407E-02	0.1205702103E-01	0.00033718
25	-0.2563780220E-01	0.7873717812E-02	0.2681962587E-01	0.00075003
26	-0.2521966584E-01	0.4173798952E-02	0.2556271013E-01	0.00071488
27	-0.1023743721E+00	0.9513222706E-01	0.1397521123E+00	0.00390828
28	0.4282764299E-01	-0.6444295309E-01	0.7737636101E-01	0.00216389
29	0.1678171265E-01	-0.2363818814E-01	0.2898947778E-01	0.00081071

```
                                                  1 183                    A-9A  A-9B
+** PLOT CARD.     0.000E+00  0.000E+00  0.000E+00
                                                  1              1.0       0.027179        0.044033
+RE-READ OF FLOATING-POINT FIELDS FOR ACCURACY.
```

BEGIN FOURIER SERIES CALCULATION USING 91 EQUIDISTANT POINTS. BEGINNING TWO POINTS =
0.4091893463E+03 0.9630438232E+03 ENDING TWO POINTS = -0.1297127228E+03 0.4075577087E+03

COEFFICIENTS OF RESULTANT FOURIER SERIES, WITH "COMPLEX AMPLITUDE" BEING THE SQUARE ROOT OF THE SUM OF THE SQUARES OF THE TWO PRECEDING ENTRIES. THE FINAL COLUMN APPLIES TO THIS AMPLITUDE.

HARMONIC NUMBER	COSINE COEFFICIENT	SINE COEFFICIENT	COMPLEX AMPLITUDE	FRACTION OF FUNDAMENTAL
0	0.5026098907E+01	0.0000000000E+00	0.5026098907E+01	0.00072454
1	0.8004986267E+03	0.6890597168E+04	0.6936939331E+04	1.00000000
2	-0.1435619855E+02	-0.1023348293E+03	0.1033369131E+03	0.01489661
3	-0.1166846240E+02	-0.4615232038E+02	0.4760451365E+02	0.00686247
4	-0.1308098900E+02	-0.3543217373E+02	0.3776971292E+02	0.00544472
5	-0.1729623337E+03	0.8835944843E+02	0.1942250271E+03	0.02799866
6	0.3613281250E+01	-0.2861802459E+02	0.2884522724E+02	0.00415821
7	0.3954357147E+02	0.1785025430E+02	0.4338577652E+02	0.00625431
8	-0.7655128598E+01	-0.2534046769E+02	0.2647149968E+02	0.00381602
9	-0.5837222636E+01	-0.2036864471E+02	0.2118855476E+02	0.00305445
10	-0.5877851903E+01	-0.1789427185E+02	0.1883491731E+02	0.00271516
11	-0.3458672017E+01	-0.1645924950E+02	0.1681871891E+02	0.00242452
12	-0.6227992654E+01	-0.1389169681E+02	0.1522390008E+02	0.00219461
13	-0.5038418651E+01	-0.1125924110E+02	0.1233516002E+02	0.00177818
14	-0.6199575484E+01	-0.1194479990E+02	0.1345782232E+02	0.00194002
15	-0.5794442356E+01	-0.1081376994E+02	0.1226838136E+02	0.00176856
16	-0.5935885847E+01	-0.9926979780E+01	0.1156631613E+02	0.00166735
17	-0.4122579694E+01	-0.8813549638E+01	0.9730072975E+01	0.00140265
18	-0.6865887523E+01	-0.8606357694E+01	0.1100953245E+02	0.00158709
19	-0.7779452622E+01	-0.7798182547E+01	0.1101505947E+02	0.00158788
20	-0.5853313744E+01	-0.7421680987E+01	0.9452123165E+01	0.00136258
21	-0.6070311785E+01	-0.6815468371E+01	0.9126844764E+01	0.00131569
22	-0.6071258068E+01	-0.6397524714E+01	0.8819778681E+01	0.00127142
23	-0.6275544941E+01	-0.5648958385E+01	0.8443529844E+01	0.00121718
24	-0.5990273297E+01	-0.5766880274E+01	0.8315063596E+01	0.00119866
25	-0.6140848517E+01	-0.5447782099E+01	0.8209040761E+01	0.00118338
26	-0.5985487640E+01	-0.4822595358E+01	0.7686578453E+01	0.00110806
27	-0.6053552985E+01	-0.4508508265E+01	0.7547989845E+01	0.00108809
28	-0.6031432450E+01	-0.4194670677E+01	0.7346661747E+01	0.00105906
29	-0.6216636837E+01	-0.3835960269E+01	0.7304872632E+01	0.00105304

```
                                                  1 183                    A-9B  A-9C
+** PLOT CARD.     0.000E+00  0.000E+00  0.000E+00
                                                  1              1.0      0.032572        0.049426
+RE-READ OF FLOATING-POINT FIELDS FOR ACCURACY.

 BEGIN FOURIER SERIES CALCULATION USING     91   EQUIDISTANT POINTS.   BEGINNING TWO POINTS =
   -0.3937857056E+03    0.1336602631E+03          ENDING TWO POINTS =   -0.8671836548E+03   -0.4032801666E+03

 COEFFICIENTS OF RESULTANT FOURIER SERIES. WITH  "COMPLEX AMPLITUDE"  BEING THE SQUARE ROOT
 OF THE SUM OF THE SQUARES OF THE TWO PRECEDING ENTRIES.   THE FINAL COLUMN APPLIES TO THIS AMPLITUDE.
```

HARMONIC NUMBER	COSINE COEFFICIENT	SINE COEFFICIENT	COMPLEX AMPLITUDE	FRACTION OF FUNDAMENTAL
0	-0.4342032969E+01	0.0000000000E+00	0.4342032969E+01	0.00062689
1	0.3619272003E+03	0.6916849976E+04	0.6926312500E+04	1.00000000
2	-0.2198259377E+02	-0.1042647867E+03	0.1065569334E+03	0.01538437
3	-0.2040585303E+02	-0.7430114937E+02	0.7705231762E+02	0.01112458
4	-0.3705562782E+02	-0.3844796991E+02	0.5339818287E+02	0.00770947
5	-0.5502072449E+03	0.2802525139E+02	0.5509205246E+03	0.07954023
6	0.2564390087E+02	-0.2430320144E+02	0.3533065605E+02	0.00510093
7	0.2610993409E+02	0.2579971743E+02	0.3670632219E+02	0.00529955
8	0.8538932428E+00	-0.2394781876E+02	0.2396303725E+02	0.00345971
9	-0.1248674333E+01	-0.2009081626E+02	0.2012958241E+02	0.00290625
10	-0.1713847071E+01	-0.1650369954E+02	0.1659244919E+02	0.00239557
11	-0.8258271292E+00	-0.1373518312E+02	0.1375998712E+02	0.00198663
12	-0.3589665353E+01	-0.1323189616E+02	0.1371017051E+02	0.00197943
13	-0.4235819221E+01	-0.1011139333E+02	0.1096277523E+02	0.00158277
14	-0.3979342639E+01	-0.1147144473E+02	0.1214204323E+02	0.00175303
15	-0.4378752649E+01	-0.1072459161E+02	0.1158405542E+02	0.00167247
16	-0.4316729367E+01	-0.9167799354E+01	0.1013324714E+02	0.00146301
17	-0.4059594810E+01	-0.6712145627E+01	0.7844310582E+01	0.00113254
18	-0.4886381090E+01	-0.8850940466E+01	0.1011018634E+02	0.00145968
19	-0.5445932508E+01	-0.9158076763E+01	0.1065497780E+02	0.00153833
20	-0.4700953007E+01	-0.6769969881E+01	0.8242053866E+01	0.00118996
21	-0.4758757234E+01	-0.6421509981E+01	0.7992594123E+01	0.00115395
22	-0.5045817971E+01	-0.6116981149E+01	0.7929548383E+01	0.00114484
23	-0.5381374478E+01	-0.5868783653E+01	0.7962525547E+01	0.00114961
24	-0.4886706769E+01	-0.5241813719E+01	0.7166345954E+01	0.00103466
25	-0.4820198357E+01	-0.5027509272E+01	0.6964923680E+01	0.00100557
26	-0.5198098421E+01	-0.4515486002E+01	0.6885480464E+01	0.00099410
27	-0.5194682777E+01	-0.4183256447E+01	0.6669659913E+01	0.00096295
28	-0.5193798780E+01	-0.4020435333E+01	0.6568062603E+01	0.00094828
29	-0.5205795467E+01	-0.3913975626E+01	0.6513026297E+01	0.00094033

```
                                                    1 183                    A-9C  A-9A
+** PLOT CARD.     0.000E+00  0.000E+00  0.000E+00
                                                    1            1.0      0.029989        0.046843
+RE-READ OF FLOATING-POINT FIELDS FOR ACCURACY.
```

BEGIN FOURIER SERIES CALCULATION USING 91 EQUIDISTANT POINTS. BEGINNING TWO POINTS =
-0.3400860138E+03 -0.1005468262E+04 ENDING TWO POINTS = 0.2975142670E+03 -0.3468928528E+03

COEFFICIENTS OF RESULTANT FOURIER SERIES, WITH "COMPLEX AMPLITUDE" BEING THE SQUARE ROOT OF THE SUM OF THE SQUARES OF THE TWO PRECEDING ENTRIES. THE FINAL COLUMN APPLIES TO THIS AMPLITUDE.

HARMONIC NUMBER	COSINE COEFFICIENT	SINE COEFFICIENT	COMPLEX AMPLITUDE	FRACTION OF FUNDAMENTAL
0	-0.3589285731E+01	0.0000000000E+00	0.3589285731E+01	0.00051397
1	-0.8397142868E+03	-0.6932834412E+04	0.6983502930E+04	1.00000000
2	0.1877743506E+02	0.9939684677E+02	0.1011549568E+03	0.01448484
3	0.1660333872E+02	0.4056861448E+02	0.4383472776E+02	0.00627690
4	0.2129052281E+02	0.1978733468E+02	0.2906587291E+02	0.00416208
5	0.2297889023E+03	-0.4206541100E+03	0.4793253822E+03	0.06863681
6	-0.8280391574E+01	0.5400420046E+02	0.5463532352E+02	0.00782348
7	-0.4704241085E+02	0.1996424779E+01	0.4708475494E+02	0.00674228
8	0.7882514715E+01	0.3322749186E+02	0.3414967394E+02	0.00489005
9	0.6233464539E+01	0.2677423692E+02	0.2749028635E+02	0.00393646
10	0.6528077543E+01	0.2301026678E+02	0.2391836476E+02	0.00342498
11	0.4396479189E+01	0.2040135503E+02	0.2086969852E+02	0.00298843
12	0.7119412601E+01	0.1779274082E+02	0.1916422868E+02	0.00274421
13	0.5955579162E+01	0.1445313752E+02	0.1563208580E+02	0.00223843
14	0.7258989990E+01	0.1510206628E+02	0.1675605392E+02	0.00239938
15	0.6940085948E+01	0.1360801995E+02	0.1527556872E+02	0.00218738
16	0.7074581385E+01	0.1249562991E+02	0.1435933387E+02	0.00205618
17	0.5325975299E+01	0.1123667300E+02	0.1243498433E+02	0.00178062
18	0.8051921725E+01	0.1073936403E+02	0.1342264438E+02	0.00192205
19	0.9097292900E+01	0.9770705223E+01	0.1335018420E+02	0.00191167
20	0.7026506245E+01	0.9254999757E+01	0.1162010372E+02	0.00166394
21	0.7269933820E+01	0.8526767731E+01	0.1120525348E+02	0.00160453
22	0.7301167130E+01	0.7972885251E+01	0.1081082523E+02	0.00154805
23	0.7490484357E+01	0.7146203637E+01	0.1035256410E+02	0.00148243
24	0.7256452918E+01	0.7119499922E+01	0.1016579509E+02	0.00145569
25	0.7407828391E+01	0.6751108170E+01	0.1002264357E+02	0.00143519
26	0.7260481060E+01	0.5964472294E+01	0.9396250129E+01	0.00134549
27	0.7333762646E+01	0.5581049740E+01	0.9215866208E+01	0.00131966
28	0.7316947639E+01	0.5192545652E+01	0.8972193360E+01	0.00128477
29	0.7494132042E+01	0.4739675283E+01	0.8867160559E+01	0.00126973

```
                                                    1BLANK CARD ENDING PLOT OUTPUT REQUEST
+BLANK CARD TERMINATING PLOT SPEC. CARDS.
```

DATA CASE E3.

OUTPUT OF THREEE PHASE, BALANCED LOAD SYSTEM

BEFORE FILTERING

```
COMMENT CARD.                                          1C
COMMENT CARD.                                         1C     ------------ FOURIER ANALYSIS OF THE SVC CURRENTS OF THE SYSTEM
FOURIER SERIES STARTED.  NFOUR =      30              1  FOURIER ON
** PLOT CARD.     0.000E+00  0.000E+00  0.000E+00     1  193                        A-3A  A-4A
RE-READ OF FLOATING-POINT FIELDS FOR ACCURACY.        1                1.0       0.034370          0.051223

BEGIN FOURIER SERIES CALCULATION USING     91   EQUIDISTANT POINTS.   BEGINNING TWO POINTS =
  -0.2471923172E+01   -0.7110596299E+01          ENDING TWO POINTS =   -0.1800537750E+01   -0.2593993485E+01
```

COEFFICIENTS OF RESULTANT FOURIER SERIES, WITH "COMPLEX AMPLITUDE" BEING THE SQUARE ROOT OF THE SUM OF THE SQUARES OF THE TWO PRECEDING ENTRIES. THE FINAL COLUMN APPLIES TO THIS AMPLITUDE.

HARMONIC NUMBER	COSINE COEFFICIENT	SINE COEFFICIENT	COMPLEX AMPLITUDE	FRACTION OF FUNDAMENTAL
0	-0.6151807203E-02	0.0000000000E+00	0.6151807203E-02	0.00014266
1	-0.4079811621E+02	-0.1396573877E+02	0.4312224627E+02	1.00000000
2	0.1423487484E+01	0.3001097441E+00	0.1454779193E+01	0.03373616
3	0.7138791978E+01	0.8716606975E+01	0.1126683581E+02	0.26127664
4	0.1765715212E+01	-0.9674289227E+00	0.2013372511E+01	0.04668988
5	0.2879768491E+02	-0.1427958632E+02	0.3214363432E+02	0.74540723
6	-0.1425430134E+01	0.6950234994E+00	0.1585846379E+01	0.03677560
7	0.7693629488E+00	-0.2269248247E+01	0.2396123320E+01	0.05556583
8	-0.3910479508E+00	0.5153281540E+00	0.6469015405E+00	0.01500157
9	0.8853422776E+00	0.5750023574E-01	0.8872075453E+00	0.02057424
10	-0.3353436552E+00	0.3103798851E+00	0.4569365829E+00	0.01059631
11	-0.1408105139E+00	0.2540185340E+00	0.2904359065E+00	0.00673518
12	-0.1703288108E+00	0.2200808357E+00	0.2782938704E+00	0.00645360
13	-0.1305157784E+00	0.2353125960E+00	0.2690843493E+00	0.00624004
14	-0.1133159101E+00	0.2043998167E+00	0.2337087505E+00	0.00541968
15	-0.2755394541E+00	0.5257889777E+00	0.5936127007E+00	0.01376581
16	-0.8390297007E-03	0.4930754006E-01	0.4931467818E-01	0.00114360
17	-0.3060851339E-01	0.9718096629E-01	0.1018872969E+00	0.00236275
18	0.9923933307E-02	0.8507522941E-01	0.8565208130E-01	0.00198626
19	0.3072963166E-01	0.8868789859E-01	0.9386081994E-01	0.00217662
20	0.2861245791E-01	0.9644727409E-01	0.1006019348E+00	0.00233295
21	0.2094594557E+00	0.2364377175E+00	0.3158734851E+00	0.00732507
22	-0.7184345834E-01	0.1195862377E-01	0.7283193804E-01	0.00168896
23	-0.2891437639E-01	0.3995959321E-01	0.4932352621E-01	0.00114381
24	-0.1913650939E-01	0.3735817876E-01	0.4197427211E-01	0.00097338
25	-0.1601764793E-01	0.4222912621E-01	0.4516485520E-01	0.00104737
26	-0.1972135226E-01	0.3685591882E-01	0.4180060374E-01	0.00096935
27	-0.8474783134E-01	0.3822176164E-02	0.8483397868E-01	0.00196729
28	0.5005528079E-01	0.5813209899E-01	0.7671291940E-01	0.00177896
29	0.2830937086E-01	0.4808333004E-01	0.5579809239E-01	0.00129395

```
** PLOT CARD.     0.000E+00  0.000E+00  0.000E+00  1 193                    A-3B  A-4B
RE-READ OF FLOATING-POINT FIELDS FOR ACCURACY.     1              1.0       0.04              0.056761

BEGIN FOURIER SERIES CALCULATION USING     91   EQUIDISTANT POINTS.   BEGINNING TWO POINTS =
  -0.2380371392E+01    -0.7202148080E+01          ENDING TWO POINTS =   -0.1739501640E+01    -0.2563476861E+01
```

COEFFICIENTS OF RESULTANT FOURIER SERIES, WITH "COMPLEX AMPLITUDE" BEING THE SQUARE ROOT OF THE SUM OF THE SQUARES OF THE TWO PRECEDING ENTRIES. THE FINAL COLUMN APPLIES TO THIS AMPLITUDE.

HARMONIC NUMBER	COSINE COEFFICIENT	SINE COEFFICIENT	COMPLEX AMPLITUDE	FRACTION OF FUNDAMENTAL
0	-0.1799128624E-01	0.0000000000E+00	0.1799128624E-01	0.00041705
1	-0.4081442118E+02	-0.1397101164E+02	0.4313938046E+02	1.00000000
2	0.1404632673E+01	0.2905644290E+00	0.1434371173E+01	0.03324969
3	0.7102155805E+01	0.8705797315E+01	0.1123528039E+02	0.26044139
4	0.1725167334E+01	-0.9968535081E+00	0.1992465630E+01	0.04618670
5	0.2880754590E+02	-0.1452263498E+02	0.3226114750E+02	0.74783520
6	-0.1367377877E+01	0.6970010474E+00	0.1534774497E+01	0.03557711
7	0.7894612849E+00	-0.2264474839E+01	0.2398144156E+01	0.05559060
8	-0.3758813441E+00	0.5190152600E+00	0.6408304200E+00	0.01485488
9	0.8898199424E+00	0.6434917543E-01	0.8921436816E+00	0.02068049
10	-0.3314899504E+00	0.3164716363E+00	0.4583010860E+00	0.01062373
11	-0.1223751456E+00	0.2580232508E+00	0.2855725400E+00	0.00661976
12	-0.1655010860E+00	0.2254629377E+00	0.2796857990E+00	0.00648331
13	-0.1283071749E+00	0.2407532390E+00	0.2728091888E+00	0.00632390
14	-0.1109146969E+00	0.2060434055E+00	0.2339999042E+00	0.00542428
15	-0.2688831165E+00	0.5289393514E+00	0.5933590531E+00	0.01375446
16	-0.4466126920E-03	0.5197964469E-01	0.5198156321E-01	0.00120497
17	-0.3222955810E-01	0.1032307651E+00	0.1081449734E+00	0.00250687
18	0.8501504199E-02	0.8495667111E-01	0.8538097888E-01	0.00197919
19	0.3550713975E-01	0.9278353211E-01	0.9934556298E-01	0.00230290
20	0.3167442931E-01	0.1037107529E+00	0.1084397975E+00	0.00251371
21	0.2187762968E+00	0.2348844931E+00	0.3209887743E+00	0.00744074
22	-0.6584022008E-01	0.9883495513E-02	0.6657790951E-01	0.00154332
23	-0.2483670344E-01	0.3887811443E-01	0.4613425629E-01	0.00106942
24	-0.1833118452E-01	0.3806442535E-01	0.4224846512E-01	0.00097935
25	-0.1346384571E-01	0.3763388982E-01	0.3996979864E-01	0.00092653
26	-0.1330599748E-01	0.3291789535E-01	0.3550545592E-01	0.00082304
27	-0.8484084625E-01	0.3492756950E-02	0.8491271082E-01	0.00196833
28	0.5038891267E-01	0.5732519040E-01	0.7632312924E-01	0.00176922
29	0.2674931963E-01	0.4931192705E-01	0.5609984184E-01	0.00130043

```
** PLOT CARD.     0.000E+00  0.000E+00  0.000E+00  1 193                          A-3C  A-4C
RE-READ OF FLOATING-POINT FIELDS FOR ACCURACY.     1                1.0       0.037014          0.053868

BEGIN FOURIER SERIES CALCULATION USING     91   EQUIDISTANT POINTS.   BEGINNING TWO POINTS =
   0.1770020172E+01     0.2563475907E+01          ENDING TWO POINTS =     0.5218505204E+01     0.1831055328E+01
```

COEFFICIENTS OF RESULTANT FOURIER SERIES, WITH "COMPLEX AMPLITUDE" BEING THE SQUARE ROOT OF THE SUM OF THE SQUARES OF THE TWO PRECEDING ENTRIES. THE FINAL COLUMN APPLIES TO THIS AMPLITUDE.

HARMONIC NUMBER	COSINE COEFFICIENT	SINE COEFFICIENT	COMPLEX AMPLITUDE	FRACTION OF FUNDAMENTAL
0	0.8327609976E-02	0.0000000000E+00	0.8327609976E-02	0.00019327
1	0.3969882441E+02	0.1674961901E+02	0.4308765936E+02	1.00000000
2	-0.1370728448E+01	-0.4803288877E+00	0.1452450454E+01	0.03370920
3	-0.5174452603E+01	-0.9972210526E+01	0.1123476493E+02	0.26074206
4	-0.1941415861E+01	0.4816317894E+00	0.2000266165E+01	0.04642318
5	-0.3190505290E+02	0.3893071085E+01	0.3214169264E+02	0.74596052
6	0.1516734198E+01	-0.7143108919E-01	0.1518415302E+01	0.03524014
7	-0.1763391316E+01	0.1645900935E+01	0.2412164778E+01	0.05598273
8	0.5743396655E+00	-0.2373979837E+00	0.6214691103E+00	0.01442337
9	-0.7114472985E+00	-0.5674514845E+00	0.9100321159E+00	0.02112048
10	0.4394215718E+00	-0.3556669969E-01	0.4408586025E+00	0.01023167
11	0.2470261380E+00	-0.9689666517E-01	0.2653504796E+00	0.00615839
12	0.2533030510E+00	-0.2867712942E-01	0.2549211904E+00	0.00591634
13	0.2495992500E+00	-0.5231444910E-01	0.2550227195E+00	0.00591870
14	0.2146822810E+00	-0.1843811478E-01	0.2154726107E+00	0.00500080
15	0.5745500475E+00	-0.3452621959E-01	0.5755864978E+00	0.01335850
16	0.2971689100E-01	-0.2459096536E-01	0.3857212979E-01	0.00089520
17	0.8801436611E-01	-0.9733964573E-02	0.8855099510E-01	0.00205514
18	0.5428404547E-01	-0.3776880959E-01	0.6613048166E-01	0.00153479
19	0.5534194270E-01	-0.5393725540E-01	0.7727844547E-01	0.00179352
20	0.7331238221E-01	-0.4785441095E-01	0.8754855860E-01	0.00203187
21	0.1888983566E+00	-0.2401839457E+00	0.3055665530E+00	0.00709174
22	-0.6608461990E-03	0.6908931397E-01	0.6909247488E-01	0.00160353
23	0.1628860738E-01	0.2573447209E-01	0.3045622748E-01	0.00070684
24	0.2002418996E-01	0.1802473469E-01	0.2694177511E-01	0.00062528
25	0.1225397130E-01	0.2387322462E-01	0.2683450514E-01	0.00062279
26	0.1084871648E-01	0.2618050925E-01	0.2833926096E-01	0.00065771
27	-0.4205399659E-01	0.8822684269E-01	0.9773696586E-01	0.00226833
28	0.5423384532E-01	-0.2669826057E-01	0.6044921093E-01	0.00140294
29	0.3707634471E-01	-0.7735543826E-02	0.3787471401E-01	0.00087902

```
** PLOT CARD.     0.000E+00  0.000E+00  0.000E+00  1 183                    A-9A  A-9B
RE-READ OF FLOATING-POINT FIELDS FOR ACCURACY.    1              1.0      0.027179        0.044033

BEGIN FOURIER SERIES CALCULATION USING    91   EQUIDISTANT POINTS.   BEGINNING TWO POINTS =
   0.2328396301E+03    0.8357067413E+03          ENDING TWO POINTS =   -0.3423726807E+03    0.2380149689E+03

COEFFICIENTS OF RESULTANT FOURIER SERIES, WITH  "COMPLEX AMPLITUDE"  BEING THE SQUARE ROOT
OF THE SUM OF THE SQUARES OF THE TWO PRECEDING ENTRIES.   THE FINAL COLUMN APPLIES TO THIS AMPLITUDE.
 HARMONIC              COSINE                SINE              COMPLEX          FRACTION OF
   NUMBER          COEFFICIENT           COEFFICIENT          AMPLITUDE         FUNDAMENTAL
        0    0.2092032969E+01    0.0000000000E+00    0.2092032969E+01          0.00029963
        1    0.7538736267E+03    0.6941261108E+04    0.6982079285E+04          1.00000000
        2   -0.1955616307E+02   -0.1014910030E+03    0.1033579569E+03          0.01480332
        3   -0.1829273820E+02   -0.5240987062E+02    0.5551052856E+02          0.00795043
        4   -0.2429761028E+02   -0.2761209750E+02    0.3678045368E+02          0.00526784
        5   -0.2726864281E+03    0.2514546223E+03    0.3709276390E+03          0.05312567
        6    0.1234444356E+02   -0.4380197906E+02    0.4550822639E+02          0.00651786
        7    0.3730746889E+02    0.5157419026E+01    0.3766226482E+02          0.00539413
        8   -0.5182404578E+01   -0.2948767877E+02    0.2993961453E+02          0.00428807
        9   -0.4904223800E+01   -0.2384459972E+02    0.2434371281E+02          0.00348660
       10   -0.5016966760E+01   -0.2050261736E+02    0.2110751700E+02          0.00302310
       11   -0.3197438508E+01   -0.1755932355E+02    0.1784806585E+02          0.00255627
       12   -0.5984493554E+01   -0.1617976737E+02    0.1725105906E+02          0.00247076
       13   -0.5351075172E+01   -0.1368970931E+02    0.1469837224E+02          0.00210516
       14   -0.6185169458E+01   -0.1354620302E+02    0.1489147198E+02          0.00213281
       15   -0.6170450091E+01   -0.1231437755E+02    0.1377382839E+02          0.00197274
       16   -0.6098786354E+01   -0.1126980197E+02    0.1281419647E+02          0.00183530
       17   -0.4776349247E+01   -0.1005474079E+02    0.1113154638E+02          0.00159430
       18   -0.6975667894E+01   -0.9770463347E+01    0.1200507796E+02          0.00171941
       19   -0.7815993130E+01   -0.9004577041E+01    0.1192359662E+02          0.00170774
       20   -0.6219310164E+01   -0.8363777757E+01    0.1042269623E+02          0.00149278
       21   -0.6408589065E+01   -0.7775835335E+01    0.1007638967E+02          0.00144318
       22   -0.6489561677E+01   -0.7216200709E+01    0.9705048323E+01          0.00138999
       23   -0.6707797170E+01   -0.6554241538E+01    0.9378306150E+01          0.00134320
       24   -0.6425023377E+01   -0.6397294283E+01    0.9066769004E+01          0.00129858
       25   -0.6530700147E+01   -0.6020149589E+01    0.8882130623E+01          0.00127213
       26   -0.6492048025E+01   -0.5432186723E+01    0.8464947701E+01          0.00121238
       27   -0.6524384320E+01   -0.5072554529E+01    0.8264284611E+01          0.00118364
       28   -0.6557968736E+01   -0.4711606443E+01    0.8075034976E+01          0.00115654
       29   -0.6691077232E+01   -0.4323711634E+01    0.7966492116E+01          0.00114099
```

** PLOT CARD. 0.000E+00 0.000E+00 0.000E+00 1 183 A-9B A-9C
RE-READ OF FLOATING-POINT FIELDS FOR ACCURACY. 1 1.0 0.032572 0.049426

BEGIN FOURIER SERIES CALCULATION USING 91 EQUIDISTANT POINTS. BEGINNING TWO POINTS =
-0.3505291443E+03 0.2286112366E+03 ENDING TWO POINTS = -0.8803748169E+03 -0.3437861633E+03

COEFFICIENTS OF RESULTANT FOURIER SERIES, WITH "COMPLEX AMPLITUDE" BEING THE SQUARE ROOT
OF THE SUM OF THE SQUARES OF THE TWO PRECEDING ENTRIES. THE FINAL COLUMN APPLIES TO THIS AMPLITUDE.

HARMONIC NUMBER	COSINE COEFFICIENT	SINE COEFFICIENT	COMPLEX AMPLITUDE	FRACTION OF FUNDAMENTAL
0	-0.4078296721E+01	0.0000000000E+00	0.4078296721E+01	0.00058402
1	0.2592541237E+03	0.6978340088E+04	0.6983154236E+04	1.00000000
2	-0.1761090970E+02	-0.1030025730E+03	0.1044972448E+03	0.01496419
3	-0.1912589073E+02	-0.5437858868E+02	0.5764399910E+02	0.00825472
4	-0.2777391648E+02	-0.3202565908E+02	0.4239142942E+02	0.00607053
5	-0.3552107925E+03	0.1502568302E+03	0.3856835785E+03	0.05523057
6	0.1405346286E+02	-0.3593017244E+02	0.3858078671E+02	0.00552484
7	0.1696126485E+02	0.2118550515E+02	0.2713872027E+02	0.00388631
8	-0.2245000482E+01	-0.2832955217E+02	0.2841836643E+02	0.00406956
9	-0.3179390043E+01	-0.2267498112E+02	0.2289679646E+02	0.00327886
10	-0.3880242676E+01	-0.1932930255E+02	0.1971492386E+02	0.00282321
11	-0.3252709210E+01	-0.1521836364E+02	0.1556209207E+02	0.00222852
12	-0.5100142777E+01	-0.1560422421E+02	0.1641655469E+02	0.00235088
13	-0.5594582200E+01	-0.1294635653E+02	0.1410345697E+02	0.00201964
14	-0.5299824476E+01	-0.1299069977E+02	0.1403019679E+02	0.00200915
15	-0.5474416554E+01	-0.1175871170E+02	0.1297060287E+02	0.00185741
16	-0.5586430311E+01	-0.1068525565E+02	0.1205748284E+02	0.00172665
17	-0.5474263251E+01	-0.8444103956E+01	0.1006332195E+02	0.00144109
18	-0.5893905103E+01	-0.9895593166E+01	0.1151785052E+02	0.00164938
19	-0.6186185241E+01	-0.9991212368E+01	0.1175130677E+02	0.00168281
20	-0.5845337510E+01	-0.7810993373E+01	0.9756002665E+01	0.00139708
21	-0.5939990640E+01	-0.7416190207E+01	0.9501755953E+01	0.00136067
22	-0.6002802253E+01	-0.6961405456E+01	0.9192105293E+01	0.00131633
23	-0.6201889992E+01	-0.6693101525E+01	0.9124749184E+01	0.00130668
24	-0.5941867888E+01	-0.5940931678E+01	0.8402408123E+01	0.00120324
25	-0.5907308638E+01	-0.5605985880E+01	0.8143916368E+01	0.00116622
26	-0.6123954654E+01	-0.5199306965E+01	0.8033406019E+01	0.00115040
27	-0.6118367553E+01	-0.4853312016E+01	0.7809549212E+01	0.00111834
28	-0.6130253851E+01	-0.4528473079E+01	0.7621488094E+01	0.00109141
29	-0.6134454191E+01	-0.4333421707E+01	0.7510663927E+01	0.00107554

```
** PLOT CARD.     0.000E+00  0.000E+00  0.000E+00  1 183                    A-9C  A-9A
RE-READ OF FLOATING-POINT FIELDS FOR ACCURACY.    1              1.0      0.029989        0.046843

BEGIN FOURIER SERIES CALCULATION USING     91   EQUIDISTANT POINTS.   BEGINNING TWO POINTS =
  -0.2315474396E+03   -0.8378944397E+03          ENDING TWO POINTS =    0.3426179810E+03   -0.2381859283E+03

COEFFICIENTS OF RESULTANT FOURIER SERIES, WITH  "COMPLEX AMPLITUDE"  BEING THE SQUARE ROOT
OF THE SUM OF THE SQUARES OF THE TWO PRECEDING ENTRIES.   THE FINAL COLUMN APPLIES TO THIS AMPLITUDE.
```

HARMONIC NUMBER	COSINE COEFFICIENT	SINE COEFFICIENT	COMPLEX AMPLITUDE	FRACTION OF FUNDAMENTAL
0	-0.2375000000E+01	0.0000000000E+00	0.2375000000E+01	0.00034023
1	-0.7522925873E+03	-0.6939820923E+04	0.6980476929E+04	1.00000000
2	0.1880371642E+02	0.1014173117E+03	0.1031457748E+03	0.01477632
3	0.1728965807E+02	0.5206708050E+02	0.5486267519E+02	0.00785945
4	0.2305181146E+02	0.2709744096E+02	0.3557607794E+02	0.00509651
5	0.2698108749E+03	-0.2552281876E+03	0.3714018517E+03	0.05320580
6	-0.1062911022E+02	0.4333633804E+02	0.4462080431E+02	0.00639223
7	-0.3648727036E+02	-0.5046983898E+01	0.3683467054E+02	0.00527681
8	0.5665799320E+01	0.2951732016E+02	0.3005617189E+02	0.00430575
9	0.5196969211E+01	0.2395067096E+02	0.2450802159E+02	0.00351094
10	0.5262440443E+01	0.2054526901E+02	0.2120852089E+02	0.00303826
11	0.3381204635E+01	0.1759349489E+02	0.1791545725E+02	0.00256651
12	0.6158963561E+01	0.1621747637E+02	0.1734760404E+02	0.00248516
13	0.5493050158E+01	0.1373044741E+02	0.1478846800E+02	0.00211855
14	0.6310899019E+01	0.1358177233E+02	0.1497638094E+02	0.00214547
15	0.6270047665E+01	0.1233927035E+02	0.1384092093E+02	0.00198280
16	0.6203797221E+01	0.1129415059E+02	0.1288584256E+02	0.00184598
17	0.4865548015E+01	0.1007958388E+02	0.1119247818E+02	0.00160340
18	0.7059807956E+01	0.9792484879E+01	0.1207201922E+02	0.00172940
19	0.7890669405E+01	0.9019724011E+01	0.1198407638E+02	0.00171680
20	0.6293215930E+01	0.8385002255E+01	0.1048393202E+02	0.00150189
21	0.6479136884E+01	0.7788307250E+01	0.1013098931E+02	0.00145133
22	0.6553973734E+01	0.7235576034E+01	0.9762588382E+01	0.00139856
23	0.6770205081E+01	0.6571675897E+01	0.9435178876E+01	0.00135165
24	0.6481469214E+01	0.6414556265E+01	0.9118989825E+01	0.00130636
25	0.6585803151E+01	0.6035455883E+01	0.8933058381E+01	0.00127972
26	0.6543450534E+01	0.5446320474E+01	0.8513468862E+01	0.00121961
27	0.6576499104E+01	0.5086881936E+01	0.8314247251E+01	0.00119107
28	0.6606061339E+01	0.4725154817E+01	0.8122015476E+01	0.00116353
29	0.6737945139E+01	0.4334772289E+01	0.8011875987E+01	0.00114775

```
BLANK CARD TERMINATING PLOT SPEC. CARDS.          1BLANK CARD ENDING PLOT OUTPUT REQUEST
```

DATA CASE E3.

OUTPUT OF THREEE PHASE, BALANCED LOAD SYSTEM

AFTER FILTERING

```
+COMMENT CARD.

+COMMENT CARD.

+FOURIER SERIES STARTED.  NFOUR =      30

+** PLOT CARD.    0.000E+00  0.000E+00  0.000E+00

+RE-READ OF FLOATING-POINT FIELDS FOR ACCURACY.
```

```
1C

1C    ------------ FOURIER ANALYSIS OF THE SVC CURRENTS OF THI

1  FOURIER ON

1 193                          A-3A  A-4A

1                1.0       0.03              0.046761
```

```
BEGIN FOURIER SERIES CALCULATION USING     91   EQUIDISTANT POINTS.   BEGINNING TWO POINTS =
   0.1793365463E+04    0.1744049072E+04          ENDING TWO POINTS =    0.1581512451E+04    0.1546386703E+04
```

COEFFICIENTS OF RESULTANT FOURIER SERIES, WITH "COMPLEX AMPLITUDE" BEING THE SQUARE ROOT OF THE SUM OF THE SQUARES OF THE TWO PRECEDING ENTRIES. THE FINAL COLUMN APPLIES TO THIS AMPLITUDE.

HARMONIC NUMBER	COSINE COEFFICIENT	SINE COEFFICIENT	COMPLEX AMPLITUDE	FRACTION OF FUNDAMENTAL
0	0.2125077271E+02	0.0000000000E+00	0.2125077271E+02	0.01257166
1	0.1572929352E+04	-0.6190695648E+03	0.1690370926E+04	1.00000000
2	0.5696689367E+02	0.6761795807E+02	0.8841614819E+02	0.05230577
3	0.6582380056E+01	0.3807713890E+02	0.3864189720E+02	0.02286001
4	0.4295242488E+01	0.2480700183E+02	0.2517610860E+02	0.01489384
5	0.3839869261E+01	0.1880591798E+02	0.1919393516E+02	0.01135487
6	0.3595901668E+01	0.1522619605E+02	0.1564504886E+02	0.00925539
7	0.3434239656E+01	0.1274574733E+02	0.1320030594E+02	0.00780912
8	0.3336954981E+01	0.1093390310E+02	0.1143177617E+02	0.00676288
9	0.3277727425E+01	0.9559522390E+01	0.1010583818E+02	0.00597847
10	0.3237366408E+01	0.8481104493E+01	0.9077977419E+01	0.00537041
11	0.3210464001E+01	0.7586512625E+01	0.8237854838E+01	0.00487340
12	0.3203255802E+01	0.6770500660E+01	0.7490028501E+01	0.00443100
13	0.3542639434E+01	0.5706207812E+01	0.6716479897E+01	0.00397338
14	0.3860205352E+01	0.7363616109E+01	0.8314086080E+01	0.00491850
15	0.2943880856E+01	0.6167894900E+01	0.6834424794E+01	0.00404315
16	0.2863305062E+01	0.5483711421E+01	0.6186243355E+01	0.00365970
17	0.2869245946E+01	0.4978450596E+01	0.5746089339E+01	0.00339931
18	0.2935914099E+01	0.4575231612E+01	0.5436206043E+01	0.00321598
19	0.3006700128E+01	0.4238211691E+01	0.5196410716E+01	0.00307412
20	0.3070833325E+01	0.3967181563E+01	0.5016826391E+01	0.00296788
21	0.3118517876E+01	0.3713576913E+01	0.4849309981E+01	0.00286878
22	0.3150813192E+01	0.3486870021E+01	0.4699562371E+01	0.00278020
23	0.3167196423E+01	0.3269047379E+01	0.4551681459E+01	0.00269271
24	0.3162477940E+01	0.3045801371E+01	0.4390691578E+01	0.00259747
25	0.3164728880E+01	0.2822109997E+01	0.4240261078E+01	0.00250848
26	0.3174499869E+01	0.2596302599E+01	0.4101004362E+01	0.00242610
27	0.3189870000E+01	0.2390606254E+01	0.3986259997E+01	0.00235822
28	0.3203508317E+01	0.2207843632E+01	0.3890634805E+01	0.00230165
29	0.3212304443E+01	0.2043876648E+01	0.3807404846E+01	0.00225241

```
                                                    1 193                          A-3B  A-4B
+** PLOT CARD.     0.000E+00  0.000E+00  0.000E+00
                                                    1                1.0       0.03              0.046761
+RE-READ OF FLOATING-POINT FIELDS FOR ACCURACY.

 BEGIN FOURIER SERIES CALCULATION USING    91   EQUIDISTANT POINTS.   BEGINNING TWO POINTS =
   -0.3917236328E+03   -0.2680053673E+03          ENDING TWO POINTS =   -0.4102783165E+03   -0.2998046875E+03

 COEFFICIENTS OF RESULTANT FOURIER SERIES, WITH  "COMPLEX AMPLITUDE"  BEING THE SQUARE ROOT
 OF THE SUM OF THE SQUARES OF THE TWO PRECEDING ENTRIES.   THE FINAL COLUMN APPLIES TO THIS AMPLITUDE.
```

HARMONIC NUMBER	COSINE COEFFICIENT	SINE COEFFICIENT	COMPLEX AMPLITUDE	FRACTION OF FUNDAMENTAL
0	0.6486950576E+01	0.0000000000E+00	0.6486950576E+01	0.00390152
1	-0.2414900417E+03	0.1645041412E+04	0.1662672150E+04	1.00000000
2	-0.4675796556E+02	-0.3546441698E+02	0.5868587780E+02	0.03529612
3	-0.6123748481E+01	-0.2767676425E+02	0.2834613872E+02	0.01704854
4	-0.2349654317E+01	-0.1710442090E+02	0.1726505399E+02	0.01038392
5	-0.2291086048E+01	-0.1209076941E+02	0.1230592453E+02	0.00740129
6	-0.2841299891E+01	-0.9573487997E+01	0.9986223340E+01	0.00600613
7	-0.3293759197E+01	-0.8303621173E+01	0.8933027148E+01	0.00537269
8	-0.3449836165E+01	-0.7656189978E+01	0.8397536278E+01	0.00505063
9	-0.3304287106E+01	-0.7219065070E+01	0.7939345956E+01	0.00477505
10	-0.2955238938E+01	-0.6763364971E+01	0.7380822659E+01	0.00443913
11	-0.2531956106E+01	-0.6172081351E+01	0.6671236038E+01	0.00401236
12	-0.2110630423E+01	-0.5358427048E+01	0.5759123325E+01	0.00346378
13	-0.1850497916E+01	-0.3837722242E+01	0.4260569751E+01	0.00256248
14	-0.4214822412E+01	-0.4894390225E+01	0.6459085345E+01	0.00388476
15	-0.2724984407E+01	-0.4496092856E+01	0.5257412970E+01	0.00316203
16	-0.2512129158E+01	-0.3898557484E+01	0.4637838244E+01	0.00278939
17	-0.2480069011E+01	-0.3472134471E+01	0.4266902864E+01	0.00256629
18	-0.2478943974E+01	-0.3157767862E+01	0.4014556170E+01	0.00241452
19	-0.2455778033E+01	-0.2895939142E+01	0.3797013193E+01	0.00228368
20	-0.2435072362E+01	-0.2685578823E+01	0.3625177383E+01	0.00218033
21	-0.2395864308E+01	-0.2480277687E+01	0.3448469698E+01	0.00207405
22	-0.2358604848E+01	-0.2301190019E+01	0.3295222670E+01	0.00198188
23	-0.2341164142E+01	-0.2139087945E+01	0.3171237439E+01	0.00190731
24	-0.2316820681E+01	-0.1992355719E+01	0.3055673301E+01	0.00183781
25	-0.2308721036E+01	-0.1872252792E+01	0.2972460836E+01	0.00178776
26	-0.2290146708E+01	-0.1761098966E+01	0.2888986260E+01	0.00173756
27	-0.2286734879E+01	-0.1655916721E+01	0.2823334306E+01	0.00169807
28	-0.2264070779E+01	-0.1556056872E+01	0.2747240335E+01	0.00165230
29	-0.2265125066E+01	-0.1454103515E+01	0.2691692501E+01	0.00161890

```
                                                  1 193                    A-3C  A-4C
+** PLOT CARD.     0.000E+00  0.000E+00  0.000E+00
                                                  1              1.0      0.03            0.046761
+RE-READ OF FLOATING-POINT FIELDS FOR ACCURACY.

 BEGIN FOURIER SERIES CALCULATION USING     91   EQUIDISTANT POINTS.   BEGINNING TWO POINTS =
   -0.1317687973E+04   -0.1399200439E+04          ENDING TWO POINTS =   -0.1143463135E+04   -0.1210113510E+04

 COEFFICIENTS OF RESULTANT FOURIER SERIES, WITH  "COMPLEX AMPLITUDE"  BEING THE SQUARE ROOT
 OF THE SUM OF THE SQUARES OF THE TWO PRECEDING ENTRIES.   THE FINAL COLUMN APPLIES TO THIS AMPLITUDE.
```

HARMONIC NUMBER	COSINE COEFFICIENT	SINE COEFFICIENT	COMPLEX AMPLITUDE	FRACTION OF FUNDAMENTAL
0	-0.2309271979E+02	0.0000000000E+00	0.2309271979E+02	0.01381272
1	-0.1321675827E+04	-0.1023833656E+04	0.1671843994E+04	1.00000000
2	0.2347554296E+01	-0.2807217836E+02	0.2817016506E+02	0.01684976
3	0.9945356846E+01	-0.5106483400E+01	0.1117972696E+02	0.00668706
4	0.6106998026E+01	-0.2053662330E+01	0.6443054676E+01	0.00385386
5	0.4217349887E+01	-0.1424094856E+01	0.4451301634E+01	0.00266251
6	0.3169492632E+01	-0.1300615191E+01	0.3425971895E+01	0.00204922
7	0.2485340506E+01	-0.1292971417E+01	0.2801551819E+01	0.00167573
8	0.1995306671E+01	-0.1302093431E+01	0.2382581800E+01	0.00142512
9	0.1591059431E+01	-0.1252805293E+01	0.2025090426E+01	0.00121129
10	0.1192221180E+01	-0.1171509355E+01	0.1671474054E+01	0.00099978
11	0.7763903290E+00	-0.1095245063E+01	0.1342513949E+01	0.00080301
12	0.2785094567E+00	-0.1068771735E+01	0.1104463920E+01	0.00066063
13	-0.5284098536E+00	-0.1408739701E+01	0.1504581183E+01	0.00089995
14	0.1241363868E+01	-0.1885236010E+01	0.2257232606E+01	0.00135015
15	0.4067490138E+00	-0.1018569589E+01	0.1096781090E+01	0.00065603
16	0.6418785732E-01	-0.9601009339E+00	0.9622441903E+00	0.00057556
17	-0.8480164316E-01	-0.9407227784E+00	0.9445372745E+00	0.00056497
18	-0.1490847412E+00	-0.9004167020E+00	0.9126754627E+00	0.00054591
19	-0.1638290919E+00	-0.8336592540E+00	0.8496044502E+00	0.00050818
20	-0.1710241977E+00	-0.7352847233E+00	0.7549125105E+00	0.00045154
21	-0.1782032065E+00	-0.6399517730E+00	0.6643001214E+00	0.00039735
22	-0.2000148911E+00	-0.5446747020E+00	0.5802382976E+00	0.00034706
23	-0.2314614113E+00	-0.4749843255E+00	0.5283791199E+00	0.00031605
24	-0.2512887828E+00	-0.4289658591E+00	0.4971496388E+00	0.00029737
25	-0.2709384151E+00	-0.4019330181E+00	0.4847244322E+00	0.00028993
26	-0.2786838412E+00	-0.3855857477E+00	0.4757531434E+00	0.00028457
27	-0.2749757878E+00	-0.3793074563E+00	0.4684931487E+00	0.00028023
28	-0.2640997916E+00	-0.3607912585E+00	0.4471230619E+00	0.00026744
29	-0.2641578093E+00	-0.3369417042E+00	0.4281460755E+00	0.00025609

```
                                                        1 183                          A-9A  A-9B
+** PLOT CARD.     0.000E+00  0.000E+00  0.000E+00
                                                        1              1.0       0.03              0.046761
+RE-READ OF FLOATING-POINT FIELDS FOR ACCURACY.

 BEGIN FOURIER SERIES CALCULATION USING     91   EQUIDISTANT POINTS.   BEGINNING TWO POINTS =
    0.7057054504E+04    0.7473483154E+04          ENDING TWO POINTS =    0.6587048645E+04    0.7005935791E+04

 COEFFICIENTS OF RESULTANT FOURIER SERIES, WITH  "COMPLEX AMPLITUDE"  BEING THE SQUARE ROOT
 OF THE SUM OF THE SQUARES OF THE TWO PRECEDING ENTRIES.   THE FINAL COLUMN APPLIES TO THIS AMPLITUDE.
  HARMONIC                COSINE                  SINE                COMPLEX          FRACTION OF
    NUMBER            COEFFICIENT             COEFFICIENT            AMPLITUDE          FUNDAMENTAL
         0     0.1374896984E+03     0.0000000000E+00     0.1374896984E+03          0.01499922
         1     0.7374989014E+04     0.5443665588E+04     0.9166458374E+04          1.00000000
         2    -0.1465794353E+03     0.7858850193E+02     0.1663180180E+03          0.01814420
         3    -0.5936459589E+02    -0.2879608178E+02     0.6598006916E+02          0.00719799
         4    -0.2849079108E+02    -0.2405269456E+02     0.3728615427E+02          0.00406767
         5    -0.1813501525E+02    -0.1914547610E+02     0.2637096953E+02          0.00287690
         6    -0.1364964211E+02    -0.1638985562E+02     0.2132932472E+02          0.00232689
         7    -0.1104513526E+02    -0.1493961799E+02     0.1857921410E+02          0.00202687
         8    -0.9022369742E+01    -0.1394598830E+02     0.1661004949E+02          0.00181205
         9    -0.7274478495E+01    -0.1282518709E+02     0.1474460793E+02          0.00160854
        10    -0.5935690403E+01    -0.1129507005E+02     0.1275974250E+02          0.00139200
        11    -0.5293408751E+01    -0.9314361453E+01     0.1071342635E+02          0.00116876
        12    -0.5896900237E+01    -0.6941334963E+01     0.9107994437E+01          0.00099362
        13    -0.1066288471E+02    -0.4698984861E+01     0.1165236318E+02          0.00127120
        14    -0.2960539103E+01    -0.1691004300E+02     0.1716724634E+02          0.00187283
        15    -0.2418050587E+01    -0.8003636003E+01     0.8360930443E+01          0.00091212
        16    -0.3831749558E+01    -0.6014391184E+01     0.7131283641E+01          0.00077798
        17    -0.4705025852E+01    -0.5278636575E+01     0.7071157813E+01          0.00077142
        18    -0.5146036386E+01    -0.4988473177E+01     0.7167046487E+01          0.00078188
        19    -0.5254031003E+01    -0.4826547921E+01     0.7134452105E+01          0.00077832
        20    -0.5126687527E+01    -0.4632066846E+01     0.6909339190E+01          0.00075376
        21    -0.4895267725E+01    -0.4345341384E+01     0.6545657992E+01          0.00071409
        22    -0.4671178818E+01    -0.3976041347E+01     0.6134233117E+01          0.00066920
        23    -0.4510967553E+01    -0.3581550151E+01     0.5759889781E+01          0.00062837
        24    -0.4424088359E+01    -0.3213891327E+01     0.5468240619E+01          0.00059655
        25    -0.4386065483E+01    -0.2907563865E+01     0.5262271225E+01          0.00057408
        26    -0.4366408169E+01    -0.2677229255E+01     0.5121823609E+01          0.00055876
        27    -0.4337167621E+01    -0.2505743355E+01     0.5008969247E+01          0.00054645
        28    -0.4285112023E+01    -0.2363437504E+01     0.4893671632E+01          0.00053387
        29    -0.4218457580E+01    -0.2225072443E+01     0.4769311488E+01          0.00052030
```

```
                                                    1 183                          A-9B  A-9C
+** PLOT CARD.     0.000E+00  0.000E+00  0.000E+00
                                                    1              1.0       0.03              0.046761
+RE-READ OF FLOATING-POINT FIELDS FOR ACCURACY.

 BEGIN FOURIER SERIES CALCULATION USING     91   EQUIDISTANT POINTS.   BEGINNING TWO POINTS =
   -0.8677810547E+04   -0.8447478271E+04          ENDING TWO POINTS =   -0.8700423584E+04   -0.8503578613E+04

 COEFFICIENTS OF RESULTANT FOURIER SERIES, WITH  "COMPLEX AMPLITUDE"  BEING THE SQUARE ROOT
 OF THE SUM OF THE SQUARES OF THE TWO PRECEDING ENTRIES.   THE FINAL COLUMN APPLIES TO THIS AMPLITUDE.
```

HARMONIC NUMBER	COSINE COEFFICIENT	SINE COEFFICIENT	COMPLEX AMPLITUDE	FRACTION OF FUNDAMENTAL
0	-0.1248001375E+03	0.0000000000E+00	0.1248001375E+03	0.01366521
1	-0.8425877075E+04	0.3522867981E+04	0.9132688721E+04	1.00000000
2	0.9899886250E+01	-0.1513607292E+03	0.1516841393E+03	0.01660892
3	0.1479280245E+02	-0.6644148254E+02	0.6806833076E+02	0.00745326
4	0.3442806721E+01	-0.4344313622E+02	0.4357934141E+02	0.00477180
5	-0.9189801961E+00	-0.3242953157E+02	0.3244254971E+02	0.00355235
6	-0.2768109351E+01	-0.2537578273E+02	0.2552631545E+02	0.00279505
7	-0.3741315573E+01	-0.2030157161E+02	0.2064343119E+02	0.00226039
8	-0.4428413153E+01	-0.1657511067E+02	0.1715648961E+02	0.00187858
9	-0.5004153073E+01	-0.1395940328E+02	0.1482924438E+02	0.00162375
10	-0.5409289718E+01	-0.1230995238E+02	0.1344601595E+02	0.00147230
11	-0.5579769611E+01	-0.1152187371E+02	0.1280185151E+02	0.00140176
12	-0.5329101563E+01	-0.1165280950E+02	0.1281355894E+02	0.00140304
13	-0.3378144324E+01	-0.1387963188E+02	0.1428481853E+02	0.00156414
14	0.1113254428E+01	-0.3648793876E+01	0.3814843655E+01	0.00041771
15	-0.3084698021E+01	-0.5763152003E+01	0.6536763966E+01	0.00071575
16	-0.3070156902E+01	-0.6227169991E+01	0.6942874730E+01	0.00076022
17	-0.2861363024E+01	-0.6116862357E+01	0.6753029227E+01	0.00073943
18	-0.2744250625E+01	-0.5804450214E+01	0.6420479238E+01	0.00070302
19	-0.2776579142E+01	-0.5460546732E+01	0.6125925422E+01	0.00067077
20	-0.2916933179E+01	-0.5162460744E+01	0.5929544687E+01	0.00064927
21	-0.3117828727E+01	-0.4922881305E+01	0.5827144802E+01	0.00063805
22	-0.3320902735E+01	-0.4742250323E+01	0.5789415598E+01	0.00063392
23	-0.3500163674E+01	-0.4577800035E+01	0.5762586117E+01	0.00063098
24	-0.3641953021E+01	-0.4407145619E+01	0.5717233121E+01	0.00062602
25	-0.3754212111E+01	-0.4204502583E+01	0.5636661291E+01	0.00061720
26	-0.3852627605E+01	-0.3968129456E+01	0.5530713439E+01	0.00060560
27	-0.3943337917E+01	-0.3705943614E+01	0.5411463022E+01	0.00059254
28	-0.4036224067E+01	-0.3433329493E+01	0.5298948586E+01	0.00058022
29	-0.4121826172E+01	-0.3164691061E+01	0.5196606636E+01	0.00056901

```
                                                  1 183                    A-9C  A-9A
+** PLOT CARD.     0.000E+00  0.000E+00  0.000E+00
                                                  1              1.0      0.03            0.046761
+RE-READ OF FLOATING-POINT FIELDS FOR ACCURACY.

 BEGIN FOURIER SERIES CALCULATION USING     91   EQUIDISTANT POINTS.   BEGINNING TWO POINTS =
    0.1620755997E+04    0.9739950867E+03          ENDING TWO POINTS =    0.2113374878E+04    0.1497642822E+04

 COEFFICIENTS OF RESULTANT FOURIER SERIES, WITH  "COMPLEX AMPLITUDE"  BEING THE SQUARE ROOT
 OF THE SUM OF THE SQUARES OF THE TWO PRECEDING ENTRIES.   THE FINAL COLUMN APPLIES TO THIS AMPLITUDE.
```

HARMONIC NUMBER	COSINE COEFFICIENT	SINE COEFFICIENT	COMPLEX AMPLITUDE	FRACTION OF FUNDAMENTAL
0	-0.1267719781E+02	0.0000000000E+00	0.1267719781E+02	0.00140422
1	0.1050887360E+04	-0.8966536987E+04	0.9027909546E+04	1.00000000
2	0.1366794415E+03	0.7277123451E+02	0.1548448334E+03	0.01715179
3	0.4457174015E+02	0.9523786163E+02	0.1051517487E+03	0.01164741
4	0.2504800463E+02	0.6749589729E+02	0.7199374104E+02	0.00797457
5	0.1905398321E+02	0.5157475996E+02	0.5498190784E+02	0.00609021
6	0.1641755962E+02	0.4176576424E+02	0.4487666798E+02	0.00497088
7	0.1478644145E+02	0.3524114275E+02	0.3821749592E+02	0.00423326
8	0.1345077550E+02	0.3052101374E+02	0.3335349512E+02	0.00369449
9	0.1227858591E+02	0.2678458667E+02	0.2946485639E+02	0.00326375
10	0.1134491444E+02	0.2360507584E+02	0.2618982029E+02	0.00290098
11	0.1087319577E+02	0.2083621430E+02	0.2350264263E+02	0.00260333
12	0.1122601259E+02	0.1859413648E+02	0.2172015810E+02	0.00240589
13	0.1404102707E+02	0.1857861948E+02	0.2328766942E+02	0.00257952
14	0.1847265229E+01	0.2055881643E+02	0.2064164042E+02	0.00228643
15	0.5502739549E+01	0.1376677930E+02	0.1482580030E+02	0.00164222
16	0.6901894033E+01	0.1224154770E+02	0.1405317152E+02	0.00155664
17	0.7566399932E+01	0.1139551628E+02	0.1367874992E+02	0.00151516
18	0.7890297055E+01	0.1079292178E+02	0.1336951566E+02	0.00148091
19	0.8030613899E+01	0.1028709793E+02	0.1305048442E+02	0.00144557
20	0.8043607354E+01	0.9794519663E+01	0.1267407727E+02	0.00140388
21	0.8013114572E+01	0.9268218279E+01	0.1225193346E+02	0.00135712
22	0.7992079556E+01	0.8718299389E+01	0.1182717550E+02	0.00131007
23	0.8011137962E+01	0.8159342170E+01	0.1143473637E+02	0.00126660
24	0.8066050410E+01	0.7621053159E+01	0.1109691942E+02	0.00122918
25	0.8140277267E+01	0.7112063944E+01	0.1080951285E+02	0.00119734
26	0.8219032049E+01	0.6645346344E+01	0.1056944251E+02	0.00117075
27	0.8280507207E+01	0.6211694837E+01	0.1035142267E+02	0.00114660
28	0.8321338415E+01	0.5796774983E+01	0.1014136446E+02	0.00112333
29	0.8340290427E+01	0.5389767289E+01	0.9930258632E+01	0.00109995

APPENDIX F.

WAVEFORMS ANALYSIS FOR SINGLE PHASE SYSTEM

RESULT FROM THE EMTP

Voltage Waveforms of SVC

Figure 2.8, shows the voltage waveform of the secondary winding of the transformer are nonsinusoidal. This is caused by the nonsinusoidal SVC current.

Instead of study all three phases, phase 'AB' is chosen as an example.

From the design	B_{AB}	=	0.029	p.u.
Choose	B_C	=	0.109	p.u.
Then	B_L	=	-0.109	p.u.

(Refer to Ch.II, p.14)

The base impedance of the circuit = 7.0533 ohms

Therefore,

The capacitance of the SVC = 41.12 microfarads

The inductance of the SVC = 171.34 millihenries

(Refer to Ch.II, p.25

To observe the waveforms of interest, 0.001 ohm sensing resistors are inserted to the circuit.

Between bus A-3A and bus A-4A for the SVC current

bus A-9A and bus A-3A for the line current

According to the EMTP rules, the antiparallel thyristor must be separated. Therefore, 0.001 ohm resistors are also inserted between the thyristor.

Between bus A-5A to A-7A

bus A-8A to A-3B

Since the resistors have the very small value resistances; their effects to the currents and voltages in the circuit can be neglected.

For the grid signal, the SCR Q1 and SCR Q2 are trigged by using the pulse signals, namely GATE1 and GATE2. The starting time of GATE1 is 0.675 milliseconds(which corresponds to 14.58 degrees of the input voltage) and the starting time for GATE2 is 9.009 milliseconds(which corresponds to 194.58 degrees of the input voltage). The pulse width is 1.0 milliseconds. The periods of both grid signals are 16.7 milliseconds(corresponds to 180 degrees of the input voltage). The amplitude of the pulse signals are 1.0 volt. Therefore, the signals waveforms are shown in Figure 2.9.

In order to reduce the oscillation, the R-C series branch (Snubber Circuit) is inserted in such a way that the R-C branch parallels the thyristors (between bus A-5A and A-3B). The resistance and the capacitance calculation are made by considering the steady state current through the thyristors and assume that the current through the resistor is one-tenth of the steady state current.

Choose the time constant equal 5 milliseconds.

By calculation,

The current through the thyristors	= 75.1808	amps.
The current through the resistor	= 0.10*75.1808	amps.
	= 7.51808	amps.
The resistance	= 2600	ohms.
The time constant	= 5 milliseconds.	
The capacitance	= 1.9425 microfarads.	

The complete studied circuit is shown in Figure 2.10.

Because of the high resistance and the small capacitance added to the circuit, the currents and the voltages of the circuit are not significantly changed.

From the EMTP output of this data case (Data Case D1), the steady state interested in are :

Voltage A-1A to GND	= 6.929 -0.0016	KV
Voltage A-2A to GND	= 6.176 -8.3462	KV
Voltage A-3A to GND	= 2.354 -8.7756	KV
Voltage A-9A to GND	= 2.354 -8.7796	KV
Line current from A-9A to A-3A	= 0.3145 -40.6488	KA

Bus Voltage and Line Current of phase A

The purpose of the static vars compensator is to correct the power factor and control the transmission voltage at a given terminal.

Consider load (bus A-3A to ground), from Appendix E Data

Case E1, steady state printout.

Load consumes real power (P) = 0.3142822E+06 Watts

reactive power (Q) = 0.2358231E+06 Vars

Therefore,

Power factor of load = $\cos(\tan^{-1}(Q/P))$

= 0.8

Consider the Static Vars Compensator

the capacitor in SVC consumes reactive power = -0.401705E+05 Vars.

(bus A-4A to ground)

the inductor in SVC consumes reactive power = 0.1049330E+01 Vars.

(bus A-4A to A-5A)

the resistor (0.001 ohms) between bus A-3A and A-4A consumes real power = 0.587517 Watts.

Therefore,

The net real power at bus A-3A = 314,282.7875 Watts.

The net reactive power at bus A-3A = 195,653.6493 Vars.

The new power factor at bus A-3A = $\cos(\tan^{-1}(Q/P))$

= .8489

The power factor may be increased by delaying the firing angle (i.e., decrease the magnitude of the inductive current).

VOLTAGE ACROSS THE INDUCTOR (A-4A to A-5A)

At 0< t <(0.000675) (corresponds to 0 to 14.58 degrees)

SCR Q1 and Q2 are not turned on because Q1 is not trigged and Q2 is reversed bias. Although the R-C branch is parallel to the SCR's, the resistance and the capacitance are very high. Therfore, the current in the R-C branch are negligible. The voltage across the inductor in this time interval is zero.

At t = 0.000675 seconds (corresponds to 14.58 degrees)

SCR Q1 is trigged. The current begins to flow through the inductor and the voltage across the inductor jumps up to be equal to the load voltage instanteneously (neglect the resistor between bus A-3A to A-4A). At the same time, the voltage across the SCR's drop to zero. This means the R-C branch(which parallels to the SCR) is short-circuited. The capacitor discharges the current and causes the transient oscillation in the waveforms. The time constant of the transient oscillation is equal to 5 milliseconds.

At this time, (t = 0.000675 seconds)

the voltage across the inductor = 2.354Cos(14.58-8.7756)

= 2.342 KV

The inductor current lags the inductor voltage by 90

degrees. So, the current flows from bus A-4A to bus A-5A. But the current can not flow through the SCR because the current cannot flow from the cathode to the anode and Q2 is off.

Therefore the current must flow through the R-C branch instead; which causes the transient oscillation in the current waveform of the inductor. The voltage across the inductor follows the load voltage until t = 0.004573 seconds.

At t=0.004573 seconds (corresponds to 98.7756 degrees)

The SCR Q1 begins to reverse bias; Q1 shut off. But the inductor current cannot change instanteneously. So, there is a small current flows through the thyristor for a short period of time, then decreases to zero. The voltage drops to zero instanteneously. The oscillation occurs because of the R-C branch. The inductor voltage remains zero until t = 0.009009 seconds.

At t = 0.009009 seconds (corresponds to 194.58 degrees)

the SCR Q2 is trigged; Q2 is on. The inductor voltage is equal to the load voltage until t = 0.01707 seconds.

At t = 0.01707 seconds (corresponds to 368.7756 degrees)

SCR Q2 begins to reverse bias. But the inductor current cannot change instanteneously. So the thyristor still short circuit for a short period of time, then turns off. The inductor voltage drops to zero an oscillates because of the R-C branch until the next cycle begins. The voltage waveform

of the inductor from bus A-4A to A-5A is shown in Figure 2.11.

CURRENT THROUGH THE INDUCTOR

At 0< t <0.000675 seconds (corresponds to 14.58 degrees)

SCR Q1 and Q2 are off. Theoretically, the inductor current should be zero. In fact, a small current through the inductor is detected because the R-C branch is parallel to the thyristors. This small value current decreases because the slope of the voltage across the inductor decreases, in this time interval, until t = 0.000675 seconds.

At t = 0.000675 seconds (corresponds to 14.58 degrees)

SCR Q1 turns on. The current flows from bus A-3 through the inductor to GND. Because of the inductor, the current cannot change instanteneously; the current rises up until it reaches the steady state (which corresponds to the voltage waveform across the inductor) until t = 0.004573 seconds.

At t = 0.004573 seconds (corresponds to 98.7756 degrees)

SCR Q1 begins to reverse bias; SCR Q1 tries to shut off. Because The inductor current cannot change instanteneously, the current decreases to zero.

At 0.004573< t < 0.009009 seconds

Both SCR Q1 and Q2 are off. The small current flows through the inductor because of the R-C branch. The small value current flows through the inductor, the resistor, and the capacitor to GND until t = 0.009009 seconds.

At t = 0.009009 seconds

SCR Q2 is trigged. Then, process is repeated but in the opposite polarity.

The waveform of the current through the inductor is shown in Figure 2.12.

VOLTAGE ACROSS SCR (bus A-4A to GND)

From the EMTP output, the voltage across bus A-3A to GND

$$V_{A-3A \text{ to } GND} = 2.353956\text{Cos}(\ t-8.7764)$$

SCR Q1 was trigged at t = 0.000675 seconds

SCR Q2 was trigged at t = 0.009009 seconds

At time 0<t<0.000675 seconds (corresponds to 14.58 degrees)

Both SCR are off.

The voltage across SCR = The voltage at bus A-3A to GND

Since the R-C branch parallels to the SCR's; there is a small value current flowing from bus A-5A to A-4A passing through the R-C branch to GND.

At t = 0.000675 seconds (corresponds to 14.58 degrees)

SCR Q1 is trigged. The voltage across SCR drops to zero instanteneously and remains zero until t = 0.004573 seconds.

At t = 0.004573 seconds (corresponds to 98.7764 degrees)

SCR Q1 begins to reverse bias. But the current flows through the SCR because the inductor current can not change

instanteneously. The SCR still be on for a short period of time and then shut off.

At 0.004573< t <0.009009 seconds

Both SCR's are shutted off because SCR Q1 is reversed bias and SCR Q2 is not trigged. Therefore, the voltages across SCR's jump back to be equal to the load voltage. The oscillation that occurs on the waveforms is caused by the R-C branch. When the SCR's are reversed bias, the current flows from bus A-4A to GND (which is small current) by passing through the R-C branch. The current in the R-C branch changes instanteneously from zero to a small value. The voltage across the capacitor cannot change instanteneously. Therefore, the transient oscillation occurs on the waveforms (Figure 2.13).

At t = 0.009009 seconds

SCR Q2 is trigged; SCR Q1 is off. The process is repeated, but in the opposite polarity.

VOLTAGE ACROSS THE CAPACITOR

Consider the circuit in Figure 2.3.

$$V_{A\text{-}6A \text{ to GND}} = V_{A\text{-}3A \text{ to GND}} - V_{A\text{-}3A \text{ to } A\text{-}5A} - V_{A\text{-}5A \text{ to } A\text{-}6A}$$

We can neglect $V_{A\text{-}3A \text{ to } A\text{-}5A}$ and $V_{A\text{-}5A \text{ to } A\text{-}6A}$ can be neglected because of the small resistances comparing to the impedance of the capacitor.

$$V_{A\text{-}6A \text{ to GND}} = V_{A\text{-}3A \text{ to GND}}$$

From the waveforms, the magnitude of $V_{A-6A \text{ to } GND}$ almost equal to the magnitude of $V_{A-3A \text{ to } GND}$, the phase angle of $V_{A-6A \text{ to } GND}$ lag the phase angle of $V_{A-3A \text{ to } GND}$ 3 degrees.

The waveform of the capacitive voltage is shown in Figure 2.7.

Compare between Figure 2.8 and Figure 2.14, both waveforms are nearly identical due to the very small resistors (bus A-3A to bus A-4A).

CURRENT THROUGH THE SVC BRANCH (Bus A-3A to A-4A)

Figure 2.15 shows that the current is nonsinusoidal. this means the harmonic current is generated.

From Figure 2.14, the voltage waveform across the capacitor, consider the equation:

$$i_c(t) = dv_c(t)/_{dt}$$

The capacitive current can be solved by the above equation.

Therefore,

Neglect the snubber branch (the very high resistance and high capacitance).

the SVC current = the inductive current and the capacitive current

The current waveform of SVC is shown in Figure 2.15.

APPENDIX G.

FORMAT OF THE FOURIER ANALYSIS

FORMAT OF THE FOURIER ANALYSIS IN THE EMTP

In order to study the harmonic current, Fourier Analysis is introduced. The EMTP provides the routine for finding the Fourier Coefficients of the voltages and the currents. Following the blank card ending node voltage request card, the Fourier Analysis cards are inserted. The rules for using the Fourier Analysis follow below:

col.3-12	FOURIER ON
col.13-24	left blank.
col.25-32	number of the harmonics which are to be printed. If left blank, 30 values will be printed.

The next card is the plot cards, each of which identifies one EMTP variable and a time window over which the Fourier Analysis is to be performed.

col.1-2	punch "1" in col.2, ask with all plot cards.
col.3	punch "4","8", or "9" depending upon whether one is to analyze a node voltage, a branch voltage or a branch current, respectively.
col.4	code number indicating which units are desired for time parameters HPI, HMIN, and HMAX below. For the power frequency punch "2".
col.5-7	left blank (use the 16 column-width

	precision).
col.8-11	left blank.
col.12-15	left blank.
col.25-30	"BUS1", first A6 EMTP variable name.
col.31-36	"BUS2", second A6 EMTP variable name, if any. For Fourier Analysis of a node voltage, only BUS1 is used, otherwise, BUS2 is also used.

The next card is the extension card for floating-point fields. The program will read this additional card, from which it will extract the five variables (HPI, HMIN, HMAX, VMIN, VMAX).

col.1-16	use "1.0" for the study cases.
col.17-32	the initial point for Fourier Analysis.
col.33-48	the final point for Fourier Analysis.
col.49-64	left blank.
col.65-80	left blank.