AN ABSTRACT OF THE DISSERTATION OF

Coral Cotto-Negrón for the degree of Doctor of Philosophy in Public Health presented on September 24, 2019.

Title: Bystander Intervention to Prevent Sexual Violence: Evaluation of the Theory of Planned Behavior and the Effectiveness of an Intervention Developed for College Students.

Abstract approved:

_____

Jessica R. Gorman

The prevalence of sexual violence among the college student population has become a significant public health issue. The real magnitude of the problem is unknown since most students do not report incidents of sexual violence. However, some studies have estimated that 1 in 5 students experience sexual violence while in college. Multiple efforts have been implemented to include more funding to investigate the drivers of sexual violence perpetration, experiences of victimization, and development of prevention efforts. The bystander intervention strategy for sexual violence prevention is a promising approach for changing the culture of violence on college campuses. The bystander model makes the community part of the solution by encouraging students to intervene in situations where they see a risk of violence. Although there have been some research developments in understanding bystander behaviors, there are gaps in the use of behavioral frameworks to predict bystander behaviors and evaluate bystander intervention programs. This study has two aims: (1) To examine if the theory of planned behavior (TPB) is a good framework for predicting bystander intervention behaviors to prevent sexual violence among college students; (2) To examine if a bystander intervention program to prevent sexual violence is effective in increasing bystander intervention behaviors, bystander positive attitudes and subjective norms about intervening, increasing bystander perceived behavioral control, decreasing rape myths, and increasing intentions to intervene.

I used a quasi-experimental design with a comparison group and an intervention group. A convenience sample of students was invited to participate in the study. I utilized a modified version of the SABBQ questionnaire to measure the TPB proximal variables and bystander behaviors. The final study sample was of 870 participants who completed the pretest, and 302 who completed both the pretest and a three-month follow-up. To evaluate the first aim, I used a path analysis to model the TPB proximal variables' influence on bystander behaviors. To evaluate the second aim, I used analysis of variance and regression analysis to explain group differences and associations between predictors of the Theory of Planned Behavior and bystander intervention behaviors. The results of this study provided evidence of a good model fit and showed that students' attitudes towards intervening, perceived behavioral control, subjective norms, and intentions predict bystander behaviors. The model provides evidence of the role of attitudes in influencing intentions to intervene. Overall, the intervention did not have a significant effect when compared to the comparison group. The results of this study revealed that the intervention had some effects immediately post-intervention. Gender differences in TPB predictors at pre-intervention were also found. These results support the development of bystander intervention programs that address the characteristics of student subpopulations and indicate critical areas for future research. I discuss opportunities to intervene experienced by students, the role of alcohol, types of experiences where students intervene, and gender differences related to bystander behaviors.

Bystander Intervention to Prevent Sexual Violence: Evaluation of the Theory of Planned Behavior and the Effectiveness of an Intervention Developed for College Students.

by
Coral Cotto-Negrón

A DISSERTATION

submitted to

Oregon State University

in partial fulfillment of
the requirements for the
degree of

Doctor of Philosophy

Presented September 24, 2019
Commencement June 2020

Doctor of Philosophy dissertation of Coral Cotto-Negrón presented on September 24, 2019

APPROVED:

Major Professor, representing Public Health

Head of the School of Social and Behavioral Health Sciences

Dean of the Graduate School

I understand that my dissertation will become part of the permanent collection of Oregon State University libraries. My signature below authorizes release of my dissertation to any reader upon request.

Coral Cotto-Negrón, Author

ACKNOWLEDGEMENTS

This work would not have been possible without the support of the Prevention and Wellness team at Oregon State University Student Health Services. I am especially thankful to Michelle Bangen and Robert Reff for their commitment to students and for believing in the work to prevent sexual violence on college campuses. I want to thank the research team of this project for their support and valuable time: Victoria VandeLinde, Aurora Cotto, and Rebecca Low.

I could not have done this work without the commitment and support of dedicated faculty members at the College of Public Health and Human Sciences. I want to thank Peggy Dolcini and Joe Catania for believing in me and providing me with learning opportunities outside the classroom, as well as being great advisors for my academic and career decisions. I also want to thank Daniel López Cevallos and Cynthia Mojica for taking the time to advise on this and other projects and for being available to support me. I also want to thank Alan Acock, John Geldhof, and Todd Little for advising on this project in different capacities.

I want to thank Jessica Gorman for her support and flexibility. She took on the role as chair of my committee when this project had already started and has been a key motivator and mentor. She helped me persevere, believe in myself, and find the motivation to complete this project.

I am very grateful to my family and friends for their support and sacrifice. They have been with me from the beginning, believing in me, and keeping me company on this journey. These fantastic people are Ada Negrón, Luis Cotto, René Cotto, Aurora Cotto, Aida Jimenez, Rafy Disdier, Angelica Ayala, Viviana Gonzalez, Fernando Velez, Erika Collazo, Karla Ostolaza, Frances Hernandez, Angel Vega, Meghan Fitzgerald, Whitney Schumacher, Mayra Bellido, Chris McFarland, and Matt Shuman.

Finally, I want to thank the person who supported the most, has cheered me on in the pursuit of this project, and has sacrificed the most: my love and partner, Rafael Disdier.

TABLE OF CONTENTS

LIST OF FIGURES

LIST OF TABLES

LIST OF APPENDICES

LIST OF APPENDIX FIGURES

LIST OF APPENDIX TABLES

CHAPTER 1: INTRODUCTION

Sexual violence on college campuses is an important public health issue. In recent years more prevention programs are abundant nationwide. This change has been possible by policies that provide resources to develop and implement prevention programs on college campuses and other requirements that shift the responsibility to institutions. These events have fueled the development of sexual violence prevention programs on college campuses. Research on the theoretical frameworks that drive interventions and the evaluation of their effectiveness are essential steps to understand how they can be useful in reducing the prevalence of sexual violence on college campuses.

The Significance of Sexual Violence Prevention on College Campuses

Sexual violence is experienced by millions of people around the world (Garcia-Moreno et al., 2006; Organization, 2013). The National Intimate Partner and Sexual Violence Survey State Report estimated that in the US, from 2010 to 2012, 1 in 3 women (36.3%) and 1 in 6 men (17.1%) had experienced some form of sexual violence during their lifetime (Smith et al., 2017). More than 70% of women who reported having experienced completed rape had their first victimization before they were 24 years old. In many cases (45%), an acquaintance was the perpetrator, and around 91% of the perpetrators were male. A recent survey estimated that from 2014 to 2015, 1 in 5 women, 1 in 14 men, 1 in 4 transgender students, and 1 in 3 bisexual students had an experience of sexual assault while in college (Krebs, Lindquist, Berzofsky, Shook-Sa, & Peterson, 2016). The prevalence of sexual violence varies among universities, states, year of survey implementation, and other factors. However, the real magnitude of sexual violence experienced by college students is unknown since approximately 85-90% of victims do not report (Fisher, Cullen, & Turner, 2000). One fact remains, a significantly high number of youth and young adults experience sexual violence.

The health impacts of sexual violence can be long-term and can increase health risk for the victims. Some of the physical consequences include unwanted pregnancies, chronic pain, gastrointestinal disorders, gynecological complications, sexually transmitted infections, cervical cancer, and genital injuries (Jewkes, 2002; Mcfarlane et al., 2005). The victims of sexual violence can experience immediate psychological trauma, including stress, anxiety, depression, and attempted or completed suicide (Littleton, Grills - Taquechel, & Axsom, 2009). The consequences of trauma experienced by college students, coupled with the stresses of their development as adults and the college experience itself can have significant ramifications for their academic and professional success. There is evidence that women who have experienced sexual assault are more likely to have a lower GPA (Baker et al., 2016; Jordan, 2011). Also, negative academic performance has been found associated with the severity of the sexually violent experience (Baker et al., 2016; Jordan, 2011).

Definitions of Sexual Violence

There is a lack of consensus among experts, policies, and institutions on the definition of sexual violence and how it should be measured. The definitions vary due to changes in culture, knowledge, and research. For example, from 1927 to 2012 the FBI's Uniform Crime Report Summary Reporting system (FBI UCR) used to define rape as "the carnal knowledge of a female, forcibly and against her will." In 2012, the FBI changed the definition of rape to "the penetration, no matter how slight, of the vagina or anus with a body part or object, or oral penetration by a sex organ of another person, without the consent of the victim." The new definition acknowledges that not all victims are female being inclusive of male and transgender survivors, and those who identify outside of the gender binary, and specifies that all people involved need to consent to any sexual act. However, the new definition does not acknowledge other forms of sexual violence, including sexual harassment and touching without penetration.

In 2002, the CDC published a report establishing their definition of sexual violence as

> a sexual act that is committed or attempted by another person without freely given consent of the victim or against someone who is unable to consent or refuse. It includes forced or alcohol/drug facilitated penetration of a victim; forced or alcohol/drug facilitated incidents in which the victim was made to penetrate a perpetrator or someone else; nonphysically pressured unwanted penetration; intentional sexual touching; or non-contact acts of a sexual nature. Sexual violence can also occur when a perpetrator forces or coerces a victim to engage in sexual acts with a third party. (Basile, Smith, Breiding, Black, & Mahendra, 2014).

This definition includes multiple acts of sexual violence and acknowledges the role of alcohol and other drugs in giving or asking for consent.

The Clery Act, the federal law enacted in 1990 requiring colleges to disclose their campus crime statistics, defines sexual assault (sexual offenses) as “any sexual act directed against another person, without the consent of the victim, including instances where the victim is incapable of giving consent” (U.S. Department of Education, Office of Postsecondary Education, 2016). This definition of sexual assault includes rape, fondling, incest, and statutory rape. This definition of sexual assault is very similar to the definition of sexual violence provided by the CDC. However, the Clery Act utilizes more specific definitions defined by the Violence Against Women Act (VAWA) of 1994 and the FBI UCR, to facilitate classification of offenses. Higher education institutions, colleges, and universities may decide to use other definitions for their own student conduct policy purposes, but for classification and to count incidents, they are obligated to use the definitions specified by the Clery Act.

In the current study, the definition used for sexual violence is CDC's definition of sexual misconduct, which is the same definition utilized by the institution where this study took place. They define sexual misconduct as “sexual harassment, non-consensual sexual contact, non-consensual sexual intercourse, non-consensual sexual activity, sexual exploitation, intimate partner violence, and stalking” (Oregon State University, 2017).

Policies that Promote Bystander Intervention to Prevent Sexual Violence on College Campuses

In response to the prevalence of sexual violence college students have experienced, some policies have been implemented to ensure that there are guidelines to deal with the sexual violence epidemic on college campuses. There are three essential pieces of legislation that have impacted how colleges approach sexual violence, and some of which are under review by the current US federal administration: Title IX, Campus Security Act, and the Clery Act.

The Title IX of the Education Amendments of 1972 ("Title IX"), 20 U. S. C. §§ 1681 et seq., states that an institution that receives federal funds "must ensure that no student suffers a deprivation of her or his access to educational opportunities on the basis of sex." The Office for Civil Rights (OCR), stated, in a "Dear-Colleague Letter" on April 24, 2011, that sexual harassment of students, including acts of sexual violence, is a form of discrimination prohibited by Title IX (Ali, 2011). In this letter, the OCR defined sexual violence as

> physical sexual acts perpetrated against a person's will or where a person is incapable of giving consent due to the victim's use of drugs or alcohol. An individual also may be unable to give consent due to an intellectual or other disability. Some different acts fall into the category of sexual violence, including rape, sexual assault, sexual battery, and sexual coercion. All such acts of sexual violence are forms of sexual harassment covered under Title IX."

The letter provided guidance on the steps to be taken by schools, including post-secondary education institutions like colleges. In addition to the guidance, for full compliance with Title IX, the letter provided guidance for "proactive measures to prevent sexual harassment and violence." In the letter, the OCR recommended schools that implement preventive education programs, including (1) orientation programs for new students, faculty, staff, and employees; (2) training for students who serve as advisors in residence halls; (3) training for student-athletes and coaches and members of student organizations; and (4) school assemblies and "back to school nights." In a second letter, from April 29, 2014, the OCR provided guidance of the enactment of Title IX and sexual violence, including recommendations on the topics to be covered by training

offered to students, including “strategies and skills for bystanders to intervene to prevent possible sexual violence” (Lhamon, 2014).

The Campus Security Act of 1990 (Title II of Public Law 101-542), requires all postsecondary institutions participating in the Title IV student financial assistance programs of the Higher Education Act of 1965, to disclose campus crime statistics and security information. In 1998, the law was renamed Jeanne Clery Disclosure of Campus Security Policy and Campus Crime Statistics Act, or Clery Act, in name of a student who died in 1986 in her dorm room. In 2013, the Violence Against Women Reauthorization Act (Public Law 113-14) included amendments to the Clery Act, known as the Campus Sexual Violence Elimination Act, or Campus SaVE. These amendments required institutions to disclose statistics, policies, and programs related to dating violence, domestic violence, sexual assault, and stalking, among other changes. These changes also added some requirements for colleges, which include implementation of primary prevention and awareness programs to prevent dating violence, domestic violence, sexual assault, and stalking.

The Clery Act requires all colleges and universities that receive federal funding to report crime statistics and efforts to improve campus safety every October 1st. This report includes criminal offenses (i.e., forcible sex offenses, rape, fondling, and statutory rape) and Violence Against Women Act (VAWA) offenses (i.e., domestic violence, dating violence and stalking). In 2015, there were 14,726 VAWA offenses and 16,918 criminal offenses reported by institutions in the United States. Oregon institutions reported 344 VAWA offenses (2% of all cases reported) and 192 criminal offenses (1% all cases reported), related to sexual violence. From 2014 to 2016, Oregon State University-Corvallis Campus, the university where this current study is implemented, reported 51 cases of rape, 30 cases of fondling, 2 cases of statutory rape, 20 cases of domestic violence, 14 cases of dating violence, and 83 cases of stalking (Oregon State University, 2017).

The Clery Act, specifies that primary prevention programs are intended to

> stop dating violence, domestic violence, sexual assault and stalking before they occur through the promotion of positive and healthy behaviors that foster healthy, mutually respectful relationships and sexuality, encourage safe bystander intervention, and seek to change behavior and social norms in healthy and safe directions.

The Clery Act specifically instructs colleges to provide primary prevention programs for all incoming students and new employees. The institutions must provide programs that describe bystander intervention strategies and information on risk reduction. The Clery Act defines bystander intervention as the "safe and positive options that may be carried out by an individual or individuals to prevent harm or intervene when there is a risk of dating violence, domestic violence, sexual assault or stalking," including "recognizing situations of potential harm, understanding institutional structures and cultural conditions that facilitate violence, overcoming barriers to intervening, identifying safe and effective intervention options; and taking action to intervene" (U.S. Department of Education, Office of Postsecondary Education, 2016). The educational institution can determine the appropriate strategies to include in their training based on the needs of their communities.

All the current pieces of legislation that promote sexual violence prevention on colleges campuses have called for the use of bystander intervention education and training as one of the leading prevention strategies. These policies have been effective in increasing sexual violence prevention research and funding for prevention programs on college campuses. However, there have been some recent changes in the policy mandates that may affect the current trends.

On September 2017, the Secretary of the United States Department of Education eliminated the OCR guidance letters of April 4, 2011, and April 29, 2014, and replaced them with new interim guidance on how to investigate cases of sexual misconduct (*Q&A on Campus Sexual Misconduct*, 2017). The new interim guidance states that the Department of Education will "engage in rulemaking on the topic of sexual harassment and sexual violence." This guidance is

focused on the management of cases of sexual violence, and not on the preventive aspects of the previous letters. Due to the elimination of the two letters, compliance with Title IX regulations could dwindle. However, these changes do not affect the requirements under the Jeanne Clery Disclosure of Campus Security Policy and Campus Crime Statistics Act (Clery Act), that requires colleges to provide primary prevention of sexual violence to all new students and report it.

Bystander Intervention to Prevent Sexual Violence on College Campuses

The bystander intervention strategy for sexual violence prevention is a promising approach in changing the culture of violence on college campuses (DeGue et al., 2014; Jouriles, Kleinsasser, Rosenfield, & McDonald, 2016; Katz & Moore, 2013). A bystander is a witness of a potential or actual misconduct, emergency, crime, or high-risk situation, who is not the perpetrator or the victim. The definition, in the case of sexual violence, considers a bystander as someone who has the opportunity to intervene in the presence of a potential or actual sexually violent situation that is being experienced and perpetrated by others. Thus, the bystander model makes the community part of the solution by centering sexual violence prevention on the bystanders, and their ability to act before, during or after situations where they notice a risk of violence.

Researchers have identified areas where students can intervene and have an impact on sexual violence prevention (McMahon & Banyard, 2012). Banyard et al. (2004) proposed a bystander intervention model based on the premise that by transforming broader community social norms and engaging more people sexual violence can be prevented.

The main proponents and researchers of the bystander intervention model (Banyard et al. 2004), to engage people to intervene to help others, were Latané and Darley (1970). These authors studied what motivates bystanders to intervene, who intervenes, and in which context bystanders intervene, although not specifically related to sexual violence. They found that norms had a significant impact on bystander intervention. The subjective norms, perceptions of what

others close to the person or a group think about intervening or not, may be situation-specific and affected by students' attitudes towards the person in need, as well as norms specific to their own culture. They also explored how the responsibility of intervening can be diffused in large groups of people, with bystanders being less likely to help due to their expectation that someone else would intervene. From this research, Latané and Darley (1970) described a situational model of multiple stages, where individuals decide to intervene or not in a situation where someone needs help. The model establishes that before intervening, the bystander needs to identify the event, assess if intervening is warranted, take responsibility for the intervention, decide what the best approach to intervening and take action is. If the bystanders were able to go through these steps without encountering any barriers, then they would intervene. The situational model of bystander intervention has been utilized by other researchers as a framework and adapted to sexual violence prevention strategies (V. L. Banyard, 2011; Burn, 2009).

Bystander intention to intervene has been found to be positively associated with bystander behaviors (Brown, Banyard, & Moynihan, 2014). Bystander behaviors are those actions taken by a witness of an actual or potential sexually violent situation to help the victim. These behaviors can be done before, during, or after an event. For example, if a bystander witnesses a person being taken away from the group by someone with negative intentions and identifies there is an opportunity to intervene then that is a pre-assault opportunity. If the bystander intervenes to prevent a potential assault that is what we refer to as a bystander intervention behavior or bystander behavior. Students may overestimate their intention to intervene in situations that they have not experienced before and, once experienced, did not take action. Researchers have found that attitudes that disapprove of rape (Hahn, Morris, & Jacobs, 2016), perceived behavioral control to intervene (Hahn et al., 2016; Hoxmeier, Flay, & Acock, 2016), and peer norms that approve of intervening (Brown et al., 2014) are associated with increased bystander intention to intervene and bystander behaviors of college students over time

(McMahon, Peterson, et al., 2015). Also, bystanders that are more likely to intervene have lower acceptance of rape myths, a sense of responsibility for the situation, high self-efficacy to intervene, and have personally been or known a victim of sexual violence (V. L. Banyard, 2008; Burn, 2009; McMahon, 2010). However, the relationship of these factors within a behavioral theoretical framework has not yet been tested yet, and the contribution of these factors collectively is understudied. Labhardt and colleagues (2017) did a literature review to identify factors associated to bystander intervention. They found that although the variables of the TPB are individually associated to bystander behaviors, these variables were not all measured in any of the studies included in the review.

Katz and Moore (2013) did a meta-analysis looking at the effects of sexual violence prevention programs in increasing bystander intervention related outcomes. They found that bystander intervention programs have provided evidence of moderate effects increasing bystander perceived behavioral control to intervene and bystander intentions to intervene, and small effects on bystander behaviors. Many of the bystander intervention programs implemented at colleges are not evaluated to identify their effectiveness to increase bystander intervention behaviors, and identify the intervention components necessary for it to be successful (L. A. Anderson & Whiston, 2005; V. L. Banyard, Moynihan, & Plante, 2007; DeGue et al., 2014; Katz & Moore, 2013; McMahon, 2015a; Shaw & Janulis, 2016). These components are explained in the first manuscript of this study. Evaluations are costly and time-consuming, which makes it an unfeasible feat to accomplish for many colleges that nevertheless, with limited resources, have developed programs for their students to be compliant with the federal mandate.

Description of bystander intervention program: Beavers Give a Dam

The program under evaluation in this study was developed to increase bystander intervention behaviors that prevent sexual violence situations before they happen with friends, acquaintances, or strangers. The program is a one-time intervention, delivered by both trained

staff and peer facilitators, in a setting outside the classroom and has a duration of 2 hours. The program is delivered to both single-sex and mixed participants. It was developed with the perspective that sexual violence is a symptom of larger systems of power, privilege, and oppression, not strictly limited to gender identity. There is a focus on the use of correct language, by promoting inclusiveness, gender-neutral language and acknowledging sexual violence has no bias, without undermining the groups that are most affected by it. Also, participants and facilitators identify victim-blaming language to discuss it throughout the program. The goal of this program is to empower potential bystanders to intervene if they witness a potential or actual sexually violent situation. The expected long-term impacts of this program are to increase student participation in sexual violence programs, increase the number of students reporting incidents of sexual violence to the university, reduce victimization rates and increase empathy and support of survivors (see Figure 1.1). The program has specific activities to address each of the outcomes of the intervention.

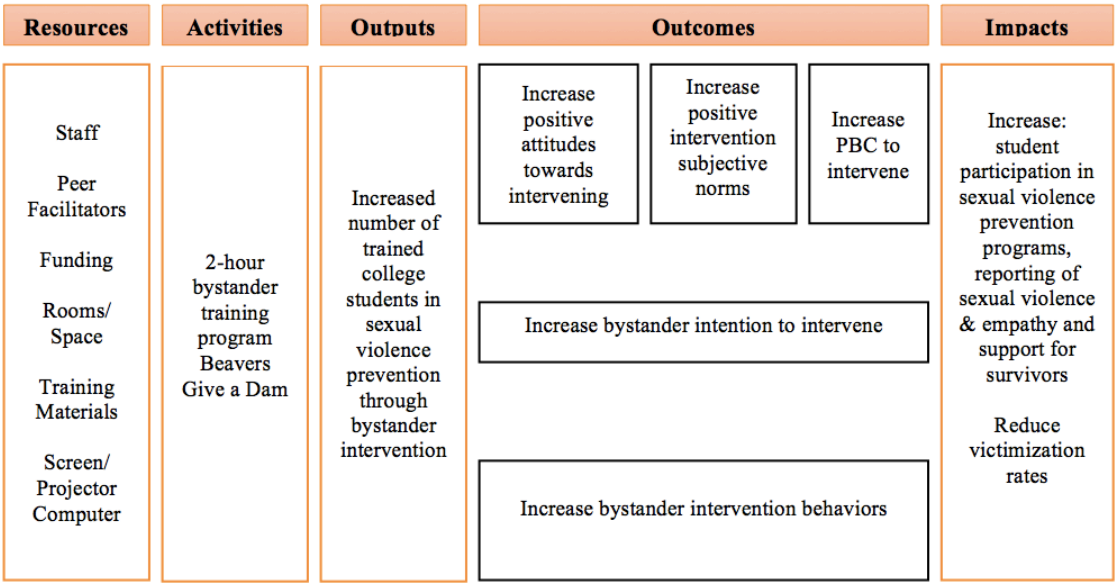

Figure 1.1. Logic model for Beavers Give a Dam sexual violence prevention program.

The program utilizes multiple passive, active and transformational learning strategies to change norms associated with students' perceptions about what others think about intervening;

give them strategies that can be utilized to intervene in different situations; change their attitudes towards bystander intervention and the myths associated with sexual violence victimization. In Table 1.1, the activities are associated to intermediary outcomes and their association to main outcomes. Each of the activities provided students with active discussions and introspection techniques that have been found in the literature to be the most effective approaches to increase intention to intervene and bystander intervention behaviors. The intermediary outcomes selected have been found to impact the constructs under the Theory of Planned Behavior by transforming attitudes, subjective norms, and perceived behavioral control towards intervening. By addressing each of these constructs in one intervention, the program intends to have a direct impact on students' intentions to intervene and increase bystander behaviors.

Table 1.1:

Description of BGAD Activities, Intermediary Outcomes, and Main Outcomes.

Activities	**Intermediary Outcomes**	**Main Outcomes**
Types of SV, Relationship of SV & AOD, Consent	Increase knowledge on SV dynamics	Increase positive attitudes towards intervening
Pop quiz, Reframing conversation	Dispel rape myths	Increase positive attitudes towards intervening
Values-based activities & discussions	Enhance students' sense of community	Increase positive attitudes towards intervening
Empower with skills, Assign responsibility	Increase motivation to help	Increase positive subjective norms towards intervening
Intervention styles/Practice	Develop skills and confidence to intervene	Increase perceived behavioral control towards intervening
Robbery analogy/If a survivor comes to you	Build empathy and support for survivors	Increase positive attitudes towards intervening
SARC	Highlight Campus and local resources	Increase perceived behavioral control towards intervening
Adapt program & community input	Address unique needs of various communities	Increase positive subjective norms towards intervening

Research Gap

There is a need for more research to understand the predictors of bystander behaviors to prevent sexual violence on college campuses and the effectiveness of bystander training programs to increase bystander behaviors, utilizing a theoretical framework, more robust evaluation designs, longitudinal data, and improved measures (Hoxmeier, Acock, & Flay, 2017; Labhardt et al., 2017; McMahon, 2015a). Most of the sexual violence prevention programs that have been evaluated and published do not explicitly utilize a strong theoretical framework (Labhardt et al., 2017), thus understanding the contributions of multiple factors on bystander behaviors is understudied, and even less their effects over time. Although there has been development in the literature of the use of the TPB to predict bystander behaviors, the structural relationship of bystander attitudes, subjective norms, perceived behavioral control and intentions with bystander behaviors has not been published. Understanding this structure is of vital importance to the efficient development of bystander prevention programs and the effect they will have in increasing bystander behaviors.

Some bystander prevention programs have robust evaluations (V. L. Banyard et al., 2007; Coker et al., 2015; McMahon, Winter, et al., 2015); although this is not the case of many programs implemented on college campuses (Katz & Moore, 2013). The federal mandate does ask universities to implement prevention programs and recommend bystander intervention training; however, the use of evidence-based programs is not specifically called out or required. Also, many universities are unable to implement these programs due to lack resources and partnerships with researchers and evaluators that could share knowledge and resources specific to the development, implementation, and evaluation of sexual violence prevention programs utilizing the bystander intervention model. Although the Office on Violence Against Women (OVW) of the Department of Justices (DOJ) has provided grants to universities to develop programs and assess the sexual violence experience of students, these awards are limited and

require participation in complex federal grant process. Thus, the development and evaluation of bystander behavior programs is a crucial step towards the dissemination of evidence-based programs, and to increase their reach to other colleges in the US. Of those bystander intervention programs that had been evaluated by Katz and Moore metanalysis in 2013, only around 25% included measures for bystander behaviors (Katz & Moore, 2013). Even when bystander behavioral measures are included in these evaluations, most contain an unbalanced mixture of bystander behaviors that occur before, during and after an assault, and that are perceived as high risk or low risk (V. L. Banyard et al., 2007; McMahon, Peterson, et al., 2015). Some studies have uncovered that considering and measuring these factors is essential to understand bystander behaviors (V. L. Banyard & Moynihan, 2011a; Hoxmeier et al., 2016; McMahon & Banyard, 2011), but their use in the evaluation of prevention programs are under research. The development of Sexual Assault Bystander Behavior Questionnaire (SABBQ) is a step towards a more comprehensive bystander measurement tool that considers these factors, although it is limited by only focusing on females as victims and perpetrators as men, as in other bystander measures (V. L. Banyard, 2008; Hoxmeier et al., 2016). Thus, the development of bystander measures that capture the predictors and experience of bystander behaviors for all genders and different sexually violent situations is an important step towards understanding bystander behaviors.

Study Purpose

The purpose of this research project is to predict bystander intervention behaviors using the Theory of Planned Behavior as a framework (TPB; Ajzen & Fishbein, 1980) and evaluate the effectiveness of a sexual violence prevention program for college students, Beavers Give A Dam (BGAD), utilizing this framework.

I have two aims to address the gaps outlined above. (1) To examine the Theory of Planned Behavior as a framework to predict bystander intervention behaviors to prevent sexual violence among college students. I hypothesize that the TPB is a good framework to predict bystander behaviors. This study provides evidence of factors relevant to the development of programming efforts. I utilized a modified version of the SABBQ that contains gender-neutral language and includes measures of bystander behaviors. In the construction of the scales, I utilized a parceling approach to account for the multidimensionality of the scales. (2) To examine whether the Beavers Give A Dam (BGAD) bystander intervention program is an effective strategy to increase bystander intervention behaviors, positive bystander attitudes and subjective norms about intervening, increasing bystander perceived behavioral control, decreasing rape myths and increasing intentions to intervene over time. Utilizing a theoretical framework like the TPB (Ajzen, 1985) to evaluate the effectiveness of BGAD to increase bystander intervention behaviors is vital to understanding the mechanisms that are necessary to target and assess the quality of the program implementation. The study provides evidence of areas of focus by prevention experts on college campuses.

This study provides evidence of the significant factors to address in bystander intervention education programs, and to advance the scientific knowledge of how we study this issue on college settings.

CHAPTER 2: MANUSCRIPT 1

The Theory of Planned Behavior as a framework for sexual violence prevention on college campuses.

Abstract

Objective: To examine if the Theory of Planned Behavior (TPB) is a good framework to predict bystander intervention behaviors to prevent sexual violence among college students.

Participants: This study utilized a sample of first-year college students. The final study sample was of 870 participants for the pretest data collection and 302 for the three-month follow-up.

Methods: A path analysis was utilized to model the influence of proximal predictors on bystander behaviors, following the TPB. The questionnaire utilized was the Sexual Assault Bystander Behavior Questionnaire Revised (SABBQ-R), developed specifically to test the constructs of the TPB.

Results: The results of this study provided evidence of a good model fit and showed that students' attitudes towards intervening, perceived behavioral control, subjective norms, and intentions predict bystander behaviors.

Conclusions: The Theory of Planned Behavior is a good framework to understand key proximal variables influencing bystander behaviors and guide the development of intervention programs to increase students' actions when witnessing sexual violence.

Introduction

Millions of people experience sexual violence around the world (Garcia-Moreno et al., 2006; Organization, 2013). A recent survey estimated that from 2014 to 2015, 1 in 5 women, 1 in 14 men, 1 in 4 transgender students, and 1 in 3 bisexual students had an experience of sexual assault while in college (Krebs et al., 2016). The prevalence of sexual violence varies between universities, states, year of survey implementation, and other factors. However, the real magnitude of sexual violence experienced by college students is unknown since approximately 85-90% of victims do not report (Fisher et al., 2000). The health impacts of sexual violence can be long-term and can increase health risk for the victims (Jewkes, 2002; Mcfarlane et al., 2005). The literature on sexual violence on college campuses addresses layers of a very complex area of study that stretches from federal to campus policy, gender-related issues, power dynamics, politics, religion, crime, violence, and other factors that have shaped the experience of college students in campus settings. The bystander intervention model of prevention is an effective strategy to engage the community in the prevention sexual violence (Anderson, 2001; DeGue, 2014; Jouriles, Krauss, Vu, Banyard, & McDonald, 2018; Katz & Moore, 2013).

Bystander Intervention as a Campus Wide Prevention Strategy

A bystander is a witness of a potential or actual misconduct, emergency, crime, or high-risk situation, who is not the perpetrator or the victim. In the case of sexual violence, a bystander is someone who has the opportunity to intervene in the presence of a potential or actual sexually violent situation that is being experienced and perpetrated by others. Thus, a bystander model makes the community part of the solution by centering sexual violence prevention on the bystanders, and their ability to act before, during or after situations where they notice a risk of violence. Many higher-education settings have embraced this model since it diverts the focus from the victims and the perpetrators and extend the prevention effort to peers and the broader community. Multiple studies have found that the bystander intervention strategy for sexual

violence prevention is a promising approach to change the culture of violence on college campuses (Brown et al., 2014; DeGue et al., 2014; Katz & Moore, 2013; McMahon, 2015b).

Bystander Intervention and the Theory of Planned Behavior

The proponents of the bystander model to prevent sexual violence have focused on the study of college students' experiences that would warrant an intervention (Hoxmeier et al., 2016; McMahon & Banyard, 2011) and what are barriers that prevent them from intervening (Burn, 2009; Latané & John M. Darley, 1970). These authors have identified areas were students are more likely to intervene (Hoxmeier et al., 2016; McMahon, Peterson, et al., 2015) and skills that could help them overcome barriers to intervene (V. L. Banyard & Moynihan, 2011a; V. L. Banyard, Plante, & Moynihan, 2004; Burn, 2009), like dispelling inaccurate peer norms and changing rape myths (Cares et al., 2015). Understanding the predictors of bystander behaviors can provide preventionists with a framework and areas to focus to initiate change. Researchers have found that attitudes that disapproving of rape (Hahn et al., 2016), perceived behavioral control to intervene (Hahn et al., 2016; Hoxmeier et al., 2016), and subjective norms that approve of intervening (Batson, 1994; Brown et al., 2014) are associated with increased bystander intention to intervene and bystander behaviors of college students (Jouriles et al., 2018; McMahon, Peterson, et al., 2015).These predictors are considered in the framework of the Theory of Planned Behavior, where proximal level factors predict individuals' behaviors. The basis of this theory is the prospect of cognitive self-regulation in the context of a dispositional approach for behaviors that are under volitional control (Ajzen, 1991; Fishbein & Ajzen, 1975). Thus, if given the opportunity and having the appropriate resources, paired with enough motivation or willingness, the behavior is performed. The TPB explains that for a behavior to be achieved, there needs to be both an intention to do that specific behavior and perceived control of that behavior. This intention to take action can be predicted from attitudes towards a behavior, subjective norms, and perceived behavioral control, as shown in Figure 2.1. The TPB has been widely used to

predict behaviors, including physical exercise, nutrition, sexual behaviors (Steinmetz, Knappstein, Ajzen, Schmidt, & Kabst, 2016), and more recently, bystander intervention behaviors (Hoxmeier et al., 2016).

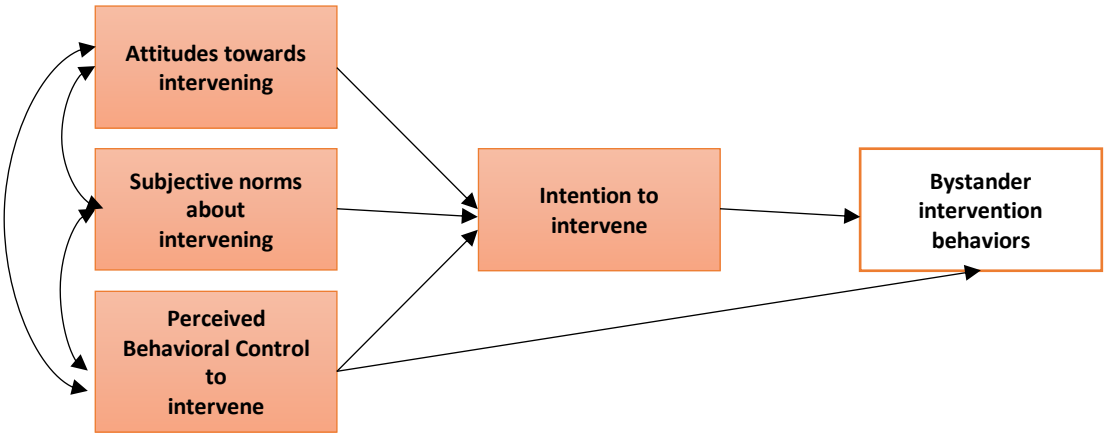

Figure 2.1. Diagram of the theory of planned behavior developed by Icek Ajzen.

Some researchers have started modeling bystander behaviors utilizing the Theory of Planned Behavior (TPB; Ajzen, 1985, 1991) as a theoretical framework, and using cross-sectional and longitudinal data with promising results (Hoxmeier et al., 2016; McMahon, Peterson, et al., 2015).

Bystander Attitudes Towards Intervening

Under the TPB, attitudes towards bystander intervention are associated with beliefs about the unfavorable or favorable appraisal of a specific behavior, however positive or negative the bystander perceives them. Negative attitudes towards intervening can be associated with previous experiences, patriarchal beliefs, and rape myths(Hayes, Abbott, & Cook, 2016; Lonsway & Fitzgerald, 1994). Rape myth attitudes are stereotyped views about sexual violence that assign the blame to the victim, normalize rape behavior, and excuse sexual assault (Burt, 1980). These negative attitudes are false beliefs used to justify sexual violence from men to women (Lonsway & Fitzgerald, 1994). Although sexual violence perpetrated by men against women is very prevalent, rape myths exist for people of any gender, beyond the usual binary definitions. These

negative attitudes influence a bystander's willingness to intervene and act when witnessing a sexual violence event (Cares et al., 2015).

Bystander Subjective Norms

Subjective norms are perceived social pressures and perceptions individuals have regarding their friends' beliefs, or the beliefs of those important to the person, about performing or not performing a behavior (Ajzen, 1991). Bystander subjective norms towards intervening influence bystanders' intent to intervene (Brown et al., 2014; Hoxmeier, 2015) and are associated with the likelihood of intervening in specific situations where the intervention of a bystander is desired (Hoxmeier, 2015; Aronowitz,2012). Previous research has found that students' perceptions of their peers' beliefs influence men's likelihood to intervene (Brown et al., 2014). Also, studies have found that norms have a significant impact on bystander intervention, making intervention dependent on whether the action is accepted or not by peers or people present (Latané & John M. Darley, 1970). The norms associated with the intervention may be specific to an experience (Hoxmeier et al., 2016) and affected by students' attitudes towards the person in need, as well as norms associated to their own culture (Latané & John M. Darley, 1970).

Bystander Perceived Behavioral Control to Intervene

Perceived behavioral control has been theorized to influence and predict a person's subjective degree of control to perform a specific behavior (Ajzen, 1991, 2002b; Bandura, 1986). Perceived behavioral control, is similar to Bandura's (1986) self-efficacy, in that an individual will take action if they have the confidence to intervene (Ajzen, 2002a). Some researchers have found that efficacy, and not control, is associated with intentions and behaviors (Trafimow, Sheeran, Conner, & Finlay, 2002), and others have found that self-efficacy measures are confounded with intentions, and that is why there is a stronger relationship with behavior than control (Rhodes, Blanchard, & Matheson, 2006). However, there is sufficient evidence of the relationship of perceived behavioral control and bystander behaviors (Langhinrichsen-Rohling,

Foubert, Brasfield, Hill, & Shelley-Tremblay, 2011; McMahon, Peterson, et al., 2015). Students who have reported intervening in the past also reported higher perceived behavioral control and greater intention to intervene in the future than those who did not intervene when they had the opportunity (Hoxmeier et al., 2016). Further, students who are confident in their ability to intervene are more likely to report intervention behaviors (Banyard, 2008).

Bystander Intention to Intervene

The TPB frames intention as the predecessor of behavior, where the person can perform the behavior if sufficiently motivated and willing to do so (Ajzen, 1991). Bystander intention to intervene refers to the self-reported willingness to intervene when the person witnessed a potentially high-risk or actual sexual violence situation. Bystander intention to intervene is influenced by rape myth attitudes, subjective norms, and bystander perceived behavioral control (Hoxmeier et al., 2016; McMahon, Peterson, et al., 2015). Bystander intention is a predictor of bystander behaviors if the person has positive attitudes towards intervening, high perceived behavioral control or positive subjective norms towards intervening (Ajzen, 1991; Latané & Darley, 1970). Victoria Banyard (2008) found evidence that intention to intervene was a predictor of future self-reported bystander behaviors.

Bystander Intervention Behaviors

Bystander intervention behaviors are those actions taken by bystanders to intervene in potentially high-risk or actual sexual violence situations. These interventions can happen before, during or after some sexual violence has occurred (McMahon et al., 2014). If a bystander notices the situation, identifies it as a potential opportunity to intervene, takes responsibility, and decides to intervene, they may choose to take action (Latané & John M. Darley, 1970). Any barrier in this process will potentially disrupt bystander intervention (Burn, 2009). Previous research has found that higher bystander intention to intervene and actual bystander behaviors are associated with being a woman and having participated in sexual violence prevention education, as well as if they

or someone they know had a previous experience of sexual violence (V. L. Banyard, 2008). These factors are concordant to the TPB model in that residual effects of past experiences may influence behaviors, although, these are attenuated if intentions are strong (Ajzen, 2002b). Also, intervening events may have an effect on intentions and perceived behavioral control in the future (Ajzen, 1991), since these previous experiences can shape future behaviors, thus these variables should be included in the analysis. Therefore, while considering these factors, if a student perceives to have control over the situation, has positive subjective norms and attitudes towards intervening, and consequently is willing to intervene, the student will take action (Ajzen, 1991; V. L. Banyard & Moynihan, 2011a; Latané & John M. Darley, 1970).

Research Gap

There is a need for more research to understand the predictors of bystander behaviors to prevent sexual violence on college campuses, utilizing a theoretical framework and improved measures of behaviors (Hoxmeier et al., 2017; Labhardt et al., 2017; McMahon, 2015a). The influence of attitudes, subjective norms and perceived behavioral control on intention should be considered within a framework of influence to be able to predict bystander behaviors (Labhardt et al., 2017). Most of the sexual violence prevention programs that have been evaluated and published do not explicitly utilize a strong theoretical framework (Labhardt et al., 2017), thus understanding the contributions of multiple factors on bystander behaviors is limited, and even less over time. This is the first study to use of the TPB to predict bystander behaviors, utilizing a structural relationship of bystander attitudes, subjective norms, perceived behavioral control and intentions. Understanding the predictors of bystander behaviors is of vital importance to the efficient development of bystander intervention programs and the effect they will have in increasing bystander behaviors.

Current Study

The purpose of the current study was to examine the Theory of Planned Behavior as a framework to predict bystander intervention behaviors to prevent sexual violence among college students.

Research Question 1. Do bystander intervention attitudes, subjective norms, perceived behavioral control, and intentions to intervene predict bystander behaviors?

Hypothesis 1. Bystander intervention attitudes, subjective norms, and perceived behavioral control predict intentions to intervene, and both intentions to intervene and perceived behavioral control predict bystander intervention behaviors.

Research Question 2. Do attitudes towards intervening, subjective norms, perceived behavioral control, and intentions to intervene predict bystander behaviors over time?

Hypothesis 2. Bystander's attitudes towards intervening, subjective norms, and increased perceived behavioral control predict bystander intentions to intervene at pre-test.

Hypothesis 3. Bystander intentions to intervene and bystander perceived behavioral control at pretest predict bystander intervention behaviors at 3-month follow-up.

Methods

Data Source and Sample

This study made use of data from a broader evaluation study that used a quasi-experimental design, with an intervention and comparison group of undergraduate students at Oregon State University (OSU). I used a non-probability convenience sample to recruit undergraduate first-year students. This research design was selected as appropriate for this study since there was no possibility for random assignment without disrupting the programed implementation of the intervention to students by university sexual violence personnel and health promotion educators. For both groups, a sample of students at Oregon State University (OSU) completed a questionnaire that included a modified version of the Sexual Assault Bystander

Behavior Questionnaire (SABB-Q; Hoxmeier, Flay, & Acock, 2016) demographic questions, and items related to participation and exposure to sexual violence prevention education, tools, and training.

In this study, I targeted students who were in their first year of college since they are at higher risk of experiencing sexual violence (Smith et al., 2017), and they are a primary target group for prevention programs on college campuses (Flack et al., 2008). The students in the intervention group were students who enrolled to participate in a sexual violence prevention intervention called Beavers Give A Damn (BGAD), developed by OSU sexual violence prevention experts. The comparison group was students who did not enrolled to participate in BGAD who were recruited from classrooms offering first-year introductory courses. Before data collection all BGAD facilitators and instructors played a video with information about the study and the online link to access the study questionnaire. All participants had a computer, tablet, or phone to complete the ~15-minute-long questionnaire. OSU Corvallis Campus was selected as the only location for the study, since at the time of the study BGAD was not implemented in any other sites. All students who participated in the study received an OSU lip balm or t-shirt, and those who completed the three-month follow-up received an incentive of $5 to their student account.

Data for pretest was collected in the fall term of 2017, and data for the 3-month follow-up was collected during the winter term of 2018. The pretest questionnaire was administered in-person in the classroom utilizing an online survey tool. The three-month follow up was administered online through an email invitation. All instruments and procedures were approved by the university's Institutional Review Board.

Students were included in the sample if they consented to participate in the study, were first-year students, and had not participated in BGAD in the past. Between both groups, 1,916 first-year students in total were invited to participate in the study. Students who were not first-

year students could participate but were not included in this study sample. A total sample of 870 eligible undergraduate students participated in the first round of data collection pretest and 302 in the 3-month follow-up, for 45% and 35% response rates, respectively. During the fall term of 2017, the total first-year undergraduate student enrollment at OSU was 3,778; thus, our study sample of 870 pretest and 302 at the 3-month follow-up represents 23.0% and 7.7% of the first-year population, respectively.

Study Variables

The questionnaire utilized in this study included questions on demographic characteristics, parents educational level, student group membership, participation in sexual violence prevention programs, party attendance, experience of sexual violence victimization, and a modified version of the Sexual Assault Bystander Behavior Questionnaire (SABB-Q ; Hoxmeier, Flay, & Acock, 2016).

Demographic characteristics. I asked students their age with “What is your age?” The five possible responses included “Under 18,” “18-19,” “20-21,” “22-23,” and “24+.” I also asked students about their gender by asking them, “What is your gender?” To improve inclusivity, I included the following possible responses: “Woman,” “Man,” “Non-binary,” “Trans-man,” “Trans-woman,” and “Other.” However, all students in the sample identified as “Woman” or “Man.” I asked students about their race/ethnicity by asking “What is your race/ethnicity?,” with response options of “White Non-Hispanic,” “Black or African American,” “Hispanic,” “American Indian or Alaska Native,” “Native Hawaiian or Pacific Islander,” “Asian American,” and “Other.”

Parents’ education level. I considered education level of the parents by asking students, "What is the education level of your father?" and "What is the education level of your mother?" Response options were "Less than high school," "High school graduate,” "Some college,” "Bachelor's degree,” and "Advanced degree.”

Student group membership. I asked students if they are members of a fraternity/sorority by asking, “Are you a member of a sorority/fraternity?” Students responded “Yes” or “No.”

Participation in and access to sexual violence prevention programs. To assess students’ eligibility to participate in the study and assess contamination of our data, I asked students about their participation in sexual violence prevention programs. I assessed if they had participated in BGAD in the past by asking, “Have you ever participated in “Beavers Give A Dam” (BGAD), OSU’s in-person bystander training program?” Responses options were “Yes,” “No,” or “I do not know.” To assess if students have received information about sexual violence prevention in the past I asked, “Has someone talked to you about the BGAD prevention program at OSU?” Responses options were “Yes, a friend,” “Yes, someone who works for the university,” “Yes, other,” and “No.” I also asked students about receiving information about sexual violence from other sources by asking the question “Have you received information or talked to someone about sexual violence prevention in the past?” Students could respond by selecting one or more of the following: “Yes, Haven (online program from OSU),” “Yes, OSU workshop,” “Yes, other programs, workshops or training. Which one?” “Yes, a friend,” “Yes, a relative,” “Yes, another person. Who?” and “No.” Finally, I asked students how often they saw sexual violence information online by asking, “How often do you see information about sexual violence prevention online?” Response options were “Never,” “Once a year,” “Monthly,” “Weekly,” and “Daily.”

Party attendance., I assessed party attendance since students who participate in parties, especially if alcohol is present, may have more opportunities to intervene than those who do not attend. I asked students, “How often do you attend parties where alcohol is present?” Responses

options were “Never,” “1-5 times a month,” “6-10 times a month,” or “More than ten times a month.”

Sexual violence victimization and perpetration. I asked students if they knew someone who has been a victim or perpetrator by asking “Do you know someone who has been a victim of sexual violence?” and “Do you know someone who has been a perpetrator of sexual violence?” Response options were “Yes” or “No.”

Measuring TPB predictors of Bystander Intervention Behaviors

I used a modified version of the Sexual Assault Bystander Behavior Questionnaire (SABB-Q ; Hoxmeier, Flay, & Acock, 2016) to assess the proximal outcomes of this study. The proximal factors to bystander intervention include bystander perceived behavioral control to intervene, attitudes towards intervening, subjective norms about intervening, intention to intervene, and bystander intervention behaviors.

Hoxmeier et al. (2015) validated this questionnaire in a sample of students from the same institution as this study. The scales were developed utilizing a contextual framework developed by McMahon and Banyard (2011), where they identified common bystander behaviors encountered by students in the college context. Hoxmeier (2015) selected the items that related to general sexual violence experiences (and not dating violence), and items of behaviors occurring before, during, and after sexual violence. As part of the validation process, the author performed cognitive interviews to assess the readability of the items. The scales had consistent reliability and demonstrated good fit and validity (Hoxmeier, 2015).

Below is the description of the scales that will be included in the survey instrument. The scale total mean scores were utilized. The reliability estimates (Cohen’s d) included were calculated for the revised version of SABBQ scales except for rape myth acceptance.

Bystander attitudes towards intervening. I asked if they found it unhelpful or helpful to take each of the 11 bystander behaviors, with a seven-point polar Liker-type scale from "Totally unhelpful" to "Totally helpful." The scale demonstrated high reliability of 0.91.

Bystander intent to intervene. Students were asked how likely they are to take action for each of the 11 bystander behaviors, with a seven-point Likert-type scale with anchors from "Totally unlikely" to "Totally Likely." The scale had a high reliability of 0.90.

Bystander subjective norms about intervening. Students were asked how much their friends would disapprove or approve if they took action in any of the 11 bystander behaviors, with a Likert-type scale from "Totally Disapprove" to "Totally Approve." The scale demonstrated high reliability of 0.92.

Bystander perceived behavioral control to intervene. Students were asked how difficult it would be to take action in each of the 11 bystander behaviors, with a seven-point Likert-type scale from "Very Difficult" to "Very Easy." The scale demonstrated high reliability of 0.90.

Bystander behaviors and opportunities to intervene. I asked students if they have encountered each of the 11 bystander behaviors. If students answered "Yes," they were asked about their response, with five possible answers "Did nothing, it wasn't my business," "Did nothing because I wasn't sure what to do," "Did something, confronted the situation directly," "Did something, went and got assistance from someone else," "Other (please specify)." For some analyses, I used a dichotomous variable that represented those who intervened and those who did not, of those that had the opportunity to intervene. The bystander behavior score was obtained by summing the number of behaviors they reported having done with a range of 0 to 11. Cronbach's alpha was 0.89.

Analyses

Data cleaning was done utilizing SPSS 24 and all quantitative data analyses on Stata 14. I performed a descriptive analysis of each proximal variable and bystander behaviors. To understand patterns of missing data, I analyzed patterns for all demographics, proximal, and outcome variables in the study for all time points. I analyzed if there was any group mean differences between participants with missing information and non-missing. Missing data analysis showed a very low percent of missing data in all the main outcome and explanatory variables, with only 11% of data missing. No significant differences were found for demographic and group variables ($p>0.05$).

For all the TPB variables a Cronbach's Alpha reliability was calculated following a principal component analysis (Appendix C) of each of the four subscales of the TPB, intention, perceived behavioral control, subjective norms, and attitudes for the 11 intervention behaviors. The total mean score was used to estimate each scale. I utilized parceling as a tool to estimate each scale to ensure a balanced model, reduce sample variability and consider the multidimensionality of each scale. This approach is considered to be an excellent model to reduce the magnitude of these sources of error and multidimensional scale (Little, 2013). The results of the analysis with the modified version of the scales provided higher reliability estimates than the original scale. I used Pearson's Correlation analysis to see how related the main scales were to each other. Descriptive statistics and Chi-square were utilized to study differences in primary outcomes, bystander intervention behaviors, and opportunities to intervene.

I used path analysis to test the relationship between outcomes. I modeled the TPB for each of the intervention groups independently and tested for invariance to establish if the intervention group influenced the model. The test of invariance between the two groups was not significant ($p<0.05$) for any of the parameters. The results of this analysis, including figures and invariance parameters results, can be found in the Appendix A.

To answer the first research question, I fitted the model utilizing the pretest total sample (n=870). Finally, to answer the second research question, I estimated a causal model at pretest proximal variables predicted behavior outcomes at 3-month follow-up, utilizing the subset of the sample that completed both waves of data collection (N=302).

Results

Sample Characteristics

The study sample at pretest was 18-19 years of age, with close to equal proportions of male and females, and mostly White. Most participants reported their parents had some college or higher. A higher proportion of students reported being members of a fraternity or sorority organization. Most of the students who participated in the pretest data collection reported being exposed every month to information on sexual violence prevention online (44.13%). The majority of participants, in both groups, reported knowing someone who was a victim of sexual violence (62.87%); however, only 24.60% reported knowing a perpetrator. The descriptive analysis of the pretest study sample can be found on Table 2.1. Students that did not participate in the 3-month follow up were more likely to be men χ^2 (1, n=870)= 24.73, p<0.001, be in a fraternity/sorority χ^2 (1, n=870)= 34.47, p<0.00, participate in parties more χ^2 (1, n=870)= 24.03, p<0.001, and reported less intervention behaviors (p<0.001).

Table 2.1

Study sample characteristics for participants that completed pretest and those who completed both pre- and 3-month follow-up.

	Pretest		Pre- & 3-month follow-up	
	n	%	n	%
N	870		302	
Age				
Under 18	26	2.99	9	3.00
18 - 19	844	97.01	293	97.00
Missing				
Gender				
Men	429	49.31	188	62.30
Women	441	50.69	114	37.70
Race-Ethnicity				
American Indian/Alaska Native	6	0.69	3	0.99
Asian	76	8.74	37	12.25
Black	24	2.76	6	1.99
Hispanic	76	8.74	3	0.99
Native Hawaiian/Pacific	12	1.38	5	1.66
White, Non-Hispanic	676	77.7	230	76.16
Education of the Father				
Less than high school	39	4.48	20	6.62
High school graduate	117	13.45	39	12.91
Some College	150	17.24	50	16.56
Bachelor's degree	352	40.46	112	37.09
Advanced Degree	208	23.91	80	26.49
Missing				
Education of the Mother				
Less than high school	28	3.22	16	5.30
High school graduate	77	8.85	24	7.95
Some College	180	20.69	56	18.54
Bachelor's degree	387	44.48	131	43.38
Advanced Degree	197	22.64	74	24.50
Missing				
Fraternity/Sorority Members				
Yes	513	58.97	136	45.03
No	357	41.03	166	54.97

	Pretest		Pre- & 3-month follow-up	
	n	%	n	%
Receive SV information online				
Never	103	11.84	26	8.61
Once a Year	146	16.78	50	16.56
Monthly	405	46.55	133	44.04
Weekly	192	22.07	76	25.17
Daily	870	100	10	3.31
Received information about Sexual Violence prevention in the past				
From a Friend	208	23.91	85	28.15
Haven	699	80.34	240	79.47
Relative	151	17.36	47	15.56
OSU Workshop	61	7.01	75	24.83
Someone at University	52	5.98	34	11.26
No	72	8.28	20	6.62
Know Someone who has been a victim of sexual violence				
Yes	547	62.87	188	62.25
No	323	37.13	107	35.43
Know Someone who has been a perpetrator of sexual violence				
Yes	214	24.6	83	27.48
No	656	75.4	212	70.20
Party Attendance				
Never	175	20.11	81	26.82
1-5 times a month	338	38.85	144	47.68
6-10 times a month	240	27.59	50	16.56
More than 10 times a month	117	13.45	20	6.62

The composition of the study sample that completed both pretest and 3-month follow up was mostly 18-19 years old and mostly White, similar to the pretest sample as described in Table 2.1. There are some differences to the original sample. Those who completed both waves of data collection were mostly men, had a lower proportion of Hispanic students, and a higher proportion of participants reported not participating in fraternity/sorority organizations. Multi-group analysis showed no significant differences in any of the outcomes between those who completed both waves and those who did not.

Research Question 1: Modeling the TPB for Bystander Intervention

This study aims to evaluate if bystander intervention attitudes, subjective norms, perceived behavioral control and intentions to intervene predict bystander behaviors, utilizing the Theory of Planned Behavior (TPB). As shown in Table 2.2, all scales were highly correlated to each other (r>0.44), except for attitudes and perceived behavioral control (r>0.37).

There was a statistically significant effect on intention to intervene at pretest, with attitudes being the strongest predictor with β=0.43, CI 0.38-0.48, (z=17.34, p<0.001), followed by subjective norms β=0.25, CI 0.20- 0.31, (z=9.41, p<0.001), and perceived behavioral control β= 0.25 CI 0.16-0.37, (z=9.56, p<0.001). The effects of intention to intervene on bystander behaviors at pretest were also significant with β=0.27, CI 0.16 -0.37, (z=4.86, p<0.001). Also, there was a small but significant effect of perceived behavioral control on bystander behaviors β=0.13, CI 0.022- 0.23, (z=2.37, p=0.02).

Table 2.2

Correlations between scales for each of the proximal outcomes.

	SN	Att	PBC	Intent
SN	-			
Att	0.46***	-		
PBC	0.44***	0.37***	-	
Intent	0.56***	0.64***	0.52***	-

Note. N=302. *p<0.05, **p<0.01 and p<0.001. SN=Subjective norms, PBC=Perceived Behavioral Control; Intent=Intentions to intervene, BB=Bystander Behaviors.

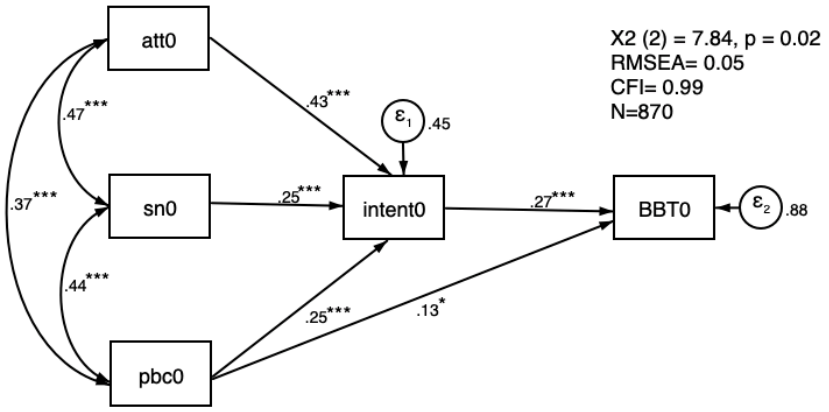

Note. N=870. att0=attitudes, sn0=subjective norms, pbc0=perceived behavioral control, intent0=intention to intervene, BBT0= bystander behaviors score, al at pretest. *p<0.05, **p<0.001, and ***p<0.001

Figure 2.2. Standardized estimates for bystander intention to intervene and bystander behaviors, TPB model for pretest sample.

The variance explained by intention was 55.02% and the variance of bystander behaviors was 12.34%. Figure 2.2 shows the fitted model with standardized partial regression coefficients estimates and summary of main fit statistics. Although, our model fails to significantly reproduce the covariance matrix of our variables, $\chi 2$ (2) = 7.84, p = 0.02, other fit statistics showed we have a good model. The root mean squared error (RMSEA) is 0.058 and the comprehensive fit index (CFI) is 0.99 provided evidence of a good fit compared to the null model.

Table 2.3

Standardized effects on bystander intention to intervene and bystander behaviors at pretest, TPB model.

Outcomes	Direct effect	Indirect effect	Total effect
Intention to intervene			
Attitude -> Intent	0.43***	-	0.43***
SN -> Intent	0.25***	-	0.25***
PBC -> Intent	0.25***	-	0.25***
Bystander Behaviors			
Intent->BB	0.27***	-	0.27***
Attitude -> BB	-	0.12***	0.12***
SN -> BB	-	0.068***	0.068***
PBC-> BB	0.13*	0.066***	0.19***

Note. *p<0.05, **p<0.01 and p<0.001. SN=Subjective norms, PBC=Perceived Behavioral Control; Intent=Intentions to intervene, BB=Bystander Behaviors.

Table 2.3 shows the summary of all the indirect and direct standardized effects on bystander intention to intervene and bystander behaviors. Indirect effects of proximal variables to bystander behaviors provide evidence of these factors as predictors of behavior. These results provide evidence to support the first hypothesis of this study, bystander proximal predictors predicted bystander behaviors. Interestingly, attitudes towards intervening had stronger direct effects to intention to intervene compared to other predictors. Also, attitudes had the strongest indirect effect to bystander behaviors. As hypothesized, intention and perceived behavioral control had strong total effects, compared to other predictors. Indirect effects of subjective norms and perceived behavioral control to bystander behaviors were relatively weak.

Research Question 2: Predicting Bystander Behaviors using the TPB

The second research question of the current study was to evaluate the relationship between proximal predictors at pretest- bystander intervention attitudes, subjective norms, perceived behavioral control, and intention to intervene- and bystander intervention behaviors at 3-month follow-up. I utilized a path model with change variables for each of the proximal scales. The results of this path analysis are shown in Figure 2.2. The model showed a very good fit of the data as reported in the post estimation analysis. The model significantly reproduces the covariance matrix of our variables, $\chi 2$ (2) = 2.58, p = 0.275, has a root mean squared error (RMSEA) of 0.0018 and the comprehensive fit index (CFI) of 0.99 providing evidence of a good fit compared to the null model.

As expected from the first hypothesis, results show that attitudes β=0.43, CI 0.38 - 0.48, (z=17.28, p<0.001), subjective norms β=0.25, CI 0.20- 0.31, (z=9.40, p<0.001), and perceived behavioral control β=0.25, 0.20- 0.30, (z=9.55, p<0.001) predicted intention to intervene. However, intention to intervene β=0.068, CI -0.010-0.14, (z=1.72, p>0.05) and perceived behavioral control β=-0.068, CI -0.14-0.010, (z=-1.72, p>0.05) did not predict bystander

behaviors at 3-month follow up. As shown in Table 2.4, the direct and indirect effects of predictor variables to bystander behaviors were weak and non-significant.

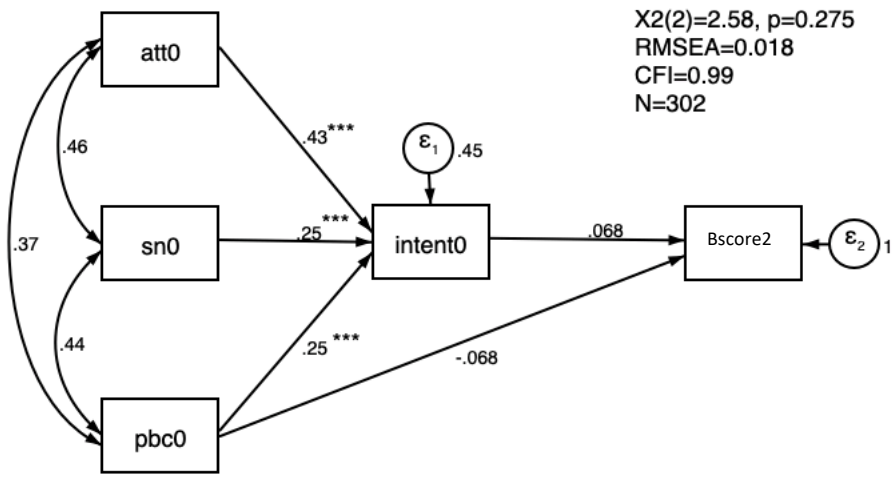

Note. N=302. att0=attitudes, sn0=subjective norms, pbc0=perceived behavioral control, intent0=intention to intervene at pre-test, Bscore2= bystander behaviors score, at 3-month follow-up. *p<0.05, **p<0.001, and ***p<0.0001.

Figure 2.3. *Standardized estimates between bystander intervention proximal variables at pre-test and bystander behaviors at 3-month follow up.*

Table 2.4

Standardized direct, indirect, and total estimates for the relationship between bystander intervention proximal variables at pretest and bystander behaviors at 3-month follow up.

Outcomes	Direct effect	Indirect effect	Total effect
Intention to intervene			
Attitude -> Intent	0.43***	-	0.43***
SN -> Intent	0.25***	-	0.25***
PBC -> Intent	0.25***	-	0.25***
Bystander Behaviors			
Intent->BB	0.068	-	0.068
Attitude -> BB	-	0.088	0.030
SN -> BB	-	0.091	0.017
PBC-> BB	-0.068	0.091	-0.051

Note. N=302. *p<0.05, **p<0.01 and p<0.001. SN=Subjective norms, PBC=Perceived Behavioral Control; Intent=Intentions to intervene, BB=Bystander Behaviors.

Discussion

This study provides an important contribution to the literature on the use of the Theory of Planned Behavior as a framework to study the influence of proximal variables on bystander behaviors. Other studies have looked at individual predictors of bystander behaviors finding that students actions when witnessing a sexually violent situation are complex and influenced by the proximal factors framed in the TPB (Austin, Dardis, Wilson, Gidycz, & Berkowitz, 2016; Hoxmeier et al., 2016; McMahon, Peterson, et al., 2015). However, to date, this is the first study to provide a structural model using all the factors of influence under the TPB to predict bystander behaviors. The findings of this study emphasize the importance of a framework to predict bystander behaviors, as well as understand the factors that have a higher contribution on bystander behaviors.

The results of this study provided evidence of a good model fit and indicated that attitudes, perceived behavioral control, subjective norms, are strong predictors of intentions to intervene. Also, intentions to intervene and perceived behavioral control are predictive of bystander behaviors. The model provides evidence of the strong role of bystander's attitudes towards intervening on intentions to intervene and moderate indirect effects on bystander behaviors. Previous research has supported the relationship between attitudes towards intervening and bystander behaviors (V. L. Banyard, 2008; V. L. Banyard & Moynihan, 2011a), as well as its role in a bystanders' intention to intervene (Hoxmeier, 2015). This study provides evidence of the importance of attitudes towards intervention to intention and behavior, relative to other predictors.

The intervention program under study, BGAD, has a focus on normalizing bystander intervention behaviors to reduce fear by providing students with knowledge of policies protecting bystanders that intervene and building empathy to survivors. Shaping positive attitudes towards intervening also requires addressing a shared culture of helping that debunks specific cultural and

attitudinal barriers of personal space and agency that may limit a bystander's willingness to intervene and thus be motivated enough to share responsibility. Emotions, like fear and empathy, do play an important role as precursors of attitudes towards intervening as well as perceived behavioral control and subjective norms. Students may perceive a situation to be too risky and fear for personal safety or backlash (Burn, 2009). Programs that focus on students' attitudes towards intervening could have a more significant influence in bystander behaviors. Prevention programs that focus on the positive outcomes of intervening and their impact on an individual and the community of peers; two areas that have been found to shape bystander attitudes (Banyard et al., 2008; Lonsway & Fitzgerald, 1994). Programs that increase attitudes towards intervening have been shown to have the highest effects when interventions have multiple sessions for an extended period, are delivered in same-sex groups, and are facilitated by professional educators (Katz & Moore, 2013).

In this study, we considered bystander behaviors under one dimension; bystanders intervened if they had the opportunity or not. However, a bystander may find different barriers to intervene depending on the situation and their appraisal of the situation may also vary. The sexual violence experiences witnessed by bystanders are so varied that they should be evaluated considering their complexity (Hoxmeier et al., 2016; McMahon & Banyard, 2012). The TPB could be used as a framework to study those variations further. Future research should consider modeling pre-assault, mid-assault, and post-assault interventions to understand if there is a different effect of proximal predictors for each of these bystander behaviors.

The current study also provided interesting results on the relationship of proximal variables to bystander behaviors over time. The model had a good fit; although the direct and indirect paths to bystander behavior were not significant. This model suggests that students' attitudes, subjective norms, and perceived behavioral control at the beginning of college did not influence bystander behaviors at 3-month follow-up. These results contradict previous research

that found that bystander intention predicts future bystander behaviors (Banyard, 2008). One explanation is that students' attitudes, perceived behavioral control, and subjective norms at the beginning of college have changed over time, and that earlier experiences do not shape bystander behaviors in the future. The students' subjective norms, attitudes, and perceived behavioral control are influenced by peer attitudes (V. L. Banyard & Moynihan, 2011b; Brown et al., 2014), changes in culture (Barnett, Sligar, & Wang, 2016), their cognitive development (Yeater, Treat, Viken, & McFall, 2010), and new sexual experiences (Buzi et al., 2003) throughout their college years. Future research should include models that measure the TPB over more extended periods. Also, extensions of this model, like the Theory of Triadic Influence (Flay, Snyder, & Petraitis, 2009), may be utilized to extend the model to include other distal and ultimate factors that influence proximal predictors of bystander behaviors. In particular, future theoretical models should consider environmental and contextual factors that could be barriers to a students' intervention, even when they are willing to intervene. These barriers should be considered when bystander behaviors are measured. For example, not being physically able to intervene due to intoxication or other psychical impairment. The implications of this finding are essential for the development of bystander intervention programs. Following the TPB, for a bystander behavior to be achieved, there needs to be both an intention to do that specific behavior and perceived control of that behavior (Ajzen, 2002a; Fishbein & Ajzen, 1975). Intervention programs should focus on long-term effects and changing factors throughout the college experience. Further research could explore the impact of multi-session interventions throughout the college experience that builds on the experiences of students during progressive developmental and experiential stages.

Limitations

Several limitations should be considered when interpreting the results. First, the results of this study were composed of students of only one campus; therefore, for these findings to be generalizable, they need to be replicated in a broader study population. This study also needs to

be interpreted, considering differences in the study sample at pretest and 3-month follow-up. The subset of participants who completed the 3-month follow up may be different from those who completed only the first wave of data. Students who completed the 3-month follow up were more likely to be male and not be in a fraternity/sorority organization. Another limitation to consider is that the student population at this college was ethnically homogeneous, with mostly white non-Hispanic students, which limits the generalization of findings to other race/ethnic groups.

Studies that rely on recall of the participant memory on experiences and self-report of their attitudes and beliefs are subject to social desirability bias and accuracy issues. To mitigate the impact of this limitation, students were asked to report on behaviors on a period of length of 3-months, gave students enough time to review the behaviors, and were specific to the confidentiality efforts in place. However, three months may be too short of a time for a student to experience an event where there is an opportunity to intervene. Thus, participants may have had fewer opportunity for bystander behaviors Measuring sexual violence experiences and bystander behaviors is very complex. The instrument utilized in this study asked about specific behaviors, with descriptions that do not necessarily convey the nuances and definitions of violent experiences. At the same time, the structured instrument limited the ability to capture all intervention behaviors experienced by the participants fully. However, this instrument was developed with a similar population to the one in this study and provided the most common experiences reported by other researchers (Banyard et al., 2008; Hoxmeier, 2015; Hoxmeier et al., 2017; McMahon et al., 2014). Future research could improve the measurement of bystander behaviors by extending the period of data collection and types of bystander intervention behaviors that are experienced by students. For example, this could include having students record their experiences as they happen over longer periods of time. Additionally, in -person data collection, such as re-visiting classrooms, may result in a higher follow-up response rate. For this study we sent a 3-month follow-up email to students, which resulted in a low response rate.

Despite these limitations, the current study contributes to the literature on bystander behaviors, and it provides essential information to practitioners working on sexual violence prevention programs on college campuses. Findings support the applicability of TPB in predicting bystander behaviors. Also, this study provides a further understanding of the proximal factors influencing these behaviors.

References

Ajzen, I. (1985). From intentions to actions: A theory of planned behavior. In P. D. J. Kuhl & D. J. Beckmann (Eds.), *Action control* (pp. 11–39). https://doi.org/10.1007/978-3-642-69746-3_2

Ajzen, I. (1991). The theory of planned behavior. *Organizational Behavior and Human Decision Processes*, *50*(2), 179–211. https://doi.org/10.1016/0749-5978(91)90020-T

Ajzen, I. (2002a). Perceived behavioral control, self-efficacy, locus of control, and the theory of planned behavior. *Journal of Applied Social Psychology*, *32*(4), 665–683.

Ajzen, I. (2002b). Residual Effects of past on later behavior: Habituation and reasoned action perspectives. *Personality and Social Psychology Review*, *6*(2), 107–122. https://doi.org/10.1207/S15327957PSPR0602_02

Ajzen, I., & Fishbein, M. (1980). *Understanding attitudes and predicting social behavior.* Englewood Cliffs, NJ: Prentice-Hall.

Amar, A. F., Sutherland, M., & Laughon, K. (2014). Gender differences in attitudes and beliefs associated with bystander behavior and sexual assault. *Journal of Forensic Nursing*, *10*(2), 84–91; quiz E1-2. https://doi.org/10.1097/JFN.0000000000000024

Anderson, C. (2001). Defining the severity of workplace violent events among medical and non-medical samples: A pilot study. *Gastroenterology Nursing: The Official Journal of the Society of Gastroenterology Nurses and Associates*, *24*(5), 225–230.

Anderson, L. A., & Whiston, S. C. (2005). Sexual assault education programs: A meta-analytic examination of their effectiveness. *Psychology of Women Quarterly*, *29*(4), 374–388.

Austin, M. J. M., Dardis, C. M., Wilson, M. S., Gidycz, C. A., & Berkowitz, A. D. (2016). Predictors of Sexual assault-specific prosocial bystander behavior and intentions: A prospective analysis. *Violence Against Women*, *22*(1), 90–111. https://doi.org/10.1177/1077801215597790

Baker, M. R., Frazier, P. A., Greer, C., Paulsen, J. A., Howard, K., Meredith, L. N., … Shallcross, S. L. (2016). Sexual victimization history predicts academic performance in college women. *Journal of Counseling Psychology*. https://doi.org/10.1037/cou0000146

Bandura, A. (1986). *Social foundations of thought and action: A social cognitive theory*. Englewood Cliffs, NJ: Prentice-Hall.

Bannon, R. S., Brosi, M. W., & Foubert, J. D. (2013). Sorority Women's and fraternity men's rape myth acceptance and bystander intervention attitudes. *Journal of Student Affairs Research & Practice*, *50*(1), 72–87. https://doi.org/10.1515/jsarp-2013-0005

Banyard, V. L. (2008). Measurement and correlates of prosocial bystander behavior: The case of interpersonal violence. *Violence and Victims*, *23*(1), 83–97. https://doi.org/10.1891/0886-6708.23.1.83

Banyard, V. L. (2015). *Toward the next generation of bystander prevention of sexual and relationship violence: Action coils to engage communities*. Retrieved from https://books.google.com/books?hl=en&lr=&id=53-BCgAAQBAJ&oi=fnd&pg=PP7&dq=+%22Social+Media%22+and+%22Social+Networking%22+and+%22Sexual+violence%22+and+%22Bystander+intervention%22&ots=K5e0KJFWzN&sig=MPFNqk2ZqRtZZ-7FRe50nkQzRKY

Banyard, V. L., & Moynihan, M. M. (2011). Variation in bystander behavior related to sexual and intimate partner violence prevention: Correlates in a sample of college students. *Psychology of Violence*, *1*(4), 287–301. https://doi.org/10.1037/a0023544

Banyard, V. L., Moynihan, M. M., & Plante, E. G. (2007). Sexual violence prevention through bystander education: An experimental evaluation. *Journal of Community Psychology*, *35*(4), 463–481. https://doi.org/10.1002/jcop.20159

Banyard, V. L., Plante, E. G., & Moynihan, M. M. (2004). Bystander education: Bringing a broader community perspective to sexual violence prevention. *Journal of Community Psychology*, *32*(1), 61–79.

Banyard, V., Potter, S. J., Cares, A. C., Williams, L. M., Moynihan, M. M., & Stapleton, J. G. (2018). Multiple sexual violence prevention tools: Doses and boosters. *Journal of Aggression, Conflict and Peace Research*. https://doi.org/10.1108/JACPR-05-2017-0287

Barnett, M. D., Sligar, K. B., & Wang, C. D. C. (2016). Religious affiliation, religiosity, gender, and rape myth acceptance: Feminist theory and rape culture. *Journal of Interpersonal Violence*. https://doi.org/10.1177/0886260516665110

Batson, C. D. (1994). The unresponsive bystander: Why doesnt he help?. *Contemporary Psychology*, *39*(10), 941–943.

Brown, A. L., Banyard, V. L., & Moynihan, M. M. (2014). College students as helpful bystanders against sexual violence: Gender, race, and year in college moderate the impact of perceived peer norms. *Psychology of Women Quarterly*, *38*(3), 350–362. https://doi.org/10.1177/0361684314526855

Burn, S. (2009). A situational model of sexual assault prevention through bystander intervention. *Sex Roles*, *60*(11–12), 779–792. https://doi.org/10.1007/s11199-008-9581-5

Burt, M. R. (1980). Cultural myths and supports for rape. *Journal of Personality and Social Psychology*, *38*(2), 217–230. https://doi.org/10.1037/0022-3514.38.2.217

Buzi, R. S., Tortolero, S. R., Roberts, R. E., Ross, M. W., Markham, C. M., & Fleschler, M. (2003). Gender differences in the consequences of a coercive sexual experience among adolescents attending alternative schools. *The Journal of School Health*, *73*(5), 191–196.

Cares, A. C., Banyard, V. L., Moynihan, M. M., Williams, L. M., Potter, S. J., & Stapleton, J. G. (2015). Changing attitudes about being a bystander to violence: Translating an in-person sexual violence prevention program to a new campus. *Violence Against Women*, *21*(2), 165–187. https://doi.org/10.1177/1077801214564681

DeGue, S. (2014). *Preventing sexual violence on college campuses: Lessons from research and practice.*. Retrieved from http://www.councilofpresidents.org/docs/CampusSA/meeting3_10_14_15/PreventingSVonCollegeCampuses.pdf

DeGue, S., Valle, L. A., Holt, M. K., Massetti, G. M., Matjasko, J. L., & Tharp, A. T. (2014). A systematic review of primary prevention strategies for sexual violence perpetration. *Aggression and Violent Behavior*, *19*(4), 346–362. https://doi.org/10.1016/j.avb.2014.05.004

Fishbein, M., & Ajzen, I. (1975). *Belief, attitude, intention, and behavior: An introduction to theory and research*. Reading, MA.: Addison-Wesley PubCo.

Fisher, B. S., Cullen, F. T., & Turner, M. G. (2000). *The sexual victimization of college women.* Retrieved from http://eric.ed.gov/?id=ED449712

Flack, W. F., Caron, M. L., Leinen, S. J., Breitenbach, K. G., Barber, A. M., Brown, E. N., … Stein, H. C. (2008). "The red zone": Temporal risk for unwanted sex among college students. *Journal of Interpersonal Violence*, *23*(9), 1177–1196. https://doi.org/10.1177/0886260508314308

Flay, B. R., Snyder, F., & Petraitis, J. (2009). The theory of triadic influence. *Emerging Theories in Health Promotion Practice and Research*, *2*, 451–510.

Foubert, J. D. (2013). Integrating religiosity and pornography use into the prediction of bystander efficacy and willingness to prevent sexual assault. *Journal of Psychology & Theology*, *41*(3), 242–251.

Garcia-Moreno, C., Jansen, H. A., Ellsberg, M., Heise, L., Watts, C. H., & others. (2006). Prevalence of intimate partner violence: Findings from the WHO multi-country study on women's health and domestic violence. *The Lancet*, *368*(9543), 1260–1269.

Hahn, C. K., Morris, J. M., & Jacobs, G. A. (2016). Predictors of bystander behaviors and sexual assertiveness among college women attending a sexual assault prevention program: Bystander Behaviors and Sexual Assertiveness. *Journal of Community Psychology*. https://doi.org/10.1002/jcop.21877

Hayes, R. M., Abbott, R. L., & Cook, S. (2016). It's her fault: Student acceptance of rape myths on two college campuses. *Violence Against Women*, *22*(13), 1540–1555. https://doi.org/10.1177/1077801216630147

Hoxmeier, J. C. (2015). *Students as pro-social bystanders: Opportunities, past behaviors, and intentions to intervene in sexual assault risk situations*. Retrieved from http://ir.library.oregonstate.edu/xmlui/handle/1957/55789

Hoxmeier, J. C., Acock, A. C., & Flay, B. R. (2017). Students as prosocial bystanders to sexual assault: Demographic correlates of intervention norms, intentions, and missed opportunities. *Journal of Interpersonal Violence*, 0886260517689888. https://doi.org/10.1177/0886260517689888

Hoxmeier, J. C., Flay, B. R., & Acock, A. C. (2016). Control, norms, and attitudes: Differences between students who do and do not intervene as bystanders to sexual assault. *Journal of Interpersonal Violence*. https://doi.org/10.1177/0886260515625503

Jewkes, R. (2002). Intimate partner violence: Causes and prevention. *The Lancet*, *359*(9315), 1423–1429.

Jordan, J. B. (2011). *Examining the effects of two sexual assault/date rape interventions in a population of college freshmen.* ProQuest Information & Learning.

Jouriles, E. N., Krauss, A., Vu, N. L., Banyard, V. L., & McDonald, R. (2018). Bystander programs addressing sexual violence on college campuses: A systematic review and meta-analysis of program outcomes and delivery methods. *Journal of American College Health*, *66*(6), 457–466. https://doi.org/10.1080/07448481.2018.1431906

Katz, J., & Moore, J. (2013). Bystander education training for campus sexual assault prevention: An initial meta-analysis. *Violence and Victims*, *28*(6), 1054–1067.

Kleinsasser, A., Jouriles, E. N., McDonald, R., & Rosenfield, D. (2015). An online bystander intervention program for the prevention of sexual violence. *Psychology of Violence*, *5*(3), 227–235. https://doi.org/10.1037/a0037393

Krebs, C. P., Lindquist, C. H., Berzofsky, M., Shook-Sa, B., & Peterson, K. (2016). *Campus climate survey validation study final technical report*. Retrieved from Bureau of Justice Statistics website: https://www.bjs.gov/content/pub/pdf/ccsvsftr.pdf

Labhardt, D., Holdsworth, E., Brown, S., & Howat, D. (2017). You see but you do not observe: A review of bystander intervention and sexual assault on university campuses. *Aggression and Violent Behavior*, *35*, 13–25. https://doi.org/10.1016/j.avb.2017.05.005

Langhinrichsen-Rohling, J., Foubert, J. D., Brasfield, H. M., Hill, B., & Shelley-Tremblay, S. (2011). The Men's Program: Does it impact college men's self-reported bystander efficacy and willingness to intervene? *Violence Against Women*, *17*(6), 743–759. https://doi.org/10.1177/1077801211409728

Latané, B., & Darley, J. M. (1970). *The unresponsive bystander: Why doesn't he help?* New York: Appleton-Century Crofts.

Littleton, H., Grills - Taquechel, A., & Axsom, D. (2009). Impaired and incapacitated rape victims: Assault characteristics and post-assault experiences. *Violence and Victims*, *24*(4), 439–457. https://doi.org/10.1891/0886-6708.24.4.439

Lonsway, K. A., & Fitzgerald, L. F. (1994). Rape myths in review. *Psychology of Women Quarterly*, *18*(2), 133–164.

Mcfarlane, J., Malecha, A., Watson, K., Gist, J., Batten, E., Hall, I., & Smith, S. (2005). Intimate partner sexual assault against women: Frequency, health consequences, and treatment outcomes. *Obstetrics & Gynecology*, *105*(1), 99–108. https://doi.org/10.1097/01.AOG.0000146641.98665.b6

McMahon, S. (2010). Rape myth beliefs and bystander attitudes among incoming college students. *Journal of American College Health: J of ACH*, *59*(1), 3–11. https://doi.org/10.1080/07448481.2010.483715

McMahon, S. (2015). Call for research on bystander intervention to prevent sexual violence: The role of campus environments. *American Journal of Community Psychology*, *55*(3–4), 472–489. https://doi.org/10.1007/s10464-015-9724-0

McMahon, S., Allen, C. T., Postmus, J. L., McMahon, S. M., Peterson, N. A., & Lowe Hoffman, M. (2014). Measuring bystander attitudes and behavior to prevent sexual violence. *Journal of American College Health*, *62*(1), 58–66. https://doi.org/10.1080/07448481.2013.849258

McMahon, S., & Banyard, V. L. (2012). When can I help? A conceptual framework for the prevention of sexual violence through bystander intervention. *Trauma, Violence & Abuse*, *13*(1), 3–14. https://doi.org/10.1177/1524838011426015

McMahon, S., & Farmer, G. L. (2011). An updated measure for assessing subtle rape myths. *Social Work Research*, *35*(2), 71–81. https://doi.org/10.1093/swr/35.2.71

McMahon, S., Peterson, N. A., Winter, S. C., Palmer, J. E., Postmus, J. L., & Koenick, R. A. (2015). Predicting bystander behavior to prevent sexual assault on college campuses: The role of self-efficacy and intent. *American Journal of Community Psychology*, *56*(1–2), 46–56. https://doi.org/10.1007/s10464-015-9740-0

Muehlenhard, C. L., Peterson, Z. D., Humphreys, T. P., & Jozkowski, K. N. (2017). Evaluating the one-in-five statistic: Women's risk of sexual assault while in college. *The Journal of Sex Research*, *54*(4–5), 549–576. https://doi.org/10.1080/00224499.2017.1295014

Paulhus, D. L. (1984). Two-component models of socially desirable responding. *Journal of Personality and Social Psychology*, *46*(3), 598.

Payne, D. L., Lonsway, K. A., & Fitzgerald, L. F. (1999). Rape myth acceptance: Exploration of its structure and its measurement using the Illinois Rape Myth Acceptance Scale. *ResearchGate*. Retrieved from https://www.researchgate.net/publication/230801415_Rape_Myth_Acceptance_Exploration_of_Its_Structure_and_Its_Measurement_Using_the_Illinois_Rape_Myth_Acceptance_Scale

Rhodes, R. E., Blanchard, C. M., & Matheson, D. H. (2006). A multicomponent model of the theory of planned behaviour. *British Journal of Health Psychology*, *11*(1), 119–137.

Shaw, J., & Janulis, P. (2016). Re-evaluating sexual violence prevention through bystander education. *Journal of Interpersonal Violence*, *31*(16), 2729–2750. https://doi.org/10.1177/0886260515580365

Smith, S. G., Chen, J., Basile, K. C., Gilbert, L. K., Merrick, M., Patel, N., … Jain, A. (2017). *The National Intimate Partner and Sexual Violence Survey (NISVS): 2010-2012 state report*. Atlanta, GA: National Center for Injury Prevention and Control, Centers for Disease Control and Prevention.

Steinmetz, H., Knappstein, M., Ajzen, I., Schmidt, P., & Kabst, R. (2016). How Effective are behavior change interventions based on the Theory of Planned Behavior? *Zeitschrift für Psychologie*. Retrieved from http://econtent.hogrefe.com/doi/full/10.1027/2151-2604/a000255

Trafimow, D., Sheeran, P., Conner, M., & Finlay, K. A. (2002). Evidence that perceived behavioural control is a multidimensional construct: Perceived control and perceived difficulty. *British Journal of Social Psychology*, *41*(1), 101–121.

Ullman, U., & Ullman, S. (201206). Problem drinking and drug abuse in women sexual assault survivors: Role of trauma history, coping, and PTSD. *Alcoholism-Clinical and Experimental Research*, *36*, 215A-215A.

World Health Organization (WHO). (2013). *Global and regional estimates of violence against women: Prevalence and health effects of intimate partner violence and non-partner sexual violence*. Retrieved from https://books.google.com/books?hl=en&lr=&id=ZLMXDAAAQBAJ&oi=fnd&pg=PP1&dq=sexual+violence+world+statistics&ots=eYhbKb_efx&sig=2Tomzkj9eUvEJs23CLMzIIcFf9U

Yeater, E. A., Treat, T. A., Viken, R. J., & McFall, R. M. (2010). Cognitive processes underlying women's risk judgments: Associations with sexual victimization history and rape myth acceptance. *Journal of Consulting and Clinical Psychology*, *78*(3), 375–386. https://doi.org/10.1037/a0019297

CHAPTER 3: MANUSCRIPT 2

Bystander intervention training to prevent sexual violence on college campuses: An evaluation study.

Abstract

Objective: To examine if a bystander intervention program to prevent sexual violence is effective in increasing bystander intervention behaviors, bystander positive attitudes and subjective norms about intervening, bystander perceived behavioral control, and intentions to intervene, and decreasing rape myths.

Participants: The current study has a quasi-experimental design with a convenience sample of first-year undergraduate students at a college campus in the northwest. Participants in the intervention group participated in a bystander intervention program called Beavers Give A Dam (BGAD). Participants in the comparison group were students who did not participate in BGAD and were recruited from first-year introductory courses.

Methods: There were three waves of data collection of pre-intervention during the fall term of 2017, and immediate post- and 3-month follow-up, during the winter of 2018. Analysis of variance and regression analysis were utilized to explain group differences and associations between predictors, of the Theory of Planned Behavior (TPB), and bystander intervention behaviors. A modified version of the Sexual Assault Bystander Behavior Questionnaire (SABBQ-R) was utilized to measure the variables under the TPB.

Results: Overall the intervention did not have a significant effect increasing bystander behaviors at 3-month follow up, when compared to the comparison group. The intervention had an effect on immediate post-intervention when only the intervention group was considered. Findings on students' opportunities to intervene, bystander behaviors experienced, and gender differences in TPB predictors at pre-intervention are reported.

Conclusions: Results support the development of bystander intervention programs that address the characteristics of specific subpopulations of students. This study provided evidence of the important role of alcohol, opportunities to intervene experienced by students, type of experiences

where students intervene, and gender differences in the development of bystander behavior programs.

Introduction

The National Intimate Partner and Sexual Violence Survey State Report estimated that from 2010 to 2012, 1 in 3 women (36.3%) and 1 in 6 men (17.1%) in the US had experienced some form of sexual violence during their lifetime (Smith et al., 2017). In 2014, it was estimated that 1 in 5 women on college campuses are sexually assaulted (Muehlenhard, Peterson, Humphreys, & Jozkowski, 2017). More than 70% of women that reported having experienced completed rape had their first victimization before they were 24 years old. In many cases (44.9%), an acquaintance was the perpetrator, and around 91% of them were male (Smith et al., 2017).

The victims of sexual violence can experience immediate psychological trauma that can be chronic, including stress, anxiety, depression, and attempted or completed suicide (Littleton et al., 2009). The consequences of trauma experienced by college students coupled with the stresses of their development as adults and the college experience itself can have significant ramifications for their academic and professional success. There is evidence that women who have experienced sexual assault are more likely to have lower GPA; and that negative academic performance is associated with the severity of the sexually violent experience (Baker et al., 2016; Jordan, 2011).

Sexual Violence Prevention on College Campuses

The sexual violence prevention programs that have been implemented and evaluated on college campuses vary significantly in length, content, delivery, emphasis on gendered content (e.g., gender-neutral vs. traditional social norms about masculinity), target audience, single vs. mixed gender groups, evaluated outcomes and program efficacy (DeGue et al., 2014; Katz & Moore, 2013). Research has found that most of the sexual violence experienced by students on college campuses occurs during the first few months in college. Sexual violence preventionists recognize this period as the “red zone,” where some college students engage in high-risk behaviors, in both party and non-party contexts (Flack et al., 2008). Sexual violence does not

occur because of the actions of victims, but it is a time where multiple factors play together to provide more opportunities for violence to occur, including parties, alcohol consumption, new environment, and pledging (to any student/non-student organization including fraternity and sororities). Students participate in most of the sexual violence prevention programs during the first few months after college starts, with about 54% of participants being in their first year in college (Katz & Moore, 2013).

Bystander Intervention: A Sexual Violence Prevention Strategy

A bystander is a witness of potential or actual misconduct, emergency, crime, or high-risk situation, who is not the perpetrator or the victim. Specifically, in the case of sexual violence, a bystander is someone who has the opportunity to intervene in the presence of a potential or actual sexually violent situation that is being experienced and perpetrated by others. Thus, a bystander prevention model makes the community part of the solution by centering sexual violence prevention on the bystanders, and their ability to act before, during or after situations where there is a risk of violence. Research has found that the bystander intervention strategy for sexual violence prevention is a promising approach to change the culture of violence on college campuses (DeGue et al., 2014; Katz & Moore, 2013).

Multiple social and behavioral scientists have promoted the bystander prevention model. Latané and Darley (1970) studied the reasons why bystanders are motivated to intervene, who intervenes, and in which situations bystanders interventions occur. Their results supported that there is an important role of subjective norms in order to perform helping behaviors. From this work, Banyard et al. (2004) proposed a bystander intervention model based on the premise that by transforming broader community social norms and engaging more people sexual violence can be prevented. These works have been the basis for the development of bystander intervention programs on college campuses, nationally and internationally (Labhardt et al., 2017) .

Multiple studies have shown that bystander education programs can be effective in preventing sexual violence on college campuses (Anderson & Whiston, 2005; Jouriles et al., 2018; Katz & Moore, 2013). A meta-analysis analyzed the effect of bystander education programs to promote positive bystander outcomes among those who participated compared to those who did not and found bystander education programs to affect both bystander and rape-related outcomes (Katz & Moore, 2013). These programs had moderate effects in increasing bystander efficacy and intent to help, and smaller effects on bystander behaviors and rape-supported attitudes, like acceptance of rape myths. Some college prevention specialists implement rigorously evaluated bystander interventions, while others provide custom solutions. Most of these custom interventions are not assessed to identify their effectiveness to increase bystander behaviors, including the predictors to be addressed to impact change, focusing mostly on intentions to intervene and rape myth related attitudes (Anderson & Whiston, 2005; Banyard et al., 2007; DeGue et al., 2014; Katz & Moore, 2013; McMahon, 2015a; Shaw & Janulis, 2016). Evaluations are costly and time-consuming, which makes it an unfeasible feat to accomplish for many colleges that nevertheless, with limited resources, have developed programs for their students.

The Theory of Planned Behavior and Bystander Intervention Behaviors

The Theory of Planned Behavior (TPB; Ajzen, 1985, 1991; Ajzen & Fishbein, 1980) utilizes proximal level factors that are closely related to and predictive of individuals' behaviors. The basis of this theory is that the prospect of cognitive self-regulation in the context of a dispositional approach for behaviors that are under volitional control (Ajzen, 1991). Thus, if given the opportunity and having the appropriate resources, paired with enough motivation or willingness, the behavior is performed. The TPB explains that for behavior to be achieved, there needs to be both an intention to do that specific behavior and perceived control of that behavior. The TPB has been widely used to predict behaviors, including physical exercise, nutrition, sexual

behaviors (Steinmetz et al., 2016), and bystander intervention behaviors (Hoxmeier et al., 2016). Following this theory, having positive attitudes and subjective norms towards bystander intervention and greater perceived behavioral control predicts stronger intention to intervene if they witness a potential or actual sexually violent situation.

Acceptance of Rape Myths

Negative attitudes towards bystander intervention behaviors are found to be associated with pervasive myths about rape (McMahon, 2010). These rape myth attitudes are beliefs, which are stereotyped views about sexual violence, assign the blame to the victim, normalize rape behavior, and excuse sexual assault (Burt, 1980). Defined more specifically, rape myths are false beliefs that justify sexual violence from men to women (Lonsway & Fitzgerald, 1994). Although sexual violence perpetrated by men against women is very prevalent, rape myths exist for people of any gender, beyond the usual binary definitions. Utilizing the TPB (TPB; Ajzen, 1985) as a framework, rape myths are considered beliefs that shape students' attitudes toward intervening if they witness an actual or potential sexually violent situation. A study performed with undergraduate students found that higher rape myth acceptance was negatively associated with willingness to intervene when students witnessed sexual violence situations (Banyard & Moynihan, 2011; McMahon, 2010). Male students have reported higher rape myth acceptance, especially those students that are part of a fraternity, athletes, those that have not participated in sexual violence education, and those who do not know someone that has been sexually assaulted (McMahon, 2010). These findings suggest that there is a role of gender that can be important in sexual violence prevention, and specifically bystander intervention prevention strategies. Thus, in this study we include a measure of this construct to understand if there was an impact of the intervention to reduce the acceptance of rape myths.

Research Gap

The current study is the first to utilize all the constructs under the Theory of Planned Behavior (TPB) to study the impact of a bystander intervention program to predict bystander behaviors. Very few bystander intervention programs implemented on college campuses in the US have been evaluated (Katz & Moore, 2013). Federal mandates like Title IX, VAWA, the Campus SaVE Act, and the Clery Act do ask universities to implement prevention programs and recommend bystander intervention training; however, the use of evidence-based programs is not required. Also, many universities are unable to implement these programs due to lack of resources and partnerships with researchers and evaluators that could share knowledge and resources. Some studies utilized the constructs of the TPB and found it to be a good model to predict bystander behaviors and related proximal outcomes (Hoxmeier et al., 2016; McMahon, Peterson, et al., 2015), although they have not utilized it as an evaluation framework. Thus, the development and evaluation of bystander intervention programs is a crucial step towards the dissemination of evidence-based programs and increasing their reach to other colleges in the US. Also, this study considers students past opportunities to intervene to identify where bystander behaviors are needed and providing college prevention experts with evidence of areas to address in their prevention efforts.

Current Study

The purpose of the current study was to examine whether the bystander intervention program, Beavers Give A Dam (BGAD), is an effective strategy to increase bystander intervention behaviors, positive bystander attitudes and subjective norms about intervening, increasing bystander perceived behavioral control, decreasing rape myths and increasing intentions to intervene over time.

Research question 1. Will students who participate in BGAD have higher positive changes in bystander intervention attitudes, subjective norms, perceived behavioral control,

intentions to intervene, bystander intervention behaviors, and lower rape myth acceptance at immediately post-intervention and at 3-month follow up, compared to students that did not participate in the program?

Hypothesis 1. Students who participated in BGAD will have increased bystander behaviors at 3-month follow up, compared to those students who did not participate.

Hypothesis 2. Students who participated in BGAD will have increased positive attitudes towards intervening post and 3-month follow up, compared to those students who did not participate.

Hypothesis 3. Students who participated in BGAD will have increased confidence to intervene at immediately post-intervention and 3-month follow up, compared to those students who did not participate.

Hypothesis 4. Students who participated in BGAD will be more likely to intervene at immediately post-intervention and 3-month follow up, than those students who did not participate.

Hypothesis 5. Students who participated in BGAD will have lower rape myth acceptance at immediately post-intervention and 3-month follow up, compared to those students who did not participate.

Hypothesis 6. Students who participated in BGAD will have positive subjective norms towards intervening at immediately post-intervention and 3-month follow up, compared to those students who did not participate.

Research question 2. Is BGAD effective in increasing bystander behaviors at 3-month follow up, by positively changing bystander positive attitudes and bystander subjective norms about intervening, and increasing bystander perceived behavioral control that will increase bystander intentions to intervene, and by the direct influence of bystander intentions and perceived behavioral control?

Hypothesis 7. Students who participated in BGAD, and had the opportunity to intervene, will report increased bystander behaviors at 3-month follow up, due to increased bystander positive attitudes and bystander subjective norms about intervening, and increased bystander perceived behavioral control that will influence bystander intentions to intervene.

Description of Bystander Intervention Program: Beavers Give A Dam

The program under evaluation in this study was developed to increase bystander intervention behaviors that prevent sexual violence situations before they happen with friends, acquaintances, or strangers. The program is delivered by both trained staff and peer facilitators, in a setting outside the classroom and has a duration of 2 hours. The program is delivered to both single-sex and mixed-gender audiences. The program is implemented during the first weeks of the college academic year before October events like Halloween, rush, and other holidays were there are a higher prevalence of sexual violence reports on college campuses. Participation in this program is voluntary. To participate students, make a request to the prevention and wellness department (PWD) of the institution. Then the health promotion team schedule facilitator and peer trainings, identify resources, and coordinate the implementation of the program. The program is intended to be implemented during the first month students are in college, thus the PWD advertises the program through student organizations, especially fraternities and sororities, during welcome week and first week of classes. This intervention supports the perspective that sexual violence is a symptom of larger systems of power, privilege, and oppression, not strictly limited to gender identity. There is a focus on the use of correct language, by promoting inclusiveness, gender-neutral language, and acknowledging sexual violence has no bias, without undermining the groups that are most affected by it. Participants and facilitators also identify victim-blaming language and address it throughout the program. The program utilizes multiple passive, active and transformational learning strategies to change norms associated with students' perceptions related to what others think about intervening; to give them strategies that can be

utilized to intervene in different situations; and to change their attitudes towards bystander intervention and the myths associated with sexual violence victimization. The goal of this program is to empower would-be bystanders to intervene if they witness a potential or actual sexually violent situation. The expected long-term impacts of this program are to increase student participation in sexual violence programs, increase the number of students reporting incidents of sexual violence to the university, reduce victimization rates and increase empathy and support of survivors. The program is one component of a broader campus-wide approach to sexual violence prevention.

Methods

Data Source and Sample

This study utilized a quasi-experimental design, with an intervention and comparison group of undergraduate students at Oregon State University (OSU). The selected research design was most appropriate for the study since there was no possibility for a random assignment without disrupting the programmed timeline for the implementation of the intervention to students by university sexual health promotion and violence prevention educators.

In this study, I utilized a non-probability convenience sample was utilized to recruit first-year undergraduate students. I targeted students who were in their first year in college since they are at higher risk of incidence of sexual violence (Smith et al., 2017) and are the leading target group for prevention programs on college campuses (Flack et al., 2008). This study was implemented during normal operations.

Both samples of students at Oregon State University (OSU) completed a questionnaire that included a modified version of the Sexual Assault Bystander Behavior Questionnaire (SABB-Q; (Hoxmeier et al., 2016), the revised Illinois Rape Myth Acceptance Scale-Short Form (IRMA-SF-R; McMahon & Farmer, 2011), Paulhus' Impression Management Scale (BIDR-IM; Paulhus, 1984), demographic questions, and items related to participation and exposure to sexual

violence prevention education. A sample of the questionnaire is in the Appendix B. OSU Corvallis Campus is the only location for the study since BGAD is not available in other sites.

The students in the intervention group were students who were enrolled to participate in a sexual violence prevention bystander intervention BGAD voluntarily. Students participated in the program on three different days during a period of two weeks. When students arrived to their assigned BGAD session, they were invited to participate in the study by presenting everyone with the same video offering information about the study and instructions to participate. Those who did not agree to participate in the study were directed to complete an online survey about thriving and nutrition. For the intervention group, three waves of data were collected: pre-intervention, immediately post-intervention, and 3-month follow-up. The pre-intervention and post-intervention data were collected in the fall of 2017, and 3-month follow-up in the winter of 2018. The pre- and immediately post-intervention questionnaires were administered online while students were in the room, before and after participating in the BGAD program. All of the students who were scheduled to participate in the intervention were from fraternity and sorority institutions.

The comparison group was students who were not enrolled to participate in BGAD and were recruited from classrooms offering first-year introductory courses. The participants in the comparison group participated in two waves of data collection, a pre-test (called pre-intervention throughout) and 3-month follow up. I collected data in the fall of 2017 for pre-intervention, and in the winter of 2018 for the 3-month follow-up. The pre-intervention questionnaire was administered in-person in the classroom utilizing an online tool. I identified instructors of 65 undergraduate introductory courses and sent an email to request participation in the research study, with the intention of recruiting students from a variety of disciplines. A total of 19 instructors agreed to provide class time for their students to participate in the study. We were able to recruit from introductory courses in computer science, public health, forestry, social sciences,

engineering, mathematics, literature, and other college experience and engagement introductory courses targeting first year students. Before data collection all facilitators and instructors played a video with information of the study and the online link to access to complete the questionnaire. Students were invited to participate in the study and complete the questionnaire during their scheduled class time.

All participants had a computer, tablet, or phone to complete the approximately 15-minute-long questionnaire. For both the intervention and comparison groups, the 3-month follow-up was administered online through an email invitation to the questionnaire. Students were invited to send questions related to the study from their phones to the researcher. These messages did not show identifying information from the participant and were deleted after a few minutes. This provided some confidentiality to participants, a necessary step in the implementation of an evaluation on sexual violence. All students who participated in the study received an OSU lip balm or t-shirt, and those who completed the 3-month follow-up received an incentive of $5 to their student account. All instruments and procedures were approved by the university's Institutional Review Board.

Students were eligible in the sample if they consented to participate in the study, were a first-year student, and had not participated in BGAD in the past. Power analysis was done to estimate the minimum number of students required to participate in this research, with enough power to detect an effect. I utilized an effect size of 0.1 (Cohen's d) since previous similar studies have found this to be the smallest average effect size for the outcomes of interest in this evaluation (Katz & Moore, 2013).

Table 3.1

Study Participants and Response Rates for Each Wave of Data Collection by Group.

	Intervention Group		Comparison Group		All	
	n	%	n	%	n	%
Students Recruited	764		1,152		1,916	
Completed Survey	605	79.21	764	66.30	1,369	71.5
Eligible Sample						
Pre-intervention	484	80.00	386	50.53	870	63.55
Post-intervention	445	91.94	-	-	-	-
3-month follow-up	124	25.62	178	46.11	302	34.71

*Note: Post-intervention and 3 months follow up response rates utilize pre-intervention as denominator. Of those who participated in the intervention who were sent the follow up.

The calculated minimum total sample was 788 (394 per group). Table 3.1 describes the sample sizes and response rates by group. A total of 1,916 undergraduate students were invited to participate in the study. At pre-intervention 1,369 students completed the questionnaire for a 71.5% response rate. A total of 870 first-year students was eligible to be included in the sample at pre-intervention (63.5%).

In Fall term of 2017, the total first year undergraduate student enrollment at OSU was 3,778; thus, our study sample of 870 pre-intervention and post-, and 302 for 3-month follow-up represents 23.0% and 8.0% of the first-year population, respectively.

Measures

The questionnaire utilized in this study included items on demographic characteristics, parents educational level, student group membership, participation in sexual violence prevention programs, party attendance, the experience of sexual violence victimization, and a modified version of the Sexual Assault Bystander Behavior Questionnaire (SABB-Q ; Hoxmeier, Flay, & Acock, 2016). The description of the principal component analysis for each of the scales can be found in the Appendix C.

Demographic characteristics. I asked students their age with “What is your age?” The five possible responses included “Under 18,” “18-19,” “20-21,” “22-23,” and “24+.” I also asked students about their gender, by asking them, “What is your gender?” To improve inclusivity, I included the following possible responses: “Woman,” “Man,” “Non-binary,” “Trans-man,” “Trans-woman,” and “Other.” However, all students in the sample identified as “Woman” or “Man.” I asked students about their race/ethnicity by asking “What is your race/ethnicity?,” with response options of “White Non-Hispanic,” “Black or African American,” “Hispanic,” “American Indian or Alaska Native,” “Native Hawaiian or Pacific Islander,” “Asian American,” and “Other.”

Parents’ education level. I considered education level of the parents by asking students, "What is the education level of your father?" and "What is the education level of your mother?" Response options were "Less than high school," "High school graduate,” "Some college,” "Bachelor's degree,” and "Advanced degree.”

Student group membership. I asked students if they are members of a fraternity/sorority by asking, “Are you a member of a sorority/fraternity?” Students responded “Yes” or “No.”

Participation in and access to sexual violence prevention programs. To assess students’ eligibility to participate in the study and assess contamination of our data, I asked students about their participation in sexual violence prevention programs. I assessed if they had participated in BGAD in the past, “Have you ever participated in “Beavers Give a Dam” (BGAD), OSU’s in-person bystander training program?” Responses options were “Yes,” “No,” or “I do not know.” To assess if students have received information about sexual violence prevention in the past I asked, “Has someone talked to you about the BGAD prevention program at OSU?” Responses options were “Yes, a friend,” “Yes, someone who works for the university,” “Yes, other,” and “No.” I also asked students about receiving information about sexual violence from other sources by asking the question “Have you received information or talked to someone

about sexual violence prevention in the past?" Students could respond by selecting one or more of the following: "Yes, Haven (online program from OSU)," "Yes, OSU workshop," "Yes, other programs, workshops or training. Which one?" "Yes, a friend," "Yes, a relative," "Yes, another person. Who?" and "No." Finally, I asked students how often they saw sexual violence information online by asking, "How often do you see information about sexual violence prevention online?" Response options were "Never," "Once a year," "Monthly," "Weekly," and "Daily."

Party attendance. Students from fraternity/sororities are known to participate in many social events. Thus, I assessed party attendance since students who participate in parties, especially if alcohol is present, may have more opportunities to intervene than those who do not attend (Banyard et al., 2011). I asked students, "How often do you attend parties where alcohol is present?" Responses options were "Never," "1-5 times a month," "6-10 times a month," or "More than ten times a month."

Sexual violence victimization and perpetration. I asked students if they knew someone who has been a victim or perpetrator by asking "Do you know someone who has been a victim of sexual violence?" and "Do you know someone who has been a perpetrator of sexual violence?" Response options were "Yes" or "No."

Measuring Outcomes and Predictors of Bystander Intervention Behaviors

I used a modified version of the Sexual Assault Bystander Behavior Questionnaire (SABB-Q; Hoxmeier, Flay, & Acock, 2016) to assess the primary outcomes of this study. The proximal factors to bystander intervention include bystander perceived behavioral control to intervene, attitudes towards intervening, subjective norms about intervening, intention to intervene, and bystander intervention behaviors.

Hoxmeier et al. (2015) validated this questionnaire in a similar population as in this study. The scales were created utilizing a contextual framework developed by McMahon and

Banyard (2011), where they identified common bystander behaviors encountered by students in the college context. Hoxmeier (2015) selected the items that related to general sexual violence experiences (not dating violence), as well as behaviors occurring before, during, and after sexual violence. As part of the validation process, the author performed cognitive interviews to assess the readability of the items. The scales had consistent reliability and demonstrated good fit and validity (Hoxmeier, 2015).

Bystander Attitudes towards intervening. I asked if they found it unhelpful or helpful to take each of the 11 bystander behaviors presented, with a seven-point polar Liker-type scale from "Totally unhelpful" to "Totally helpful." The scale demonstrated high reliability of 0.91.

Bystander intention to intervene. Students were asked how likely they are to take action for each of the 11 bystander behaviors, with a seven-point Likert-type scale with anchors from "Totally unlikely" to "Totally Likely." The scale had high reliability of 0.90.

Bystander subjective norms about intervening. Students were asked how much their friends would disapprove or approve if they took action in any of the 11 bystander behaviors, with a Likert-type scale from "Totally Disapprove" to "Totally Approve." The scale demonstrated high reliability of 0.92.

Bystander perceived behavioral control to intervene. Students were asked how difficult it would be to take action in each of the 11 bystander behaviors, with a seven-point Likert-type scale from "Very Difficult" to "Very Easy." The scale demonstrated high reliability of 0.90.

Bystander behaviors and opportunities to intervene. I asked students if they have encountered each of the 11 bystander behaviors. If students answered "Yes," they were asked about their response, with five possible answers "Did nothing, it wasn't my business," "Did nothing because I wasn't sure what to do," "Did something, confronted the situation directly," "Did something, went and got assistance from someone else," "Other (please specify)." For some

analyses, I utilized a dichotomous variable that represented those who intervened and those who did not, of those that had the opportunity to intervene. The bystander behavior score was obtained by summing the number of behaviors they reported having done. Cronbach's alpha for the bystander score was 0.89.

Rape myth acceptance. The acceptance of rape myths was measured utilizing the Revised Illinois Rape Myth Acceptance Scale-Short Form (IRMAS-SF-R), a 22-item scale developed to assess participants endorsement of rape myths (McMahon & Farmer, 2011; Payne, Lonsway, & Fitzgerald, 1999). Individuals responded to the items utilizing a five-point Likert-type scale, ranging from 1 = strongly disagree to 5 = strongly agree. This scale has an overall reliability of 0.93.

Analyses

Data cleaning was done using SPSS 24, and all quantitative data analyses were conducted using Stata 14. I performed a descriptive analysis of each proximal variable and bystander behaviors. To understand patterns of missing data, I analyzed patterns of missing data for all demographics, proximal and outcome variables in the study for all time points. I analyzed if there was any group mean differences between participants with missing information and non-missing. I compared the characteristics of those who completed 3-month follow up and those who did not, including analysis of differences in the outcomes under study at pre-intervention.

I conducted descriptive analyses for each of the outcomes and determined means for each group and time. I compared individual item means for bystander behaviors by gender using an independent group t-test. Next, I used multivariate analysis of variance with pre-intervention data to determine whether intervention groups differed significantly on outcome variables. Clustering was considered in the analyses since the intervention occurred in different classrooms and settings. This was a dummy variable that identified which room the student was in when data collection was done. Also, I considered social desirability and demographic characteristics in the

analysis as covariates. To assess the effects of the program, I performed a repeated measures multiple analysis of covariance after considering assumptions of homogeneity of variance and linear relationships between dependent variables and covariates. Paired sample t-test was utilized to compare the intervention and the comparison group. The role of gender was further examined using a MANCOVA analysis. Finally, a binomial logistic regression analysis was performed to study the association of changes in mean scores between pre-intervention scores for the main proximal outcomes under study and bystander behaviors at 3-month follow-up. The linearity of continuous variables was also assessed. I analyzed if there were any differences on proximal outcomes between those who did not complete the 3 months follow up and those who did to assess if there were any celling effects or attrition of the results.

Results

The intervention and comparison groups differ across some of characteristics measured. Table 2 shows the characteristics of each group and the independent sample mean comparisons. Compared to the comparison group, the intervention group had a significantly higher proportion of students who were women (55.58% vs 44.56%), White Non-Hispanic (84.71% vs 68.92%), and who reported that their father (46.49% vs. 32.90%) and mother (50.00% vs. 37.56%) had a bachelor's degree. Most knew someone who was a victim of sexual violence (66.32% vs. 58.55%) and attended parties 6-10 times a month (40.91% vs. 10.88%). The comparison group had a higher proportion of participants who were Asian (14.77% vs. 3.93%), had a father (7.51% vs 2.07%) and mother (5.96% vs 1.03%) with education less than high school, and had a mother with an advanced degree (26.17% vs 19.83%), as compared to the intervention group. Participants in the comparison group were also more likely to report never attending a party (40.41% vs. 3.93%). Finally, all the students in the intervention group were members of a fraternity and sorority, compared to 7.51% of the comparison group.

Students that did not participate in the 3-month follow up were more likely to be men χ^2 (1, n=870)= 24.73, p<0.001, be in a fraternity/sorority χ^2 (1, n=870)= 34.47, p<0.00, participate in parties more χ^2 (1, n=870)= 24.03, p<0.001, and reported less intervention behaviors (p<0.001).

The study also included questions about participants' exposure to information or training on sexual violence. Many students in the total sample reported being exposed monthly to information on sexual violence prevention online (44.13%). Most students, in both groups, reported having participated in Haven before this study (80.34%). Haven is the online sexual violence prevention program implemented by the university as a requirement for enrollment in courses for the Fall term. The majority of participants in both groups reported knowing someone who was a victim of sexual violence (62.87%); however, only 24.60% reported knowing someone who had been a perpetrator. The demographic characteristics of the study sample can be found in Table 3.2, overall and by group, as well as the statistical significance of differences in proportions between groups.

Table 3.2

Sample Characteristics and Statistically Significant t-test between Groups.

	Intervention		Comparison		Total Sample	
	n	%	n	%	n	%
N	484		386		870	
Age						
Under 18	11	2.27	15	3.89	26	2.99
18 – 19	473	97.73	371	96.11	844	97.01
Missing						
Gender						
Men	215	44.42	214	55.44**	429	49.31
Women	269	55.58	172	44.56**	441	50.69
Race-Ethnicity						
American Indian/Alaska Native	3	0.62	3	0.78	6	0.69
Asian	19	3.93	57	14.77***	76	8.74
Black	12	2.48	12	3.11	24	2.76
Hispanic	32	6.61	44	11.40*	76	8.74

	Intervention		Comparison		Total Sample	
Native Hawaiian/Pacific	8	1.65	4	1.04	12	1.38
White, Non-Hispanic	410	84.71	266	68.92***	676	77.70
Education of the Father						
Less than high school	10	2.07	29	7.51**	39	4.48
High school graduate	59	12.19	58	15.03	117	13.45
Some College	77	15.91	73	18.91	150	17.24
Bachelor's degree	225	46.49	127	32.90***	352	40.46
Advanced Degree	111	22.93	97	25.13	208	23.91
Education of the Mother						
Less than high school	5	1.03	23	5.96***	28	3.22
High school graduate	41	8.47	36	9.33	77	8.85
Some College	99	20.45	81	20.98	180	20.69
Bachelor's degree	242	50.00	145	37.56***	387	44.48
Advanced Degree	96	19.83	101	26.17*	197	22.64
Fraternity/Sorority Members						
Yes	484	100.00	29	7.51***	513	58.97
No	0	0.00	357	92.49***	357	41.03
Received SV information online						0.00
Never	51	10.54	52	13.47	103	11.84
Once a Year	76	15.70	70	18.13	146	16.78
Monthly	228	47.11	177	45.85	405	46.55
Weekly	112	23.14	80	20.73	192	22.07
Daily	17	3.51	7	1.81	870	100.00
Received information about Sexual Violence prevention in the past						
From a Friend	101	20.87	107	27.72	208	23.91
Haven	388	80.17	311	80.57	699	80.34
Relative	81	16.74	70	18.13	151	17.36
OSU Workshop	40	8.26	21	5.44	61	7.01
Someone at University	23	4.75	29	7.51	52	5.98
No	39	8.06	33	8.55	72	8.28
Know Someone who has been a victim of sexual violence						
Yes	321	66.32	226	58.55*	547	62.87
No	163	33.68	160	41.45	323	37.13
Know Someone who has been a perpetrator of sexual violence						
Yes	113	23.35	101	26.17	214	24.60
No	371	76.65	285	73.83	656	75.40
Party Attendance						
Never	19	3.93	156	40.41***	175	20.11

	Intervention		Comparison		Total Sample	
1-5 times a month	167	34.50	171	44.30**	338	38.85
6-10 times a month	198	40.91	42	10.88***	240	27.59
More than 10 times a month	100	20.66	17	4.40***	117	13.45

*p<0.05, **p<0.01, ***p<0.001

Examination of the Impact of the Intervention

The two hypotheses for Research Question 1 of this study stated that students who participated in BGAD would have significant positive effects on bystander intervention outcomes compared to those who did not participate. The intervention group was expected to show increased scores in bystander perceived behavioral control, positive bystander social norms, positive attitudes towards intervening, increased intention to intervene, lower rape myth acceptance and more bystander behaviors if they had the opportunity to intervene.

To verify if the groups differed significantly on any of the variables before the intervention, I used multivariate analysis of variance (MANOVA) to test differences between the two intervention groups on outcomes at pre-intervention. The outcomes included were perceived behavioral control, subjective norms, intention to intervene, attitudes towards intervening, and rape myth acceptance. The intervention group was the independent variable. Overall, the main effect for the intervention group on pre-intervention scores was not significant $F(1, 857) = 0.56$, $p>0.05$, $\Lambda= 0.97$. Thus, the groups did not significantly differ from one another on the outcomes measured at pre-intervention. Upon testing the effect of known covariates, I found there was an effect on party attendance $F(1, 852) = 3.017$, $p<0.05$, $\eta^2 = 0.017$, $\Lambda= 0.98$, on pre-intervention scores, and no effect for social desirability $F(1, 852) = 1.84$, $p>0.05$, $\eta^2 = 0.011$, $\Lambda= 0.99$, or cluster group $F(1, 852) = 0.77$, $p>0.05$, $\eta^2 = 0.005$, $\Lambda= 0.99$.

I assessed the correlation between social desirability bias in responses and primary outcomes by calculating Pearson correlations between scores for main outcomes and the scores on the Paulhus' Impression Management Scale (BIDR-IM) at pre-intervention. Table 3.3 presents

the results of these correlations. The correlations between measures and social desirability were low and non-significant.

I analyzed the intercorrelations among outcome measures for all pre-intervention participants to establish the independence of outcome measures. Table 3.3 presents the findings. Higher intention to intervene was related to higher positive attitudes towards intervening and perceived behavioral control of bystander intervention. Otherwise, correlations were low between measures.

Table 3.3

Intercorrelations between Outcome Measures at Pre-intervention.

Measure	1	2	3	4	5	6
1. Attitudes	0.56***					
2. Social Norms	0.56***					
3. PBC	0.53***	0.47***				
4. Intention	0.73***	0.59***	0.63***			
5. RMA	0.33***	0.30***	0.16**	0.36***		
6. Bystander Behaviors	0.32**	0.29**	0.10	0.36***	-0.18	
7. Social Desirability	-0.040	-0.11	-0.021	-0.073	0.0088	0.11

Note. N=870. PBC=perceived behavioral control, RMA= rape myth acceptance.
*p<0.05, **p<0.01, *** p<0.001, two-tailed significance.

Opportunities to Intervene

A higher proportion of participants reported having more opportunities to intervene at pre-intervention (54.60%) than at 3-month follow-up (35.10%), p=0.001 (see Table 3.4). Most participants reported having an experience where a friend who looked intoxicated was taken away from the group by someone with negative intentions, that they knew a friend who needed help or to talk with someone about an unwanted sexual experience, and that they heard a friend say they had an unwanted sexual experience even if they don't call it rape. The latter was the situation most often experienced by all participants. These results were true at both pre-intervention and 3-month follow-up.

I found a significant decrease in the three most common behaviors experienced by the participants between pre-intervention and 3-month follow up. Compared to pre-intervention, participants at 3-month follow up fewer of the following behaviors: *having experienced having an intoxicated friend being taken away with someone with negative intentions*, χ^2 (1, n=870)= 17.23, p<0.001, φ= 0.24; *having heard a friend say they had an unwanted sexual experience even if they don't call it rape*, χ^2 (1, n=870)= 45.44, p<0.001, φ= 0.40; and *having a friend who needed help or talk to someone about an unwanted sexual experience*, χ^2 (1, n=870)= 22.08, p=0.00, φ= 0.28, at 3-month follow up. The most common sexual violence-related experiences reported were those during and after an actual or potential sexually violent situation occurred. Also, these more commonly reported behaviors included both friends and others as the perpetrators or victims.

Table 3.4

Proportion of Participants who had the Opportunity to Intervene and Bystander Behaviors by Intervention Group.

	Pre-Intervention					
	Intervention		Comparison		All	
	n	%	n	%	n	%
No Opportunity	206	42.56	187	48.45	393	45.17
Had Opportunity	276	57.02	199	51.55	475	54.6
Had Opportunity and Intervened	141	51.09	118	59.30	259	54.52
Had Opportunity and No Intervention	97	35.14	77	38.69	174	36.63
N	484		386		870	
	3-Month Follow-up					
	Intervention		Comparison		All	
	n	%	n	%	n	%
No Opportunity	73	58.87	112	62.92	185	61.26
Had Opportunity	47	37.9	59	33.15	106	35.1
Had Opportunity and Intervened	29	61.70	39	66.10	68	44.11
Had Opportunity and No Intervention	12	25.53	18	30.51	30	28.3
N	124		178		302	

Note. Opportunity refers to a participant having experienced an actual or potentially violent situation; before, during, or after.

Gender and Opportunities to Intervene

Women reported having experienced the three most common behaviors previously mentioned above more than men, at pre-intervention. Compared to men, more women reported *having an intoxicated friend being taken away by someone with negative intentions* (65.6% vs. 34.4%), χ^2 (1, n=870) = 13.81, p=0.00, φ= 0.13. More women also reported *having heard a friend say they had an unwanted sexual experience even if they did not call it rape* when compared to men (61.5% vs. 38.5%), χ^2 (1, n=870) = 30.66, p=0.00, φ= 0.19. Finally, more women reported *having a friend who needed help or to talk to someone about an unwanted sexual experience* was significant (65.5% vs. 34.5%), χ^2 (1, n=870) = 23.99, p=0.00, φ= 0.17. There were no significant differences in the proportions of participants that experienced these behaviors between the intervention and comparison groups.

Intervention Group and Opportunities to Intervene

Participants in both groups reported having experienced a similar proportion of most of the eleven sexual violence situations measured. However, participants in the intervention group reported having experienced two situations more often than the comparison group. Compared to the comparison group, participants in the intervention group more commonly reported having *walked in on a friend who was having sex with an intoxicated person,* (71.8% vs. 28.2%), χ^2 (1, n=869) = 9.07, p<0.01, φ= 0.10, and having *walked in on someone who was having sex with a friend who was intoxicated,* (79.1% vs. 20.9%), χ^2 (1, n=869) = 10.11, p<0.001, φ= 0.11. The results show intoxication as common factor when theses participants witnessed sexual violence situations.

Impact of Intervention on Bystander Behaviors

For both groups, there was a higher proportion of students who reported having an opportunity to intervene and having intervened at 3-month follow up compared to pre-intervention (see Table 3.4). I found no significant difference in bystander intervention behaviors between pre-intervention and 3-month follow-up for the intervention group, χ^2 (1, 39) = 0.49, p>0.05, φ=0.11. There was a significant increase in bystander intervention behaviors between the two time points for the comparison group, χ^2 (1, 92) = 8.33, p<0.001, φ=0.27. A repeated-measures MANCOVA was performed to examine if there was a change in bystander behaviors over time from pre-intervention to 3-month follow-up. I included gender and cluster group as covariates. There was a main effect of time *F* (1, 468) =45.66, p<0.0001, η^2 = 0.09 CI (0.05 - 0.13), Λ= 0.91. Results did not show significant effects for the time by intervention group, time by group by gender, or time by group by cluster. These results indicate that the intervention did not have an effect on bystander behaviors over time, thus rejecting our first hypothesis.

Impact of the Intervention on Proximal Outcomes

I calculated mean scores for each of the measured proximal predictors of bystander behaviors. Table 3.5 presents descriptive statistics for all measures across the two time points of the study for all participants and by intervention group.

I used repeated measure multiple analysis of covariance (MANCOVA) to examine if there were significant effects of the intervention on any of the proximal outcomes. Intervention group and gender served as independent variables with five proximal outcomes. I included cluster group, party attendance, and social desirability as covariates. Maunchy's test of Sphericity for each of the factors in the model was significant p<0.05, thus sphericity was not assumed. I used Greenhouse-Geisser to determine if effects were significant. The results of analysis showed that there was no significant effect of cluster group, *F*(5, 264) =.458, p>0.05, η^2 =0.009 CI (0 -0.048), Λ= 0.99 and party attendance, *F*(5, 264) =1.33, p>0.05, η^2 =0.024 CI (0-0.045), Λ= 0.98. There

was a significant effect for gender, $F(5, 264) = 6.36$, $p<0.001$, $\eta^2 = 0.11$ CI (0.043-0.15), $\Lambda = 0.89$, and intervention group $F(5, 264) = 1.67$, $p<0.05$, $\eta^2 = 0.031$ CI (0-0.055), $\Lambda = 0.97$.

Although analyses revealed significant main effects, there was no significant time by intervention group interaction $F(10, 264) = 0.87$, $p>0.05$, $\eta^2 = 0.073$, $\Lambda = 0.98$. The time by gender interactions group $F(10, 264) = 1.87$, $p>0.05$, $\eta^2 = 0.067$ CI (0-0.084), $\Lambda = 0.93$, and time by intervention group by gender $F(10, 264) = 1.81$, $p>0.05$, $\eta^2 = 0.065$ CI (0-0.082), $\Lambda = 0.94$, interactions were not significant. Univariate analysis did not reveal any significant results for any of the outcomes evaluated.

Table 3.5

Means (SD) for Predictor Measures by Intervention Group and Time.

	Pre-intervention		Post-intervention		3-month follow up	
	Interven.	Compariso.	Intervention	Comparison	Intervention	Comparison
N	484	386	445	-	124	178
Measure						
Attitudes	6.38 (0.87)	6.38 (0.70)	6.73 (0.60)	-	6.41 (0.77)	6.30 (0.80)
SN	6.35 (0.95)	6.05 (1.01)	6.51 (0.87)	-	6.24 (0.99)	6.09 (1.14)
PBC	5.62 (1.00)	5.33 (1.12)	6.19 (0.97)	-	5.64 (1.00)	5.33 (1.24)
Intention	6.33 (0.86)	6.19 (0.80)	6.54 (0.70)	-	6.26 (0.88)	6.16 (0.90)
RMA	1.79 (0.65)	1.81 (0.60)	1.52 (0.85)	-	1.59 (0.72)	1.82 (0.82)

Note. SN=social norms, PBC=perceived behavioral control, RMA=rape myth acceptance.

To examine the main effects of the intervention, I performed paired sample t-test to evaluate changes in scores across groups. Table 3.6 presents the results of the analysis of changes in scores from pre- to post-intervention to see if there was a positive change in proximal outcomes for the intervention group.

Table 3.6

Paired Sample t-tests for Pre-intervention to Post intervention for the Intervention Group only.

	Pre-Post intervention	
Outcome	Mean difference	t
Attitude	0.35 (0.55)	9.15***
SN	0.16 (0.62)	6.34***
PBC	0.57 (0.72)	11.88***
Intention	0.21 (0.54)	5.52***
RMA	-0.27 (0.63)	-6.74***

Note. N=124. *SN=social norms, PBC=perceived behavioral control, RMS=rape myth acceptance* *p<0.05, **p<0.01, *** p<0.001

The results showed there was a significant increase in bystander positive attitudes, social norms, perceived behavioral control, and intention to intervene. Also, there was a significant decrease in the acceptance of rape myths. These results were in the expected direction of hypotheses 2 to 6, in that there was a significant positive increase of these proximal factors.

Table 3.7 shows the results of paired t-tests for pre-intervention to 3-month follow up for the two groups. There were no significant changes in outcomes over time for either group. The results show that the intervention had an immediate effect after follow-up, but these effects did not persist over time.

Table 3.7

Paired Sample t-Tests for Pre-intervention to 3-month follow-up for Each Intervention Group.

	Comparison (N=178)		Intervention (N=174)	
Outcome	Mean difference	t	Mean difference	t
Attitude	-0.078 (0.94)	9.15	0.030 (0.93)	-1.21
SN	0.012 (0.90)	6.34	-0.11 (1.06)	-2.086
PBC	-0.022 (1.90)	11.88	0.020 (0.95)	-0.59
Intention	-0.045 (0.90)	5.52	-0.070 (0.94)	-2.35
RMA	0.015 (0.53)	6.74	-0.20 (0.63)	-1.15

*p<0.05, **p<0.01, *** p<0.001

The Effect of Gender

To examine more carefully the main effect of gender, I used a MANCOVA on pre-intervention outcome measures. I used social desirability as covariate.

Table 3.8

MANCOVA and Means (SD) for Pre-Intervention Outcome Scores by Gender.

	Male	Female	
Outcome	*N = 421*	*N = 440*	*F (1, 852)*
Attitude	6.21 (0.90)	6.55 (0.64)	40.84***
SN	5.92 (1.11)	6.40 (0.77)	56.03***
PBC	5.29 (1.20)	5.69 (0.96)	27.97***
Intention	6.043 (0.91)	6.48 (0.70)	64.29***
RMA	2.031 (0.66)	1.57 (0.50)	134.45***

Note. N=870. *p<0.05, **p<0.01, *** p<0.001, two-tailed significance.

There was a significant main effect for gender $F(5, 852) = 0.32.80$, $p<0.0001$, $\eta^2 = 0.16$ CI (0.12-0.19), $\Lambda = 0.84$, and no significant effect for social desirability $F(5, 852) = 0.87$, $p>0.05$, η^2

=0.010 (0-0.020), Λ= 0.99. Women had significantly higher scores for all proximal variables and a lower score for rape myth acceptance, when compared to men (see Table 3.8).

Impact of Predictors of Bystander Intervention on Bystander Behaviors

The second research question focused on examining whether changes in the proximal outcomes of bystander intervention behaviors predicted bystander behaviors over time, for those students who participated in the intervention (see Table 3.7). For this analysis, I utilized the difference in mean scores from pre-intervention to 3-month follow up. Results showed the model was not statistically significant χ^2 (5, n=98) = 27.40, p>0.05. The Hosmer and Lemeshow test was not statistically significant (p>0.05), indicating that the model is not a poor fit. The model explained 21.00% of the variance in bystander intervention behaviors and correctly classified 73.50% of cases. Sensitivity was 88.70%, specificity was 47.20%, positive predictive value was 74.32% and negative predictive value 70.83%. None of the five predictors considered in the model were statistically significant.

Students that did not participate in the 3-month follow up were more likely to be men χ^2 (1, n=870)= 24.73, p<0.001, be in a fraternity/sorority χ^2 (1, n=870)= 34.47, p<0.00, participate in parties more χ^2 (1, n=870)= 24.03, p<0.001, and reported fewer bystander intervention behaviors (p<0.001). Attrition analyses were performed to examine whether the students who did not participate in the three months follow up were on the lower end of the distribution of the outcomes measured. Analyses showed that indeed students who did not complete the 3 months follow up reported lower rape myth acceptance at base line than those who completed the 3-month follow up t=2.019, df=865, p<0.05. There were no differences in any other outcomes or proximal variables.

Discussion

This study makes valuable contributions to guide the development of effective sexual violence prevention programs to increase bystander behaviors among college students. Although

there is evidence that the Theory of Planned Behavior is a good model to predict bystander intervention, proximal outcomes, and behaviors (Hoxmeier et al., 2016; McMahon, Peterson, et al., 2015), studies have not utilized it fully as an evaluation framework. The findings of this study help extend the use of this framework and contribute to the literature on sexual violence experienced by college students.

There is evidence of the TPB as a good framework to predict bystander behaviors (Amar, Sutherland, & Laughon, 2014a; Austin et al., 2016; Bannon, Brosi, & Foubert, 2013; Foubert, 2013; Hoxmeier, 2015; Hoxmeier et al., 2016; McMahon, Peterson, et al., 2015), focusing on proximal variables that influence if a student would intervene. In this study, we measured the constructs for each of the proximal predictors, intention, and bystander behaviors. The framework was a good model to evaluate participants experiences on specific behaviors. In this study, we did not find a significant effect of the intervention on proximal predictive factors and bystander behaviors over time, when assessed for the three time points. However, when I considered only the intervention group, there was a significant immediate effect, but it did not last over time. There are some explanations to these results. Previous studies have found that the longer the program, the more significant the effects (Jouriles et al., 2018). Thus, boosters can be necessary to maintain the desired results (Banyard et al., 2018). Although, more and longer interventions are associated with increased bystander behaviors, the development and implementation of extensive bystander intervention programs can be difficult to sustain by colleges. There are multiple factors to consider: resources needed, reach of the intervention, target population, and content of the intervention. More research is needed to explore which booster interventions to implement, at what rate, and order. Some strategies proposed by other research are online interventions (Kleinsasser, Jouriles, McDonald, & Rosenfield, 2015), social marketing campaigns (Banyard et al., 2018), peer-to-peer strategies, and integration of these topics in the regular college curriculum (Anderson & Whiston, 2005; Banyard, 2015; Katz & Moore, 2013). These strategies can provide

extended interactions with students on bystander intervention topics. Some topics can be addressed by intervention programs to have an impact on bystander predictors and behaviors of the general population of students, but others need to target specific groups.

This study showed that opportunities to intervene were low at the time of the intervention. The intervention evaluated in this study was designed to be implemented during the fall term to mostly first-year students, as recommended by the literature to be an adequate time to intervene due to higher incidence of assaults during this period (Flack et al., 2008). Also, students at the beginning of their college experience may not be able to evaluate their likelihood to intervene or have formed their beliefs about intervening if they witnessed a sexually violent situation. Hence, students may overestimate their willingness to intervene and attitudes towards intervening. These results suggest that students' experiences, both opportunities to intervene and bystander behaviors, need to be studied under behavior change frameworks with longitudinal methods; that consider student's experiences over time.

In this study, 51% of students who participated in the intervention reported having the opportunity to intervene and taken an action before the pre-intervention and 62% reported having intervened in the three months before the follow up; an increase of 11%. Similarly, students in the comparison group reported an increase on intervention behaviors from pre intervention (59%) to three months follow up (66%), an increase of 7%. These results indicate that the combined efforts of the intervention and other campus activities may have had an impact on bystander behaviors. However, from this study it is unclear how much impact had BGAD to increase bystander behaviors. Other evaluation studies of this intervention should consider incorporating qualitive designs to understand the behaviors of both intervention and comparisons groups in follow up to understand more specifically which strategies influenced increasing bystander behaviors. Also, students' developmental and cognitive processes should be envaulted. It may be possible that students had less agency and maturity to intervene while in high school; and that the college

experiences as independent actors may influence their perceived behavioral control to intervene when witnessing an assault.

The results of this study indicate that interventions need to target a broader culture of drinking and the type of experiences where a student could intervene. For both the intervention and comparison groups, students reported experiencing more opportunities to intervene before and after an assault, consistent with previous studies (Hoxmeier, 2015; Hoxmeier et al., 2016). However, compared to the comparison group, students in the intervention group did report having witnessed an assault. Of the reported experiences, a common factor was the victim being "intoxicated." The findings suggest that students are more likely to witness mid-assault sexually violent situations when alcohol is present. This result is consistent with previous research linking alcohol to victimization (Jouriles et al., 2018; Ullman & Ullman, 2016). BGAD addresses the role of alcohol as a continuum of shared responsibility, shying away from victim blaming due to intoxication or excusing violent behaviors due to alcohol inhibition. However, students are less likely to intervene in mid-assault situations (Hoxmeier et al., 2016), and thus more research should study specific mid-assault bystander behaviors where alcohol is present. Studies should also extend the understanding of the role of alcohol when bystanders are also under the influence of alcohol as they witness an actual or potential act of sexual violence. This is especially important in college settings because most students in their first year of college are under the legal age limit for alcohol consumption, thus they may face more barriers to seeking help. Although, mid- assault interventions can be more complex to manage, especially when alcohol is involved, prevention programs should increase their focus in this area and find strategies that provide increase positive attitudes and perceived behavioral control in these specific types of situations. More research is needed to understand potential barriers and factors that influence students' attitudes and subjective norms during these specific situations.

The current study found interesting results of gender-specific experiences of sexual violence and scores on the TPB variables that predict bystander behaviors. In this study, women had higher scores for all proximal variables and reported less myth acceptance when compared to men. The existing literature on this topic has mixed results. Some studies have found men to have a higher intention to intervene than women and found them more likely to intervene (Amar et al., 2014a). In this study, women are more likely than men to intervene in post-assault situations to support a friend who wants to get help or that is unsure if they were a victim. However, there were no differences found for other items. Previous research on gender differences on bystander intention and behaviors need to be reconsidered due to recent events that could have changed women's perceived behavioral control over intervening in high risk situations and the norms associated to sexual assault. In the past two years, women have been more likely to come forward publicly to report experiences of victimization that resulted in many men, in positions of power, have been prosecuted by law or boycotted. These have been high profile movements that have persisted years after and enforce massively that sexual violence is consequential, and that people should not be scared to come forward because they will be supported. These events can make a shift in students' beliefs towards sexual violence and intervening itself, reconsider what are acceptable behaviors and the norms associated with them. These environmental factors can influence the role of women and men as bystanders (McMahon, 2015a). Thus, future research should consider the impact of these events in both women and men's role as bystanders.

The results of this study suggest that there are several factors that could have impacted the effectiveness of this intervention. For example, this intervention focused on multiple immediate outcomes. Reducing the scope of the intervention and focusing on activities that impact immediate outcomes that improve students' attitudes towards intervening could be more impactful. Also, the intervention should be implemented in other settings outside the college to provide a context that is more comfortable to students and detaches the institutional from the

personal. In this study we found that mid-assault experiences when alcohol was present are an important area of focus. However, this intervention only addressed alcohol as a contextual factor and not on specific strategies to manage these situations. The intervention may benefit from extending the focus on changing perceptions on the risks of intervening and providing tools to manage high risk situations.

Limitations

This study has its limitations. Studies that rely on recall of the participant memory on experiences and self-report of their attitudes and beliefs are subject to social desirability bias and accuracy issues (Grimes et al., 2002; Bradburn, et al. 1987). To mitigate these factors, we included a measure of social desirability to control for this effect and kept the recall to a period of length of 3-months. However, the social desirability measures are not sufficient to understand the reactivity of students' answers to the instrument utilized in this study. Particularly there may be increased motivation of students to provide socially desirable responses by students from student organizations that have been reported to have higher risk behaviors, as some fraternities. To address this issue, I gave students enough time to review the behaviors and was specific to the confidentiality efforts in place to protect their identity. It is important to note that recall of bystander behaviors during pre-intervention tests had a longer period of recall, where students were asked to remember any experience in the past and asked to recall in the past 3-months for the 3 months follow up. Extending the range of time between intervention and follow up assessment would allow for better understanding of students' experiences. Additionally, the experience with and attitudes toward bystander intervention during high school could influence bystander behaviors in college. The two contexts, high school and college, must be considered in future studies as a continuum were past experiences shape bystander behaviors during the first months in college, but potentially change over time. More research should extend the study of

bystander intervention to understand motivators of bystanders during high school and how they are different in these to contexts warrant further study.

The instrument used in this study asked about specific behaviors, with descriptions that do not necessarily convey the nuances and definitions of violent experiences. At the same time, the structured instrument limited the ability to capture all intervention behaviors experienced by the participants fully. To reduce the impact of students' different definitions of what a sexually violent event is, the instrument first asked about them having experienced a situation, and if they answered "yes," they were asked what they did in the situation. Also, the original SAAB-Q was modified to be gender-neutral, thus being more inclusive of the victims' and perpetrators' genders. The intervention under study was implemented in the first weeks of students' first year in college thus limiting the amount of opportunities students had to intervene while in college. It would be of interest to increase understanding of bystander behaviors and its predictors while in high school to account to their contribution to bystander intervention predictors and outcomes. Most of the bystander intervention programs implemented to date have been done on colleges (McMahon et al., 2015) and those intervention implemented on high schools more recently were developed specifically for college students (Cocker et al., 2019). Differentiating between the predictors and behaviors in a high school context and that of college could impact how we measure and study bystander intervention programs. Then there is the issue of timing of the interventions. Most bystander intervention programs are implemented in the first weeks of college due to the high prevalence of reported sexual violence during the first months in college. Thus, to evaluate these interventions with robust research designs may come with an ethical consideration, since it would not be ideal not to offer these interventions on the right time to a high-risk population. Thus, other solutions may need to be considered. One potential solution is to compare students from one college that is implementing a bystander intervention program with one that is not from a similar demographic. The limitation is that the comparison groups may be

too different. Also, controlling the implementation of other sexual violence prevention programs that could contaminate the results could be more difficult. Another approach to consider is to utilize a mixed-method approach were the quantitative measures to identify predictors of bystander behaviors are also complemented with in depth understanding of the experiences of students before college and after college. Also, this design can increase identification of which activities, like identifying barriers, and targeting outcomes, like attitudes and perceived behavioral control, have been impacted by the intervention. These strategies are resources intensive and require long periods of follow up making them less feasible in most university context. Future research can explore how we can better measure bystander behaviors over longer periods of time as part of evaluation efforts with research designs that consider the range of time available for students to have college experiences and understand changes in the factors that predict these behaviors after starting college.

The quasi-experimental research design with convenience sample that was used in this study limited the generalizations that can be made from the results of the study. Due to limitations of sample size we were unable to implement a matching strategy on key demographic characteristics and outcomes. This study was conducted utilizing a sample of students from student organizations that had already been scheduled to participate in BGAD. The college had already assigned resources to implement the intervention to these groups, providing an opportunity to evaluate BGAD under typical conditions. Sexual violence prevention programs are designed to target students before there is a higher prevalence of violence on college campuses, which is within the first year. Thus, making it difficult to have a real control group for those high-risk groups targeted by these interventions. The evaluation of sexual violence prevention programs in normal conditions limits the ability to collect data on specific behaviors at pre intervention with only a couple of weeks of starting college and limiting understanding of critical socio-cognitive changes during that transition from high school to college. The evaluation of this

program was limited by a short period of time for students to have developed experiences related to sexual violence and helping behaviors. Future research should explore the use of research designs that can be implemented in normal settings, utilizing the available resources, however considering changes on students' precursors to behaviors (e.g., attitudes towards intervening), helping behaviors, developmental changes, experiences, and changing contextual factors that have an influence in bystander intervention behaviors over time. . How we evaluate bystander intervention programs have to consider the ethical consequences of the research designs. Although, there may be no evidence of the effectiveness of the program it might be more ethical to implement the intervention the first weeks of college and not prevent students from having the tools during high risk period of college to implement an evaluation with a robust design. However, another argument can be that implementing an intervention with unknown effectiveness and assuming a positive impact might also be reconsidered. This line of research is important since there are ethical considerations to try to implement sexual violence prevention programs on a later time and limit their preventive impact during the period of most prevalence of these risk behaviors.

Compared to the comparison group, participants in the intervention group were more likely to be in a fraternity/sorority and partied more where alcohol was present. To address this, I included in the multigroup analyses the characteristics of the participants that could impact the generalizability of the results. Also, I took steps to identify the potential effects of these variables at pre-intervention and included them in analyses. A cluster group variable was introduced to consider the influence of students' participation in the study in different rooms during a period of two weeks. However, this variable did not consider students' specific fraternity and sorority houses which could have affected the results, since students might have shared their experiences with other fraternity or sorority students within the week of the intervention. Although known confounding variables were collected, there are other influencing factors for which I did not

control. A factor not considered was that during the time of data collection the topic of sexual violence was often on the news reporting high profile cases of sexual violence; during this time, the #metoo movement was initiated, and other sexual violence prevention campaigns were popular in social media.

This study had sample limitations since only 35% of the eligible sample at pre-intervention completed the 3-month follow up. In this study, I asked students to complete the 3-month follow up online. I submitted a link by email and gave an incentive for participation. Analysis showed that participants who were male, partied more, were in a fraternity and sorority and reported less bystander behaviors at pre-intervention were less likely to participate in follow-up. These participants are more difficult to engage, thus more targeted data collection methods need to be explored. Methods to consider in future research are higher incentives to participate in follow ups, engagement strategies to participate in the study and interventions, and anonymity or confidentiality strategies to reduced social desirability bias. It is possible that the low response rate at follow up might be due to students not having enough motivation to participate in the follow up or that the email was not distinctive from other university communications. Additionally, during the time of data collection there was a lot of media coverage on the topic of sexual violence and prosecution of high profile perpetrators. This may have influenced specific demographics to refrain from participating in the study due to low confidence on the confidentiality of the responses. These limitations could have affected our sample since the subset of students who completed the 3-month follow up may be different than those who did not complete. It is possible that the findings of this study were affected by the low sample due to loss of power to detect an effect.

Analysis of attrition showed that those students who did not complete the three months follow up were male, from fraternities, partied more, and reported higher acceptance of rape myths at baseline. This result is important to consider when interpreting the results of the

intervention since we might have not found an effect of the intervention on lowering the acceptance of rape myths due to a celling effect, making it difficult for the results to show differences in the intervention. However, these analyses showed that both groups had similar mean scores at pre-intervention.

The student population at this college was ethnically homogeneous, with mostly white non-Hispanic students, which limits the generalization of findings to other race/ethnic groups. Recent studies have found that there are no significant differences in bystander behaviors by race/ethnicity (Hoxmeier, O'Connor, & McMahon, 2018), but have found significant differences in experiences of sexual violence, bystander attitudes towards intervening, and bystander intention to intervene (Burn, 2009; Hoxmeier et al., 2018; Burns, Eaton, Long, & Zapp, 2018). The findings of this study should be replicated with a more diverse population, considering re-validation of the data collection tool and specific variations of experiences of the most prevalent minority groups. More importantly, although research on bystander behaviors of specific minority groups is scarce, bystander intervention programs implemented on college campuses should include representatives of these minority groups in the development of prevention efforts at colleges, ensuring relevance and participation, and addressing sexual violence experienced by non-White students.

Despite the limitations, the current study contributes to the literature on interventions addressing bystander behaviors, and it provides essential information to practitioners working on sexual violence prevention programs on college campuses. Although the results of the evaluation did not show a significant effect of the intervention, it provides evidence of areas of potential development to improve outcomes. This study provides a further understanding of the complexities of these experiences and the factors influencing bystander behaviors.

References

Ajzen, I. (1985). From intentions to actions: A theory of planned behavior. In P. D. J. Kuhl & D. J. Beckmann (Eds.), *Action Control* (pp. 11–39). https://doi.org/10.1007/978-3-642-69746-3_2

Ajzen, I. (1991). The theory of planned behavior. *Organizational Behavior and Human Decision Processes*, *50*(2), 179–211. https://doi.org/10.1016/0749-5978(91)90020-T

Ajzen, I. (2002a). Perceived behavioral control, self-efficacy, locus of control, and the theory of planned behavior. *Journal of Applied Social Psychology*, *32*(4), 665–683.

Ajzen, I. (2002b). Residual effects of past on later behavior: Habituation and reasoned action perspectives. *Personality and Social Psychology Review*, *6*(2), 107–122. https://doi.org/10.1207/S15327957PSPR0602_02

Ajzen, I., & Fishbein, M. (1980). *Understanding attitudes and predicting social behavior.* Englewood Cliffs, NJ: Prentice-Hall.

Amar, A. F., Sutherland, M., & Laughon, K. (2014). Gender differences in attitudes and beliefs associated with bystander behavior and sexual assault. *Journal of Forensic Nursing*, *10*(2), 84–91; quiz E1-2. https://doi.org/10.1097/JFN.0000000000000024

Anderson, C. (2001). Defining the severity of workplace violent events among medical and non-medical samples. A pilot study. *Gastroenterology Nursing: The Official Journal of the Society of Gastroenterology Nurses and Associates*, *24*(5), 225–230.

Anderson, L. A., & Whiston, S. C. (2005). Sexual assault education programs: A meta-analytic examination of their effectiveness. *Psychology of Women Quarterly*, *29*(4), 374–388.

Austin, M. J. M., Dardis, C. M., Wilson, M. S., Gidycz, C. A., & Berkowitz, A. D. (2016). Predictors of sexual assault-specific prosocial bystander behavior and intentions: A prospective analysis. *Violence Against Women*, *22*(1), 90–111. https://doi.org/10.1177/1077801215597790

Baker, M. R., Frazier, P. A., Greer, C., Paulsen, J. A., Howard, K., Meredith, L. N., … Shallcross, S. L. (2016). Sexual victimization history predicts academic performance in college women. *Journal of Counseling Psychology*. https://doi.org/10.1037/cou0000146

Bandura, A. (1986). *Social foundations of thought and action: A social cognitive theory*. Englewood Cliffs, NJ: Prentice-Hall.

Bannon, R. S., Brosi, M. W., & Foubert, J. D. (2013). Sorority women's and fraternity men's rape myth acceptance and bystander intervention attitudes. *Journal of Student Affairs Research & Practice*, *50*(1), 72–87. https://doi.org/10.1515/jsarp-2013-0005

Banyard, V. L. (2008). Measurement and correlates of prosocial bystander behavior: The case of interpersonal violence. *Violence and Victims*, *23*(1), 83–97. https://doi.org/10.1891/0886-6708.23.1.83

Banyard, V. L. (2015). *Toward the next generation of bystander prevention of sexual and relationship violence: Action coils to engage communities*. Retrieved from https://books.google.com/books?hl=en&lr=&id=53-BCgAAQBAJ&oi=fnd&pg=PP7&dq=+%22Social+Media%22+and+%22Social+Networking%22+and+%22Sexual+violence%22+and+%22Bystander+intervention%22&ots=K5e0KJFWzN&sig=MPFNqk2ZqRtZZ-7FRe50nkQzRKY

Banyard, V. L., & Moynihan, M. M. (2011). Variation in bystander behavior related to sexual and intimate partner violence prevention: Correlates in a sample of college students. *Psychology of Violence*, *1*(4), 287–301. https://doi.org/10.1037/a0023544

Banyard, V. L., Moynihan, M. M., & Plante, E. G. (2007). Sexual violence prevention through bystander education: An experimental evaluation. *Journal of Community Psychology*, *35*(4), 463–481. https://doi.org/10.1002/jcop.20159

Banyard, V. L., Plante, E. G., & Moynihan, M. M. (2004). Bystander education: Bringing a broader community perspective to sexual violence prevention. *Journal of Community Psychology*, *32*(1), 61–79.

Banyard, V., Potter, S. J., Cares, A. C., Williams, L. M., Moynihan, M. M., & Stapleton, J. G. (2018). Multiple sexual violence prevention tools: Doses and boosters. *Journal of Aggression, Conflict and Peace Research*. https://doi.org/10.1108/JACPR-05-2017-0287

Barnett, M. D., Sligar, K. B., & Wang, C. D. C. (2016). Religious affiliation, religiosity, gender, and rape myth acceptance: Feminist theory and rape culture. *Journal of Interpersonal Violence*. https://doi.org/10.1177/0886260516665110

Batson, C. D. (1994). The unresponsive bystander: Why doesnt he help? *Contemporary Psychology*, *39*(10), 941–943.

Brown, A. L., Banyard, V. L., & Moynihan, M. M. (2014). College students as helpful bystanders against sexual violence: Gender, race, and year in college moderate the impact of perceived peer norms. *Psychology of Women Quarterly*, *38*(3), 350–362. https://doi.org/10.1177/0361684314526855

Burn, S. (2009). A Situational model of sexual assault prevention through bystander intervention. *Sex Roles*, *60*(11–12), 779–792. https://doi.org/10.1007/s11199-008-9581-5

Burt, M. R. (1980). Cultural myths and supports for rape. *Journal of Personality and Social Psychology*, *38*(2), 217–230. https://doi.org/10.1037/0022-3514.38.2.217

Buzi, R. S., Tortolero, S. R., Roberts, R. E., Ross, M. W., Markham, C. M., & Fleschler, M. (2003). Gender differences in the consequences of a coercive sexual experience among adolescents attending alternative schools. *The Journal of School Health*, *73*(5), 191–196.

Cares, A. C., Banyard, V. L., Moynihan, M. M., Williams, L. M., Potter, S. J., & Stapleton, J. G. (2015). Changing attitudes about being a bystander to violence: Translating an in-person sexual violence prevention program to a new campus. *Violence Against Women*, *21*(2), 165–187. https://doi.org/10.1177/1077801214564681

DeGue, S. (2014). *Preventing sexual violence on college campuses: Lessons from research and practice*. Retrieved from http://www.councilofpresidents.org/docs/CampusSA/meeting3_10_14_15/PreventingSVonCollegeCampuses.pdf

DeGue, S., Valle, L. A., Holt, M. K., Massetti, G. M., Matjasko, J. L., & Tharp, A. T. (2014). A systematic review of primary prevention strategies for sexual violence perpetration. *Aggression and Violent Behavior*, *19*(4), 346–362. https://doi.org/10.1016/j.avb.2014.05.004

Fishbein, M., & Ajzen, I. (1975). *Belief, attitude, intention, and behavior: An introduction to theory and research*. Reading, MA: Addison-Wesley PubCo.

Fisher, B. S., Cullen, F. T., & Turner, M. G. (2000). *The sexual victimization of college women. Research Report.* Retrieved from http://eric.ed.gov/?id=ED449712

Flack, W. F., Caron, M. L., Leinen, S. J., Breitenbach, K. G., Barber, A. M., Brown, E. N., … Stein, H. C. (2008). "The red zone": Temporal risk for unwanted sex among college students. *Journal of Interpersonal Violence*, *23*(9), 1177–1196. https://doi.org/10.1177/0886260508314308

Flay, B. R., Snyder, F., & Petraitis, J. (2009). The theory of triadic influence. *Emerging Theories in Health Promotion Practice and Research*, *2*, 451–510.

Foubert, J. D. (2013). Integrating religiosity and pornography use into the prediction of bystander efficacy and willingness to prevent sexual assault. *Journal of Psychology & Theology*, *41*(3), 242–251.

Garcia-Moreno, C., Jansen, H. A., Ellsberg, M., Heise, L., Watts, C. H., & others. (2006). Prevalence of intimate partner violence: Findings from the WHO multi-country study on women's health and domestic violence. *The Lancet*, *368*(9543), 1260–1269.

Hahn, C. K., Morris, J. M., & Jacobs, G. A. (2016). Predictors of bystander behaviors and sexual assertiveness among college women attending a sexual assault prevention program: Bystander behaviors and sexual assertiveness. *Journal of Community Psychology*. https://doi.org/10.1002/jcop.21877

Hayes, R. M., Abbott, R. L., & Cook, S. (2016). It's her fault: Student acceptance of rape myths on two college campuses. *Violence Against Women*, *22*(13), 1540–1555. https://doi.org/10.1177/1077801216630147

Hoxmeier, J. C. (2015). *Students as pro-social bystanders: Opportunities, past behaviors, and intentions to intervene in sexual assault risk situations*. Retrieved from http://ir.library.oregonstate.edu/xmlui/handle/1957/55789

Hoxmeier, J. C., Acock, A. C., & Flay, B. R. (2017). Students as prosocial bystanders to sexual assault: Demographic Correlates of intervention norms, intentions, and missed opportunities. *Journal of Interpersonal Violence*, 0886260517689888. https://doi.org/10.1177/0886260517689888

Hoxmeier, J. C., Flay, B. R., & Acock, A. C. (2016). Control, norms, and attitudes: Differences between students who do and do not intervene as bystanders to sexual assault. *Journal of Interpersonal Violence*. https://doi.org/10.1177/0886260515625503

Jewkes, R. (2002). Intimate partner violence: Causes and prevention. *The Lancet*, *359*(9315), 1423–1429.

Jordan, J. B. (2011). *Examining the effects of two sexual assault/date rape interventions in a population of college freshmen.* ProQuest Information & Learning.

Jouriles, E. N., Krauss, A., Vu, N. L., Banyard, V. L., & McDonald, R. (2018). Bystander programs addressing sexual violence on college campuses: A systematic review and meta-analysis of program outcomes and delivery methods. *Journal of American College Health*, *66*(6), 457–466. https://doi.org/10.1080/07448481.2018.1431906

Katz, J., & Moore, J. (2013). Bystander education training for campus sexual assault prevention: An initial meta-analysis. *Violence and Victims*, *28*(6), 1054–1067.

Kleinsasser, A., Jouriles, E. N., McDonald, R., & Rosenfield, D. (2015). An online bystander intervention program for the prevention of sexual violence. *Psychology of Violence*, *5*(3), 227–235. https://doi.org/10.1037/a0037393

Krebs, C. P., Lindquist, C. H., Berzofsky, M., Shook-Sa, B., & Peterson, K. (2016). *Campus climate survey validation study final technical report*. Retrieved from Bureau of Justice Statistics website: https://www.bjs.gov/content/pub/pdf/ccsvsftr.pdf

Labhardt, D., Holdsworth, E., Brown, S., & Howat, D. (2017). You see but you do not observe: A review of bystander intervention and sexual assault on university campuses. *Aggression and Violent Behavior*, *35*, 13–25. https://doi.org/10.1016/j.avb.2017.05.005

Langhinrichsen-Rohling, J., Foubert, J. D., Brasfield, H. M., Hill, B., & Shelley-Tremblay, S. (2011). The Men's Program: Does it impact college men's self-reported bystander efficacy and willingness to intervene? *Violence Against Women*, *17*(6), 743–759. https://doi.org/10.1177/1077801211409728

Latané, B., & Darley, J. M. (1970). *The unresponsive bystander: Why doesn't he help?* New York: Appleton-Century Crofts.

Littleton, H., Grills - Taquechel, A., & Axsom, D. (2009). Impaired and incapacitated rape victims: Assault characteristics and post-assault experiences. (Author abstract) (Report). *Violence and Victims*, *24*(4), 439–457. https://doi.org/10.1891/0886-6708.24.4.439

Lonsway, K. A., & Fitzgerald, L. F. (1994). Rape myths in review. *Psychology of Women Quarterly*, *18*(2), 133–164.

Mcfarlane, J., Malecha, A., Watson, K., Gist, J., Batten, E., Hall, I., & Smith, S. (2005). Intimate partner sexual assault against women: Frequency, health consequences, and treatment outcomes. *Obstetrics & Gynecology*, *105*(1), 99–108. https://doi.org/10.1097/01.AOG.0000146641.98665.b6

McMahon, S. (2010). Rape myth beliefs and bystander attitudes among incoming college students. *Journal of American College Health: J of ACH*, *59*(1), 3–11. https://doi.org/10.1080/07448481.2010.483715

McMahon, S. (2015). Call for research on bystander intervention to prevent sexual violence: The role of campus environments. *American Journal of Community Psychology*, *55*(3–4), 472–489. https://doi.org/10.1007/s10464-015-9724-0

McMahon, S., Allen, C. T., Postmus, J. L., McMahon, S. M., Peterson, N. A., & Lowe Hoffman, M. (2014). Measuring bystander attitudes and behavior to prevent sexual violence. *Journal of American College Health*, *62*(1), 58–66. https://doi.org/10.1080/07448481.2013.849258

McMahon, S., & Banyard, V. L. (2012). When can I help? A conceptual framework for the prevention of sexual violence through bystander intervention. *Trauma, Violence & Abuse*, *13*(1), 3–14. https://doi.org/10.1177/1524838011426015

McMahon, S., & Farmer, G. L. (2011). An updated measure for assessing subtle rape myths. *Social Work Research*, *35*(2), 71–81. https://doi.org/10.1093/swr/35.2.71

McMahon, S., Peterson, N. A., Winter, S. C., Palmer, J. E., Postmus, J. L., & Koenick, R. A. (2015). Predicting bystander behavior to prevent sexual assault on college campuses: The role of self-efficacy and intent. *American Journal of Community Psychology*, *56*(1–2), 46–56. https://doi.org/10.1007/s10464-015-9740-0

Muehlenhard, C. L., Peterson, Z. D., Humphreys, T. P., & Jozkowski, K. N. (2017). Evaluating the one-in-five statistic: Women's risk of sexual assault while in college. *The Journal of Sex Research*, *54*(4–5), 549–576. https://doi.org/10.1080/00224499.2017.1295014

Paulhus, D. L. (1984). Two-component models of socially desirable responding. *Journal of Personality and Social Psychology*, *46*(3), 598.

Payne, D. L., Lonsway, K. A., & Fitzgerald, L. F. (1999). Rape myth acceptance: Exploration of its structure and its measurement using the Illinois Rape Myth Acceptance Scale. *ResearchGate*. Retrieved from https://www.researchgate.net/publication/230801415_Rape_Myth_Acceptance_Exploration_of_Its_Structure_and_Its_Measurement_Using_the_Illinois_Rape_Myth_Acceptance_Scale

Rhodes, R. E., Blanchard, C. M., & Matheson, D. H. (2006). A multicomponent model of the theory of planned behaviour. *British Journal of Health Psychology*, *11*(1), 119–137.

Shaw, J., & Janulis, P. (2016). Re-evaluating sexual violence prevention through bystander education. *Journal of Interpersonal Violence*, *31*(16), 2729–2750. https://doi.org/10.1177/0886260515580365

Smith, S. G., Chen, J., Basile, K. C., Gilbert, L. K., Merrick, M., Patel, N., … Jain, A. (2017). *The National Intimate Partner and Sexual Violence Survey (NISVS): 2010-2012 state report*. Atlanta, GA: National Center for Injury Prevention and Control, Centers for Disease Control and Prevention.

Steinmetz, H., Knappstein, M., Ajzen, I., Schmidt, P., & Kabst, R. (2016). How effective are behavior change interventions based on the theory of planned behavior? *Zeitschrift Für Psychologie*. Retrieved from http://econtent.hogrefe.com/doi/full/10.1027/2151-2604/a000255

Trafimow, D., Sheeran, P., Conner, M., & Finlay, K. A. (2002). Evidence that perceived behavioural control is a multidimensional construct: Perceived control and perceived difficulty. *British Journal of Social Psychology*, *41*(1), 101–121.

Ullman, U., & Ullman, S. (201206). Problem drinking and drug abuse in women sexual assault survivors: Role of trauma history, coping, and PTSD. *Alcoholism-Clinical and Experimental Research*, *36*, 215A-215A.

World Health Organization (WHO). (2013). *Global and regional estimates of violence against women: Prevalence and health effects of intimate partner violence and non-partner sexual violence*. Retrieved from https://books.google.com/books?hl=en&lr=&id=ZLMXDAAAQBAJ&oi=fnd&pg=PP1&dq=sexual+violence+world+statistics&ots=eYhbKb_efx&sig=2Tomzkj9eUvEJs23CLMzIIcFf9U

Yeater, E. A., Treat, T. A., Viken, R. J., & McFall, R. M. (2010). Cognitive processes underlying women's risk judgments: Associations with sexual victimization history and rape myth acceptance. *Journal of Consulting and Clinical Psychology*, *78*(3), 375–386. https://doi.org/10.1037/a0019297

CHAPTER 4: CONCLUSION

Summary of Findings

The purpose of the current study was to examine the Theory of Planned Behavior (TPB) as a framework to predict bystander intervention behaviors to prevent sexual violence among first-year college students and evaluate a bystander intervention program utilizing this framework. To execute this study, I used a quasi-experimental design with a comparison and intervention group. A convenience sample of students was invited to participate in the study. A modified version of the questionnaire SABBQ was used to measure the TPB proximal variables and bystander behaviors. The final study sample was of 870 participants who completed the pretest, and 302 who completed both pretest and three-month follow-up.

In the first manuscript, I aimed to model the TPB to predict bystander behaviors. I hypothesized that bystander intervention attitudes, subjective norms, and perceived behavioral control predict intentions to intervene, and both intentions to intervene and perceived behavioral control predict bystander intervention behaviors at pretest and bystander behaviors at 3-month follow up. I found that the TPB is an excellent model to predict bystander intentions to intervene and bystander behaviors at pretest. However, the theory has limited focus on cognitive and environmental factors that are important to be considered on the evaluation of theoretical frameworks to understand bystander behaviors. In this study, I found that bystander attitudes towards intervening played an essential role in predicting bystander behaviors compared to other predictors. I also found that the predictors of the TPB did not predict bystander behaviors at 3-month follow up. Bystander perceived behavioral control nor intentions to intervene were significantly associated with bystander behaviors over time.

In the second manuscript, I evaluated the effect the bystander intervention program Beavers Give A Dam had on bystander behaviors at 3-month follow up, utilizing the TPB framework. I hypothesized that students who participated in BGAD would have positive changes

in attitudes, perceived behavioral control, and subjective norms towards intervening and increased bystander behaviors over time, compared to the comparison group. I found there was no effect of the intervention. I found a main effect of gender, with women reporting higher attitudes, perceived behavioral control, intention to intervene, and subjective norms, and lower rape myth acceptance compared to men.

Future Research Directions

The evidence in this study suggests that bystander intervention research would benefit from utilizing the TPB as a framework to predict bystander behaviors. There are other factors that the literature has found to be antecedents of the proximal factors under the TPB; thus, future research should look at extending the TPB model considering those factors. For example, culture, rape myth acceptance, and previous experiences as bystanders. This study found that attitudes play a significant role in bystander intentions to intervene and bystander behaviors. There is a need to explore how attitudes towards intervening influence behaviors and potentially directly impact bystander behaviors. Moreover, future studies should explore the structural relationships of the TPB further by including analyses for pre-assault, mid-assault, and post-assault intervention. This study showed trends specific to students experiencing mid-assault situations that can be considered differently at the time to intervene. Especially, the reported mid-assault situation by fraternity and sorority students showed the importance of the role of alcohol in the experiences of sexual violence. Research on predictors of bystander behaviors in mid-assault experiences of sexual violence should consider effective strategies to intervene when the victim, perpetrator is intoxicated, and even consider when the bystanders are also consuming alcohol or other drugs.

The use of an instrument that includes items of the same behaviors for each of the TPB measures can provide an adequate assessment of proximal outcomes. In this study, we extended the TPB to capture students' experienced bystander behaviors. However, more research is needed to be more inclusive of sexual violence experiences. Current measures assume a limited pool of

behaviors. The experiences of sexual violence are often complex; thus, it is warranted to explore more extensive measures of bystander behaviors. Furthermore, bystander behaviors could be improved by also capturing how the participants intervened, when during the event, they intervened and what was the results of the intervention. These factors can impact students' attitudes towards intervening and perceived behavioral control, the two stronger predictors found in this study.

There are many challenges in the implementation of evaluations of bystander intervention programs to prevent sexual violence. There were difficulties to have a real control group without disrupting the programmed activities to prevent sexual violence during the first months in college. There are ethical considerations when deciding to implement a robust evaluation study that could impact prevention efforts. Also, there are environmental confounding factors that are difficult to detect only considering proximal factors to behavior and a short period of follow up limiting reporting of experiences of students while in college. To improve our understanding of the effectiveness of intervention efforts and the frameworks we use to evaluate them there needs to be more research on appropriate study designs and measurement tools. These limitations of this study may have impacted our ability to detect effects of the intervention, thus should be important consideration to future studies in this area.

Another vital area of research that is left to explore is the use of the TPB in the evaluation of bystander intervention programs. There is a need to understand students' experiences and beliefs while I college, and how those impact future bystander behaviors. Also, evolution studies should consider measuring the fidelity of the interventions and assess facilitator training to account for their impact on prevention outcomes. These variables were not considered in the current study and thus are a gap to fill in future research.

Final Conclusion

The development and implementation of bystander intervention programs to prevent sexual violence is a challenging feat. As a public health practitioner and researcher, I strive to understand the complexities of behaviors, simplify how to study them, and select the best strategies to impact health outcomes with high fidelity and reach positively. The findings of this study add to the body of literature on bystander intervention behaviors to prevent sexual violence on college campuses, demonstrating the TPB as a framework to study bystander behaviors and provide guidance on areas for further programming. We are a long way to fully understand who will intervene, how to intervene and when; as well the positive and negative consequences of doing so. This study contributes to the study of this model of prevention by helping focus prevention efforts on specific factors that have a higher impact on behaviors, mainly to aim prevention efforts for similar populations than the one in this study.

BIBLIOGRAPHY

Ajzen, I. (1985). From intentions to actions: A Theory of planned behavior. In P. D. J. Kuhl & D. J. Beckmann (Eds.), *Action Control* (pp. 11–39). https://doi.org/10.1007/978-3-642-69746-3_2

Ajzen, I. (1991). The theory of planned behavior. *Organizational Behavior and Human Decision Processes*, *50*(2), 179–211. https://doi.org/10.1016/0749-5978(91)90020-T

Ajzen, I. (2002a). Perceived behavioral control, self-efficacy, locus of control, and the theory of planned behavior. *Journal of Applied Social Psychology*, *32*(4), 665–683.

Ajzen, I. (2002b). Residual effects of past on later behavior: Habituation and reasoned action perspectives. *Personality and Social Psychology Review*, *6*(2), 107–122. https://doi.org/10.1207/S15327957PSPR0602_02

Ajzen, I., & Fishbein, M. (1980). *Understanding attitudes and predicting social behavior.* Englewood Cliffs, NJ, US: Prentice-Hall.

Ali, R. (2011, April 14). *[Archived] Dear Colleague: From Assistant Secretary for Civil Rights*. Retrieved from https://www2.ed.gov/about/offices/list/ocr/letters/colleague-201104.pdf

Amar, A. F., Sutherland, M., & Laughon, K. (2014). Gender differences in attitudes and beliefs associated with bystander behavior and sexual assault. *Journal of Forensic Nursing*, *10*(2), 84–91; quiz E1-2. https://doi.org/10.1097/JFN.0000000000000024

Anderson, C. (2001). Defining the severity of workplace violent events among medical and non-medical samples. A pilot study. *Gastroenterology Nursing: The Official Journal of the Society of Gastroenterology Nurses and Associates*, *24*(5), 225–230.

Anderson, L. A., & Whiston, S. C. (2005). Sexual assault education programs: A meta-analytic examination of their effectiveness. *Psychology of Women Quarterly*, *29*(4), 374–388.

Austin, M. J. M., Dardis, C. M., Wilson, M. S., Gidycz, C. A., & Berkowitz, A. D. (2016). Predictors of sexual assault-specific prosocial bystander behavior and intentions: A prospective analysis. *Violence Against Women*, *22*(1), 90–111. https://doi.org/10.1177/1077801215597790

Baker, M. R., Frazier, P. A., Greer, C., Paulsen, J. A., Howard, K., Meredith, L. N., … Shallcross, S. L. (2016). Sexual victimization history predicts academic performance in college women. *Journal of Counseling Psychology*. https://doi.org/10.1037/cou0000146

Bandura, A. (1986). *Social foundations of thought and action: A social cognitive theory*. Englewood Cliffs, NJ, US: Prentice-Hall.

Bannon, R. S., Brosi, M. W., & Foubert, J. D. (2013). Sorority women's and fraternity men's rape myth acceptance and bystander intervention attitudes. *Journal of Student Affairs Research & Practice*, *50*(1), 72–87. https://doi.org/10.1515/jsarp-2013-0005

Banyard, V. L. (2008). Measurement and correlates of prosocial bystander behavior: The case of interpersonal violence. *Violence and Victims*, *23*(1), 83–97. https://doi.org/10.1891/0886-6708.23.1.83

Banyard, V. L. (2011). Who will help prevent sexual violence: Creating an ecological model of bystander intervention. *Psychology of Violence*, *1*(3), 216–229. https://doi.org/10.1037/a0023739

Banyard, V. L. (2015). *Toward the next generation of bystander prevention of sexual and relationship violence: Action coils to engage communities*. Retrieved from https://books.google.com/books?hl=en&lr=&id=53-BCgAAQBAJ&oi=fnd&pg=PP7&dq=+%22Social+Media%22+and+%22Social+Networking%22+and+%22Sexual+violence%22+and+%22Bystander+intervention%22&ots=K5e0KJFWzN&sig=MPFNqk2ZqRtZZ-7FRe50nkQzRKY

Banyard, V. L., & Moynihan, M. M. (2011). Variation in bystander behavior related to sexual and intimate partner violence prevention: Correlates in a sample of college students. *Psychology of Violence*, *1*(4), 287–301. https://doi.org/10.1037/a0023544

Banyard, V. L., Moynihan, M. M., & Plante, E. G. (2007). Sexual violence prevention through bystander education: An experimental evaluation. *Journal of Community Psychology*, *35*(4), 463–481. https://doi.org/10.1002/jcop.20159

Banyard, V. L., Plante, E. G., & Moynihan, M. M. (2004). Bystander education: Bringing a broader community perspective to sexual violence prevention. *Journal of Community Psychology*, *32*(1), 61–79.

Banyard, V., Potter, S. J., Cares, A. C., Williams, L. M., Moynihan, M. M., & Stapleton, J. G. (2018). Multiple sexual violence prevention tools: Doses and boosters. *Journal of Aggression, Conflict and Peace Research*. https://doi.org/10.1108/JACPR-05-2017-0287

Barnett, M. D., Sligar, K. B., & Wang, C. D. C. (2016). Religious affiliation, religiosity, gender, and rape myth acceptance: Feminist theory and rape culture. *Journal of Interpersonal Violence*. https://doi.org/10.1177/0886260516665110

Basile, K. C., Smith, S. G., Breiding, M. J., Black, M. C., & Mahendra, R. R. (2014). *Sexual violence surveillance: Uniform definitions and recommended data elements, version 2.0*. Atlanta, GA: National Center for Injury Prevention and Control, Centers for Disease Control and Prevention.

Batson, C. D. (1994). The unresponsive bystander: Why doesn't he help? *Contemporary Psychology*, *39*(10), 941–943.

Brown, A. L., Banyard, V. L., & Moynihan, M. M. (2014). College students as helpful bystanders against sexual violence: Gender, race, and year in college moderate the impact of perceived peer norms. *Psychology of Women Quarterly*, *38*(3), 350–362. https://doi.org/10.1177/0361684314526855

Burn, S. (2009). A situational model of sexual assault prevention through bystander intervention. *Sex Roles*, *60*(11–12), 779–792. https://doi.org/10.1007/s11199-008-9581-5

Burt, M. R. (1980). Cultural myths and supports for rape. *Journal of Personality and Social Psychology*, *38*(2), 217–230. https://doi.org/10.1037/0022-3514.38.2.217

Buzi, R. S., Tortolero, S. R., Roberts, R. E., Ross, M. W., Markham, C. M., & Fleschler, M. (2003). Gender differences in the consequences of a coercive sexual experience among adolescents attending alternative schools. *The Journal of School Health*, *73*(5), 191–196.

Cares, A. C., Banyard, V. L., Moynihan, M. M., Williams, L. M., Potter, S. J., & Stapleton, J. G. (2015). Changing attitudes about being a bystander to violence: Translating an in-person sexual violence prevention program to a new campus. *Violence Against Women*, *21*(2), 165–187. https://doi.org/10.1177/1077801214564681

Coker, A. L., Bush, H. M., Fisher, B. S., Swan, S. C., Williams, C. M., Clear, E. R., & DeGue, S. (2015). Multi-college bystander intervention evaluation for violence prevention. *American Journal of Preventive Medicine*. https://doi.org/10.1016/j.amepre.2015.08.034

DeGue, S. (2014). *Preventing Sexual violence on college campuses: Lessons from research and practice* _. retrieved from http://www.councilofpresidents.org/docs/CampusSA/meeting3_10_14_15/PreventingSVonCollegeCampuses.pdf

DeGue, S., Valle, L. A., Holt, M. K., Massetti, G. M., Matjasko, J. L., & Tharp, A. T. (2014). A systematic review of primary prevention strategies for sexual violence perpetration. *Aggression and Violent Behavior*, *19*(4), 346–362. https://doi.org/10.1016/j.avb.2014.05.004

Fishbein, M., & Ajzen, I. (1975). *Belief, attitude, intention, and behavior: An introduction to theory and research*. Reading, Mass.: Addison-Wesley PubCo.

Fisher, B. S., Cullen, F. T., & Turner, M. G. (2000). *The sexual victimization of college women.* Retrieved from http://eric.ed.gov/?id=ED449712

Flack, W. F., Caron, M. L., Leinen, S. J., Breitenbach, K. G., Barber, A. M., Brown, E. N., … Stein, H. C. (2008). "The red zone": Temporal risk for unwanted sex among college students. *Journal of Interpersonal Violence*, *23*(9), 1177–1196. https://doi.org/10.1177/0886260508314308

Flay, B. R., Snyder, F., & Petraitis, J. (2009). The theory of triadic influence. *Emerging Theories in Health Promotion Practice and Research*, *2*, 451–510.

Foubert, J. D. (2013). Integrating religiosity and pornography use into the prediction of bystander efficacy and willingness to prevent sexual assault. *Journal of Psychology & Theology*, *41*(3), 242–251.

Garcia-Moreno, C., Jansen, H. A., Ellsberg, M., Heise, L., Watts, C. H., & others. (2006). Prevalence of intimate partner violence: Findings from the WHO multi-country study on women's health and domestic violence. *The Lancet*, *368*(9543), 1260–1269.

Hahn, C. K., Morris, J. M., & Jacobs, G. A. (2016). Predictors of bystander behaviors and sexual assertiveness among college women attending a sexual assault prevention program: Bystander behaviors and sexual assertiveness. *Journal of Community Psychology*. https://doi.org/10.1002/jcop.21877

Hayes, R. M., Abbott, R. L., & Cook, S. (2016). It's her fault: Student acceptance of rape myths on two college campuses. *Violence Against Women*, *22*(13), 1540–1555. https://doi.org/10.1177/1077801216630147

Hoxmeier, J. C. (2015). *Students as pro-social bystanders: Opportunities, past behaviors, and intentions to intervene in sexual assault risk situations*. Retrieved from http://ir.library.oregonstate.edu/xmlui/handle/1957/55789

Hoxmeier, J. C., Acock, A. C., & Flay, B. R. (2017). Students as prosocial bystanders to sexual assault: Demographic correlates of intervention norms, intentions, and missed opportunities. *Journal of Interpersonal Violence*, 0886260517689888. https://doi.org/10.1177/0886260517689888

Hoxmeier, J. C., Flay, B. R., & Acock, A. C. (2016). Control, norms, and attitudes: Differences Between students who do and do not intervene as bystanders to sexual assault. *Journal of Interpersonal Violence*. https://doi.org/10.1177/0886260515625503

Jewkes, R. (2002). Intimate partner violence: Causes and prevention. *The Lancet*, *359*(9315), 1423–1429.

Jordan, J. B. (2011). *Examining the effects of two sexual assault/date rape interventions in a population of college freshmen.* ProQuest Information & Learning.

Jouriles, E. N., Kleinsasser, A., Rosenfield, D., & McDonald, R. (2016). Measuring bystander behavior to prevent sexual violence: Moving beyond self-reports. *Psychology of Violence*, *6*(1), 73–81. https://doi.org/10.1037/a0038230

Jouriles, E. N., Krauss, A., Vu, N. L., Banyard, V. L., & McDonald, R. (2018). Bystander programs addressing sexual violence on college campuses: A systematic review and meta-analysis of program outcomes and delivery methods. *Journal of American College Health*, *66*(6), 457–466. https://doi.org/10.1080/07448481.2018.1431906

Katz, J., & Moore, J. (2013). Bystander education training for campus sexual assault prevention: An initial meta-analysis. *Violence and Victims*, *28*(6), 1054–1067.

Kleinsasser, A., Jouriles, E. N., McDonald, R., & Rosenfield, D. (2015). An online bystander intervention program for the prevention of sexual violence. *Psychology of Violence*, *5*(3), 227–235. https://doi.org/10.1037/a0037393

Krebs, C. P., Lindquist, C. H., Berzofsky, M., Shook-Sa, B., & Peterson, K. (2016). *Campus climate survey validation study final technical report*. Retrieved from Bureau of Justice Statistics website: https://www.bjs.gov/content/pub/pdf/ccsvsftr.pdf

Labhardt, D., Holdsworth, E., Brown, S., & Howat, D. (2017). You see but you do not observe: A review of bystander intervention and sexual assault on university campuses. *Aggression and Violent Behavior*, *35*, 13–25. https://doi.org/10.1016/j.avb.2017.05.005

Langhinrichsen-Rohling, J., Foubert, J. D., Brasfield, H. M., Hill, B., & Shelley-Tremblay, S. (2011). The Men's Program: Does it impact college men's self-reported bystander efficacy and willingness to intervene? *Violence Against Women*, *17*(6), 743–759. https://doi.org/10.1177/1077801211409728

Latané, B., & Darley, J. M. (1970). *The unresponsive bystander: Why doesn't he help?* New York: Appleton-Century Crofts.

Lhamon, C. (2014, April 29). *[Archived] Questions and answers on Title IX sexual violence*. Retrieved from https://www2.ed.gov/about/offices/list/ocr/docs/qa-201404-title-ix.pdf

Littleton, H., Grills-Taquechel, A., & Axsom, D. (2009). Impaired and incapacitated rape victims: Assault characteristics and post-assault experiences. *Violence and Victims*, *24*(4), 439–457. https://doi.org/10.1891/0886-6708.24.4.439

Lonsway, K. A., & Fitzgerald, L. F. (1994). Rape myths in review. *Psychology of Women Quarterly*, *18*(2), 133–164.

Mcfarlane, J., Malecha, A., Watson, K., Gist, J., Batten, E., Hall, I., & Smith, S. (2005). Intimate partner sexual assault against women: Frequency, health consequences, and treatment outcomes. *Obstetrics & Gynecology*, *105*(1), 99–108. https://doi.org/10.1097/01.AOG.0000146641.98665.b6

McMahon, S. (2010). Rape myth beliefs and bystander attitudes among incoming college students. *Journal of American College Health*, *59*(1), 3–11. https://doi.org/10.1080/07448481.2010.483715

McMahon, S. (2015). Call for research on bystander intervention to prevent sexual violence: The role of campus environments. *American Journal of Community Psychology*, *55*(3–4), 472–489. https://doi.org/10.1007/s10464-015-9724-0

McMahon, S., Allen, C. T., Postmus, J. L., McMahon, S. M., Peterson, N. A., & Lowe Hoffman, M. (2014). Measuring bystander attitudes and behavior to prevent sexual violence. *Journal of American College Health*, *62*(1), 58–66. https://doi.org/10.1080/07448481.2013.849258

McMahon, S., & Banyard, V. L. (2012). When can I help? A conceptual framework for the prevention of sexual violence through bystander intervention. *Trauma, Violence & Abuse*, *13*(1), 3–14. https://doi.org/10.1177/1524838011426015

McMahon, S., & Farmer, G. L. (2011). An updated measure for assessing subtle rape myths. *Social Work Research*, *35*(2), 71–81. https://doi.org/10.1093/swr/35.2.71

McMahon, S., Peterson, N. A., Winter, S. C., Palmer, J. E., Postmus, J. L., & Koenick, R. A. (2015). Predicting bystander behavior to prevent sexual assault on college campuses: The role of self-efficacy and intent. *American Journal of Community Psychology*, *56*(1–2), 46–56. https://doi.org/10.1007/s10464-015-9740-0

McMahon, S., Winter, S. C., Palmer, J. E., Postmus, J. L., Peterson, N. A., Zucker, S., & Koenick, R. (2015). A randomized controlled trial of a multi-dose bystander intervention program using peer education theater. *Health Education Research*, *30*(4), 554–568. https://doi.org/10.1093/her/cyv022

Muehlenhard, C. L., Peterson, Z. D., Humphreys, T. P., & Jozkowski, K. N. (2017). Evaluating the one-in-five statistic: Women's risk of sexual assault while in college. *The Journal of Sex Research*, *54*(4–5), 549–576. https://doi.org/10.1080/00224499.2017.1295014

Oregon State University. (2017). *2017 Annual security and fire safety report*.

Paulhus, D. L. (1984). Two-component models of socially desirable responding. *Journal of Personality and Social Psychology*, *46*(3), 598.

Payne, D. L., Lonsway, K. A., & Fitzgerald, L. F. (1999). Rape myth acceptance: Exploration of its structure and its measurement using the Illinois Rape Myth Acceptance Scale. *ResearchGate*. Retrieved from https://www.researchgate.net/publication/230801415_Rape_Myth_Acceptance_Exploration_of_Its_Structure_and_Its_Measurement_Using_the_Illinois_Rape_Myth_Acceptance_Scale

Q&A on Campus Sexual Misconduct. (2017, September). Retrieved from https://www2.ed.gov/about/offices/list/ocr/docs/qa-title-ix-201709.pdf

Rhodes, R. E., Blanchard, C. M., & Matheson, D. H. (2006). A multicomponent model of the theory of planned behaviour. *British Journal of Health Psychology*, *11*(1), 119–137.

Shaw, J., & Janulis, P. (2016). Re-evaluating sexual violence prevention through bystander education. *Journal of Interpersonal Violence*, *31*(16), 2729–2750. https://doi.org/10.1177/0886260515580365

Smith, S. G., Chen, J., Basile, K. C., Gilbert, L. K., Merrick, M., Patel, N., … Jain, A. (2017). *The National Intimate Partner and Sexual Violence Survey (NISVS): 2010-2012 state report*. Atlanta, GA: National Center for Injury Prevention and Control, Centers for Disease Control and Prevention.

Steinmetz, H., Knappstein, M., Ajzen, I., Schmidt, P., & Kabst, R. (2016). How effective are behavior change interventions based on the theory of planned behavior? *Zeitschrift Für Psychologie*. Retrieved from http://econtent.hogrefe.com/doi/full/10.1027/2151-2604/a000255

Trafimow, D., Sheeran, P., Conner, M., & Finlay, K. A. (2002). Evidence that perceived behavioural control is a multidimensional construct: Perceived control and perceived difficulty. *British Journal of Social Psychology*, *41*(1), 101–121.

Ullman, U., & Ullman, S. (201206). Problem drinking and drug abuse in women sexual assault survivors: Role of trauma history, coping, and PTSD. *Alcoholism-Clinical and Experimental Research*, *36*, 215A-215A.

U.S. Department of Education, Office of Postsecondary Education. (2016). *The handbook for campus safety and security reporting, 2016 edition*. Retrieved from https://www2.ed.gov/admins/lead/safety/handbook.pdf

World Health Organization (WHO). (2013). *Global and regional estimates of violence against women: Prevalence and health effects of intimate partner violence and non-partner sexual violence*. Retrieved from https://books.google.com/books?hl=en&lr=&id=ZLMXDAAAQBAJ&oi=fnd&pg=PP1&dq=sexual+violence+world+statistics&ots=eYhbKb_efx&sig=2Tomzkj9eUvEJs23CLMzIIcFf9U

Yeater, E. A., Treat, T. A., Viken, R . J., & McFall, R. M. (2010). Cognitive processes underlying women's risk judgments: Associations with sexual victimization history and rape myth acceptance. *Journal of Consulting and Clinical Psychology*, *78*(3), 375–386. https://doi.org/10.1037/a0019297

APPENDICES

Appendix A: Multi-group comparisons path models

Intervention Group

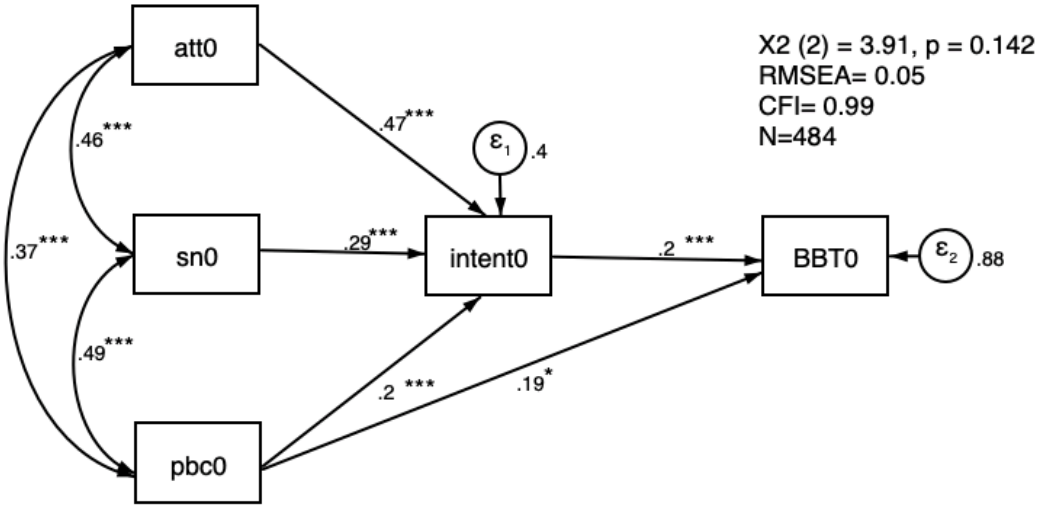

Note. N=484. att0=attitudes, sn0=subjective norms, pbc0=perceived behavioral control, intent0=intention to intervene, BBT0= bystander behaviors score, al at pretest. *p<0.05, **p<0.001, and ***p<0.001

Comparison Group

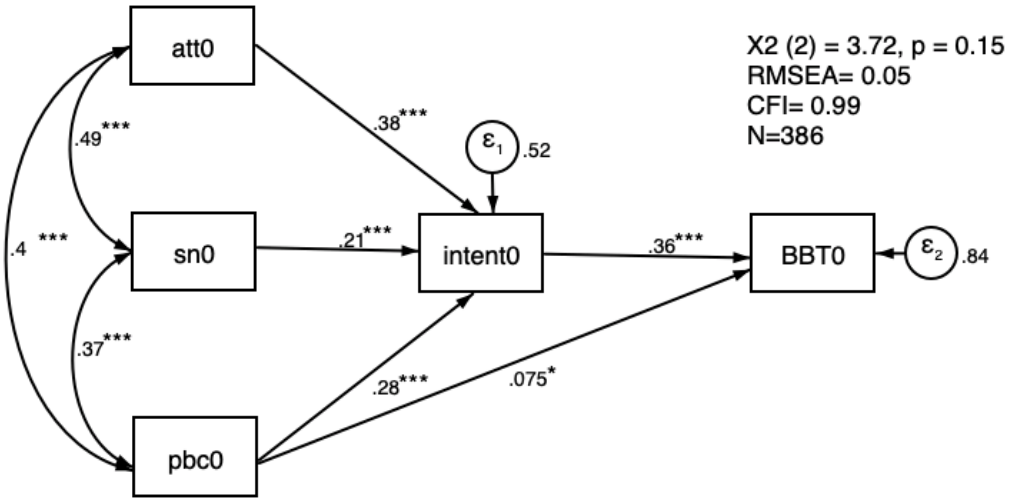

Note. N=386. att0=attitudes, sn0=subjective norms, pbc0=perceived behavioral control, intent0=intention to intervene, BBT0= bystander behaviors score, al at pretest. *p<0.05, **p<0.001, and ***p<0.001

Figure A1. Multi-group comparison model by intervention group.

Table A1

Invariance parameters statistics between models for each intervention groups.

Path	Chi2	Df	p
Att->intent	0.298	1	0.59
Sn-> intent	4.55	1	0.32
Pbc-> intent	0.88	1	0.35
Intent->BB	2.38	1	0.12
PBC->BB	1.19	1	0.28

Note. N=302. *p<0.05, **p<0.01 and p<0.001. SN=Subjective norms, PBC=Perceived Behavioral Control; Intent=Intentions to intervene, BB=Bystander Behaviors.

Table A2

Standardized Path Coefficients from Unconstrained Multiple-Group Path Model by Intervention Group.

	Direct effect		Indirect effect		Total effect	
	Intervention	Comparison	Intervention	Comparison	Intervention	Comparison
Intention to intervene						
Att -> Intent	0.47***	0.38***	-	-	0.47***	0.38***
SN -> Intent	0.29***	0.21***	-	-	0.29***	0.21***
PBC -> Intent	0.20***	0.28***	-	-	0.20***	0.28***
Bystander Behaviors						
Intent->BB	0.20**	0.36***	-	-	0.20***	0.36***
Att -> BB	-		0.096**	0.14***	0.096**	0.14***
SN -> BB	-		0.060**	0.77**	0.060*	0.077*
PBC-> BB	0.19**	0.07	0.042*	0.10***	0.23***	0.18*

Note. N=302. *p<0.05, **p<0.01 and p<0.001. SN=Subjective norms, PBC=Perceived Behavioral Control; Intent=Intentions to intervene, BB=Bystander Behaviors.

Appendix B: Questionnaire

Table B1

Modified version of the SABBQ: Study Questionnaire.

Q#	Variable Name	Item(s)	Responses	Type of variable	Reference
Demographic characteristics					
[Instructions] Please answer the following questions by selecting the best answer.					
1	Fraternity/Sorority membership	Are you a member of a sorority/fraternity?	1=Yes 2=No	Dichotomous	SABB-Q
2	BGAD participation	Have you ever participated in "Beavers Give a Dam" (BGAD), OSU's in-person bystander training program?	1=Yes 2=No [If YES, survey stops, redirected to alternative survey]	Dichotomous	
3	Information on SV	Have you received information in the past on sexual violence prevention?	1=Yes 2=No	Dichotomous	Modified SABB-Q
3A		Has someone talked to you about the BGAD prevention program at OSU?	1=Yes, a friend 2=Yes, someone who works for the university 3=No	Categorical	
3B		Has someone talked to you about preventing sexual violence?	1=Yes, a friend 2=Yes, someone who works for the university 3=No	Categorical	

Q#	Variable Name	Item(s)	Responses	Type of variable	Reference
4	Participation in SV prevention programs	Have you participated in sexual violence prevention trainings, workshops, or lectures in the past?	1=Yes 2=No	Dichotomous	Modified SABB-Q
5	SV information online	How often do you see information about sexual violence prevention online?	1=Never 2=Once a year 3=Monthly 4=Weekly 5=Daily	Categorical/ordinal	
6	Party attendance	How often do you attend parties where alcohol is present?	1=Never 2=1-5 times a month 3=6-10 times a month 4=More than 10 times a month	Categorical/ordinal	SABB-Q
7	Age	What is your age?	1=less than 18y 2=18yr-19y; 3=20y-21y; 6=22-23; 7=24+ [If less than 18, survey stops, redirected to alternative survey]	Categorical/ordinal	
8	Gender	What is your gender?	1=woman; 2=man; 3=non-binary; 4=trans man; 5=trans female; 6=other	Categorical/nominal	
9	Race/ethnicity	What is your race/ethnicity?	1=White non-Hispanic 2=Black or African American 3=Hispanic 4=Asian/Pacific Islander	Categorical/nominal	

Q#	Variable Name	Item(s)	Responses	Type of variable	Reference
			5=American Indian/Alaska Native 6=Other		
10	Year in School	What is your year in school?	1=First year; 2=Second year; 3=Third year; 4=Fourth year; 5=5+ year; 6=graduate student; 7=professional degree; 8=other	Categorical/nominal	
11	Level of education of father	What is the education level of your father?	1=Less than High School 2=High School 3=Some College 4=Bachelor's Degree 5=Advanced Degree	Categorical/nominal	SABB-Q
12	Level of education of mother	What is the education level of your mother?	1=Less than High School 2=High School 3=Some College 4=Bachelor's Degree 5=Advanced Degree	Categorical/nominal	SABB-Q
13	International	Are you considered an International student at OSU?	1=Yes 2=No	Dichotomous	
14	Friend Victim	Do you have a friend who has been the victim of sexual violence?	1=Yes 2=No	Dichotomous	SABB-Q Modified
15	Friend Perpetrator	Do you have a friend who has been the perpetrator of sexual violence?	1=Yes 2=No	Dichotomous	SABB-Q Modified
Bystander Attitudes towards intervening					

Q#	Variable Name	Item(s)	Responses	Type of variable	Reference
[Instructions] In the next four sections, you will be asked different questions (written in bold) about the same 13 scenarios. Some may look very similar, but they are asking about different people, someone in general or your friend. Answer choices are also different. Depending on who the person is or if the person is intoxicated or not, you may give a different answer. Try to evaluate what you honestly think before answering. We are not looking for right or wrong answers. Please select the number that corresponds to the answer that is true for you.					
To prevent a sexual assault, how unhelpful or helpful do you think it is to take each of these actions?					
17	Intervention Action (IA1BA)	Confront your friend who says they plan to drug or get someone drunk to have sex.	1=1 Totally Unhelpful 2=2 3=3 4=4 5=5 6=6 7=7 Totally Helpful		SABB-Q Modified
18	IA2BA	Help your friend who is passed out and being approached or touched by someone or a group of people.			SABB-Q Modified
19	IA3BA	Check in with your friend who looks intoxicated and is being taken away from the group by someone who may have negative intentions.			SABB-Q Modified
20	IA4BA	Say something to your friend who may have negative intentions and is taking someone who looks intoxicated away from the group.			SABB-Q Modified
To reduce the harm of sexual assault, how unhelpful or helpful do you think it is to take each of these actions?					
21	IA5BA	Interrupt the situation when you walk in on your friend who appears to be forcing someone to have sex.	1=1 Totally Unhelpful 2=2 3=3 4=4 5=5 6=6 7=7 Totally Helpful		SABB-Q Modified
22	IA6BA	Interrupt the situation when you walk in on someone who appears to be forcing your friend to have sex.			SABB-Q Modified
23	IA7BA	Interrupt the situation when you walk in on your friend who is having sex with an intoxicated person.			SABB-Q Modified
24	IA8BA	Interrupt the situation when you walk in on someone who is having sex with a friend who is intoxicated.			SABB-Q Modified

Q#	Variable Name	Item(s)	Responses	Type of variable	Reference
25	IA9BA	Express concern or offer help if your friend said they had an unwanted sexual experience even if they don't call it rape.			SABB-Q Modified
26	IA10BA	Criticize your friend who says they had sex with someone who was passed out or didn't consent to have sex.			SABB-Q Modified
27	IA11BA	Go with your friend to get help or talk with someone (e.g. police, counselor, crisis center, resident advisor) about an unwanted sexual experience.			SABB-Q Modified
28	IA12BA	Visit a website to learn more about sexual violence.			BAS-R
29	IA13BA	Participate in a workshop to learn more about how to prevent sexual violence.			
Bystander confidence (intention) to intervene					
If you were to encounter these situations, how likely are you to take each of these actions?					
30	Intervention Action (IA1BI)	Confront your friend who says they plan to drug or get someone drunk to have sex.			SABB-Q Modified
31	IA2BI	Help your friend who is passed out and being approached or touched by someone or a group of people.			SABB-Q Modified
32	IA3BI	Check in with your friend who looks intoxicated and is being taken away from the group by someone who may have negative intentions.			SABB-Q Modified
33	IA4BI	Say something to your friend who may have negative intentions and is taking someone who looks intoxicated away from the group.			SABB-Q Modified

Q#	Variable Name	Item(s)	Responses	Type of variable	Reference
34	IA5BI	Interrupt the situation when you walk in on your friend who appears to be forcing someone to have sex.	1=1 Totally Unlikely 2=2 3=3 4=4 5=5 6=6 7=7 Totally Likely		SABB-Q Modified
35	IA6BI	Interrupt the situation when you walk in on someone who appears to be forcing your friend to have sex.			SABB-Q Modified
36	IA7BI	Interrupt the situation when you walk in on your friend who is having sex with an intoxicated person.			SABB-Q Modified
37	IA8BI	Interrupt the situation when you walk in on someone who is having sex with a friend who is intoxicated.			SABB-Q Modified
38	IA9BI	Express concern or offer help if your friend said they had an unwanted sexual experience even if they don't call it rape.			SABB-Q Modified
39	IA10BI	Criticize your friend who says they had sex with someone who was passed out or didn't consent to have sex.			SABB-Q Modified
40	IA11BI	Go with your friend to get help or talk with someone (e.g. police, counselor, crisis center, resident advisor) about an unwanted sexual experience.			SABB-Q Modified
41	IA12BI	Visit a website to learn more about sexual violence.			BAS-R
42	IA13BI	Participate in a workshop to learn more about how to prevent sexual violence.			
Bystander subjective norms about intervening					
[Instructions] Remember that some items may look very similar, but they are asking about different people, someone in general or your friend. Answer choices are also different and depending on who the person is or if the person is intoxicated or not, you may give a different answer. Try to evaluate what you honestly think before answering. We are not looking for right or wrong answers. Please select the number that corresponds to the answer that is true for you.					

Q#	Variable Name	Item(s)	Responses	Type of variable	Reference
How much do you think your good friends would disapprove or approve of you if you were to take each of the following actions?					
43	Intervention Action (IA1BN)	Confront your friend who says they plan to drug or get someone drunk to have sex.	1=1 Totally Disapprove 2=2 3=3 4=4 5=5 6=6 7=7 Totally Approve		SABB-Q Modified
44	IA2BN	Help your friend who is passed out and being approached or touched by someone or a group of people.			SABB-Q Modified
45	IA3BN	Check in with your friend who looks intoxicated and is being taken away from the group by someone who may have negative intentions.			SABB-Q Modified
46	IA4BN	Say something to your friend who may have negative intentions and is taking someone who looks intoxicated away from the group.			SABB-Q Modified
47	IA5BN	Interrupt the situation when you walk in on your friend who appears to be forcing someone to have sex.			SABB-Q Modified
48	IA6BN	Interrupt the situation when you walk in on someone who appears to be forcing your friend to have sex.			SABB-Q Modified
49	IA7BN	Interrupt the situation when you walk in on your friend who is having sex with an intoxicated person.			SABB-Q Modified
50	IA8BN	Interrupt the situation when you walk in on someone who is having sex with a friend who is intoxicated.			SABB-Q Modified
51	IA9BN	Express concern or offer help if your friend said they had an unwanted sexual experience even if they don’t call it rape.			SABB-Q Modified

Q#	Variable Name	Item(s)	Responses	Type of variable	Reference
52	IA10BN	Criticize your friend who says they had sex with someone who was passed out or didn't consent to have sex.			SABB-Q Modified
53	IA11BN	Go with your friend to get help or talk with someone (e.g. police, counselor, crisis center, resident advisor) about an unwanted sexual experience.			SABB-Q Modified
54	IA12BN	Visit a website to learn more about sexual violence.			BAS-R
55	IA13BN	Participate in a workshop to learn more about how to prevent sexual violence.			
Bystander perceived behavioral control to intervene					
If you were to encounter this situation, how difficult or easy would it be for you to take each of these actions?					
56	Intervention Action (IA1BE)	Confront your friend who says they plan to drug or get someone drunk to have sex.	1=1 Very Difficult 2=2 3=3 4=4 5=5 6=6 7=7 Very Easy		SABB-Q Modified
57	IA2BE	Help your friend who is passed out and being approached or touched by someone or a group of people.			SABB-Q Modified
58	IA3BE	Check in with your friend who looks intoxicated and is being taken away from the group by someone who may have negative intentions.			SABB-Q Modified
59	IA4BE	Say something to your friend who may have negative intentions and is taking someone who looks intoxicated away from the group.			SABB-Q Modified
60	IA5BE	Interrupt the situation when you walk in on your friend who appears to be forcing someone to have sex.			SABB-Q Modified

Q#	Variable Name	Item(s)	Responses	Type of variable	Reference
61	IA6BE	Interrupt the situation when you walk in on someone who appears to be forcing your friend to have sex.			SABB-Q Modified
62	IA7BE	Interrupt the situation when you walk in on your friend who is having sex with an intoxicated person.			SABB-Q Modified
63	IA8BE	Interrupt the situation when you walk in on someone who is having sex with a friend who is intoxicated.			SABB-Q Modified
64	IA9BE	Express concern or offer help if your friend said they had an unwanted sexual experience even if they don't call it rape.			SABB-Q Modified
65	IA10BE	Criticize your friend who says they had sex with someone who was passed out or didn't consent to have sex.			SABB-Q Modified
66	IA11BE	Go with your friend to get help or talk with someone (e.g. police, counselor, crisis center, resident advisor) about an unwanted sexual experience.			SABB-Q Modified
67	IA12BE	Visit a website to learn more about sexual violence.			BAS-R
68	IA13BE	Participate in a workshop to learn more about how to prevent sexual violence.			
Bystander behaviors and Bystander opportunities to intervene					
[Instructions] This section asks two questions about 12 situations you may have encountered and had the opportunity to intervene. We would like to know if you have been faced with this situation and if you took action or not.					

Q#	Variable Name	Item(s)	Responses	Type of variable	Reference
69	IA1BB	Have you heard a friend say they plan to drug or get someone drunk to have sex?	1=Yes [If Yes, continue to question 69.1] 2=No [If No, continue to next item]	Dichotomous	Modified SABB-Q
69.1	IA1BBa	What did you do?	1=Did nothing, it wasn't my business 2=Did nothing because I wasn't sure what to do 3=Did something, confronted the situation directly 4=Did something, went and got assistance from someone else 5=Other (please specify)	Categorical/open-ended (5)	Adapted from ISpeakand SABB-Q
70	IA2BB	Have you seen a friend who is passed out and being approached or touched by someone or a group of people?	1=Yes [If Yes, continue to question 70.1] 2=No [If No, continue to next item]	Dichotomous	Modified SABB-Q
70.1	IA2BBa	What did you do?	1=Did nothing, it wasn't my business	Categorical/open-ended (5)	Adapted from ISpeakand SABB-Q

Q#	Variable Name	Item(s)	Responses	Type of variable	Reference
			2=Did nothing because I wasn't sure what to do 3=Did something, confronted the situation directly 4=Did something, went and got assistance from someone else 5=Other (please specify)		
71	IA3BB	Have you seen a friend who looks intoxicated being taken away from the group by someone who may have negative intentions.?	1=Yes [If Yes, continue to question 71.1] 2=No [If No, continue to next item]	Dichotomous	Modified SABB-Q
71.1	IA3BBa	What did you do?	1=Did nothing, it wasn't my business 2=Did nothing because I wasn't sure what to do 3=Did something, confronted the situation directly 4=Did something, went and got assistance from someone else	Categorical/open-ended (5)	Adapted from ISpeakand SABB-Q

Q#	Variable Name	Item(s)	Responses	Type of variable	Reference
			5=Other (please specify)		
72	IA4BB	Have you seen a friend, who may have negative intentions, take someone who looks intoxicated away from the group?	1=Yes [If Yes, continue to question 72.1] 2=No [If No, continue to next item]	Dichotomous	Modified SABB-Q
72.1	IA4BBa	What did you do?	1=Did nothing, it wasn't my business 2=Did nothing because I wasn't sure what to do 3=Did something, confronted the situation directly 4=Did something, went and got assistance from someone else 5=Other (please specify)	Categorical/open-ended (5)	Adapted from ISpeakand SABB-Q
73	IA5BB	Have you walked in on your friend who appears to be forcing someone to have sex?	1=Yes [If Yes, continue to question 73.1] 2=No [If No, continue to next item]	Dichotomous	Modified SABB-Q
73.1	IA5BBa	What did you do?	1=Did nothing, it wasn't my business	Categorical/open-ended (5)	Adapted from

Q#	Variable Name	Item(s)	Responses	Type of variable	Reference
			2=Did nothing because I wasn't sure what to do 3=Did something, confronted the situation directly 4=Did something, went and got assistance from someone else 5=Other (please specify)		ISpeakand SABB-Q
74	IA6BB	Have you walked in on someone who appears to be forcing your friend to have sex?	1=Yes [If Yes, continue to question 74.1] 2=No [If No, continue to next item]	Dichotomous	Modified SABB-Q
74.1	IA6BBa	What did you do?	1=Did nothing, it wasn't my business 2=Did nothing because I wasn't sure what to do 3=Did something, confronted the situation directly 4=Did something, went and got assistance from someone else	Categorical/open-ended (5)	Adapted from ISpeakand SABB-Q

Q#	Variable Name	Item(s)	Responses	Type of variable	Reference
			5=Other (please specify)		
75	IA7BB	Have you walked in on your friend who is having sex with an intoxicated person?	1=Yes [If Yes, continue to question 75.1] 2=No [If No, continue to next item]	Dichotomous	Modified SABB-Q
75.1	IA7BBa	What did you do?	1=Did nothing, it wasn't my business 2=Did nothing because I wasn't sure what to do 3=Did something, confronted the situation directly 4=Did something, went and got assistance from someone else 5=Other (please specify)	Categorical/open-ended (5)	Adapted from ISpeakand SABB-Q
76	IA8BB	Have you walked in on someone who is having sex with a friend who is intoxicated?	1=Yes [If Yes, continue to question 76.1] 2=No [If No, continue to next item]	Dichotomous	Modified SABB-Q
76.1	IA8BBa	What did you do?	1=Did nothing, it wasn't my business	Categorical/open-ended (5)	Adapted from

Q#	Variable Name	Item(s)	Responses	Type of variable	Reference
			2=Did nothing because I wasn't sure what to do 3=Did something, confronted the situation directly 4=Did something, went and got assistance from someone else 5=Other (please specify)		ISpeakand SABB-Q
77	IA9BB	Have you heard a friend say they had an unwanted sexual experience even if they don't call it rape?	1=Yes [If Yes, continue to question 77.1] 2=No [If No, continue to next item]	Dichotomous	Modified SABB-Q
77.1	IA9BBa	What did you do?	1=Did nothing, it wasn't my business 2=Did nothing because I wasn't sure what to do 3=Did something, confronted the situation directly 4=Did something, went and got assistance from someone else	Categorical/open-ended (5)	Adapted from ISpeakand SABB-Q

Q#	Variable Name	Item(s)	Responses	Type of variable	Reference
			5=Other (please specify)		
78	IA10BB	Have you heard your friend saying they had sex with someone who was passed out or didn't consent to have sex?	1=Yes [If Yes, continue to question 78.1] 2=No [If No, continue to next item]	Dichotomous	Modified SABB-Q
78.1	IA10BBa	What did you do?	1=Did nothing, it wasn't my business 2=Did nothing because I wasn't sure what to do 3=Did something, confronted the situation directly 4=Did something, went and got assistance from someone else 5=Other (please specify)	Categorical/open-ended (5)	Adapted from ISpeakand SABB-Q
79	IA11BB	Have you known of a friend who needed help or talk with someone (e.g. police, counselor, crisis center, resident advisor) about an unwanted sexual experience?	1=Yes [If Yes, continue to question 79.1] 2=No [If No, continue to next item]	Dichotomous	Modified SABB-Q
79.1	IA11BBa	What did you do?	1=Did nothing, it wasn't my business	Categorical/open-ended (5)	Adapted from

Q#	Variable Name	Item(s)	Responses	Type of variable	Reference
			2=Did nothing because I wasn't sure what to do 3=Did something, confronted the situation directly 4=Did something, went and got assistance from someone else 5=Other (please specify)		ISpeakand SABB-Q
Acceptance of Rape Myths					
[Instructions] Please select the best response that feels true to you.					
How much do you agree or disagree with the following statements?					
81	RMA1	If a girl is raped while she is drunk, she is at least somewhat responsible for letting things get out of hand.	1=1 Strongly Agree 2=2 3=3 4=4 5=5 Strongly Disagree		IRMA-SF
82	RMA2	When girls go to parties wearing slutty clothes, they are asking for trouble			IRMA-SF
83	RMA3	If a girl goes to a room alone with a guy at a party, it is her own fault if she is raped.			IRMA-SF
84	RMA4	If a girl acts like a slut, eventually she is going to get into trouble.			IRMA-SF
85	RMA5	When girls get raped, it's often because the way they said "no" was unclear.			IRMA-SF
86	RMA6	If a girl initiates kissing or hooking up, she should not be surprised if a guy assumes she wants to have sex.			IRMA-SF
87	RMA7	When guys rape, it is usually because of their strong desire for sex.			IRMA-SF

Q#	Variable Name	Item(s)	Responses	Type of variable	Reference
88	RMA8	Guys don't usually intend to force sex on a girl, but sometimes they get too sexually carried away			IRMA-SF
89	RMA9	Rape happens when a guy's sex drive goes out of control.			IRMA-SF
90	RMA10	If a guy is drunk, he might rape someone unintentionally.			IRMA-SF
91	RMA11	It shouldn't be considered rape if a guy is drunk and didn't realize what he was doing			IRMA-SF
92	RMA12	If both people are drunk, it can't be rape.			IRMA-SF
93	RMA13	If a girl doesn't physically resist sex—even if protesting verbally—it can't be considered rape			IRMA-SF
94	RMA14	If a girl doesn't physically fight back, you can't really say it was rape.			IRMA-SF
95	RMA15	A rape probably doesn't happen if a girl doesn't have any bruises or marks.			IRMA-SF
96	RMA16	If the accused "rapist" doesn't have a weapon, you really can't call it rape.			IRMA-SF
97	RMA17	If a girl doesn't say "no" she can't claim rape.			IRMA-SF
98	RMA18	A lot of times, girls who say they were raped agreed to have sex and then regret it.			IRMA-SF
99	RMA19	Rape accusations are often used as a way of getting back at guys.			IRMA-SF
100	RMA20	A lot of times, girls who say they were raped often led the guy on and then had regrets.			IRMA-SF
101	RMA21	A lot of times, girls who claim they were raped have emotional problems.			IRMA-SF

Q#	Variable Name	Item(s)	Responses	Type of variable	Reference
102	RMA22	Girls who are caught cheating on their boyfriends sometimes claim it was rape.			IRMA-SF
Social Desirability Scale-Impression Management					
Please answer if you					
118	SD1	Do you tell the truth?	1=Yes 2=No	Dichotomous	BIDR-IM
119	SD2	When you take sick-leave from work or school, are you as sick as you say you are?		Dichotomous	BIDR-IM
120	SD3	I am always courteous, even to people who are disagreeable?		Dichotomous	BIDR-IM
121	SD4	Once in a while I laugh at a dirty joke.		Dichotomous	BIDR-IM
122	SD5	I sometimes try to get even, rather than forgive and forget.		Dichotomous	BIDR-IM
123	SD6	I always apologize to others for my mistakes.		Dichotomous	BIDR-IM
124	SD7	Would you declare everything at customs, even if you knew that you could never be found out?		Dichotomous	BIDR-IM
125	SD8	I never attend a sexy show if I can avoid it.		Dichotomous	BIDR-IM
126	SD9	Sometimes at elections I vote for candidates I know little about.		Dichotomous	BIDR-IM
127	SD10	I am sometimes irritated by people who ask favors of me.		Dichotomous	BIDR-IM

Appendix C: Reliability of Scales

Reliability of Proximal Outcome Scales

A principal component factor analysis (PCFA) was done for each of the four subscales of the TPB, intentions, perceived behavioral control, subjective norms, and attitudes for the 11 intervention behaviors. Analysis for all measures was done with both pre intervention and 3-month follow up data.

Bystander Intention to Intervene

The intention to intervene subscale initially had an adequate reliability of 0.89, for a two-factor solution. Analysis showed that factor loading for the second factor were low (<0.30) and that dropping one item would increase reliability by 0.021. This item was dropped from analysis. Although, only two factors came up in the analysis the factor loading pattern matrix showed that items 5 to 8 and 9 to 11, may be tapping on different dimensions of the latent construct of intention to intervene. This is consistent with the make-up of this scale since items 1 to 4 are related to pre assault behaviors, 5 to 8 to during assault behaviors, and 9 to 11 to post assault behaviors. Thus, in the next steps I parceled these three groups of items and ran a PCFA for each. The three parcels provided high reliability estimates with intentions pre assault with 0.88, during assault 0.87, and after assault 0.76. The total score was calculated from the mean score of the three underlying factors. The reliability of the full bystander intention to intervene scale for the three parcels was 0.83. Analysis showed consistency with high factor loadings from 0.86 to 0.90.

The same approach was done with 3-month follow-up data for bystander intention to intervene. The initial reliability was higher with an alpha of 0.92. Again, removing one item would increase the reliability by 0.019. Analysis of factor loadings revealed the same results as before, thus I proceeded to validate the three-parcel approach. The reliability of pre assault intention, during assault intent, and post assault intent showed high reliabilities of 0.90, 0.93 and

0.83, respectively. The reliability of the overall scale of bystander intention to intervene at 3-month follow-up was 0.87, with factor loadings from 0.89 to 0.94.

Bystander Perceived Behavioral Control

Analysis of mean score for perceived behavioral control (PBC) with pre-intervention data showed a reliability alpha of 0.90, with a 3-factor solution with eigen values greater than 1. The factor loading showed a similar result as the analysis of the intention variable; the same item showed to be a weak item, although dropping it only increased the reliability by 0.010. The analysis of pre assault PBC resulted in a reliability alpha of 0.83 with a one factor solution. Loadings ranged from 0.81 to 0.84. For the during assault PBC the reliability estimate was 0.91, with factor loadings from 0.87 to 0.90. As for the post intervention analysis, the three items provided a lower alpha of 0.63. Consistent with previous results dropping one item would increase the alpha by 0.1133. After dropping the same item, the alpha coefficient increased to 0.75 with both factor loadings of 0.89. The three-parcel solution for the PBC provided a final reliability estimate of 0.75 with factor loadings of 0.78 to 0.89. From these results, a two-parcel solution may provide higher reliability, however the identified parcels have an underlying meaning for each dimension, thus the three-parcel solution was retained.

The same analysis was done for bystander PBC at 3-month follow-up to confirm consistency of the results through time. The all item solution resulted in an alpha of 0.93 with two factors tapping one dimension. Factor loadings showed a similar pattern for a three-parcel solution. The results were consistent with pre-intervention results with consistent alpha and factor loadings for the three subscales pre assault PBC, during assault PBC and after assault PBC, with alpha estimates of 0.90, 0.94, and 0.83, respectively. These results provided higher reliability estimates than before, with a final scale with overall reliability of 0.81.

Bystander Attitudes Towards Intervening

The mean score analysis of bystander attitudes towards intervening at pre-intervention provided an overall alpha of 0.91 for the 10-item solution (without the previously identified item that was dropped in previous analysis). The analysis showed a two-factor solution although the pattern matrix showed a potential for the three-factor solution. The reliability estimates for the three parcels were 0.87 for pre assault attitudes, 0.87 for during assault attitudes, and 0.78 for post assault attitudes. The full reliability estimates for the scale at pre-test had a reliability alpha of 0.83. For 3-month follow up, the 10-item scale showed a high reliability of 0.93 for a two-factor solution with the same pattern as in pre-intervention results. The reliability estimates for the three parcels was 0.87 for pre assault attitudes, 0.91 for during assault attitudes, and 0.87 for post assault attitudes. The full reliability estimates for the scale at 3-month follow up had a reliability alpha of 0.87.

Bystander Subjective Norms on Intervening

The mean score analysis of social norms on bystander intervention at pre-intervention had an overall alpha of 0.92 for the 10-item solution (without the previously identified item that was dropped in previous analysis). The analysis showed a two-factor solution although the pattern matrix showed a potential for the three-factor solution. The reliability estimates for the three parcels were 0.85 for pre assault attitudes, 0.86 for during assault attitudes, and 0.84 for post assault attitudes. The full reliability estimate for the scale was 0.86. At 3-month follow up, the 10-item scale showed a high reliability of 0.95 for a one-factor solution. However, for consistency of analysis the same three subscales were analyzed. The reliability estimates for the three parcels was 0.91 for pre assault attitudes, 0.92 for during assault attitudes, and 0.92 for post assault attitudes. The full reliability estimates for the scale at 3-month follow up was an alpha of 0.92.

All scales were highly correlated to each other ($r>0.44$), except for Attitudes and PBC ($r>0.37$).

Table C1

Correlations between scales for each of the outcomes.

	SN	Att	PBC	Intent
SN	-			
Att	0.46***	-		
PBC	0.44***	0.37***	-	
Intent	0.56***	0.64***	0.52***	-

***p<0.001

Appendix D: Literature Review

The significance of Improving Sexual Violence Prevention Programs on College Campuses

Millions of people experience sexual violence around the world (Garcia-Moreno et al., 2006; Organization, 2013). The National Intimate Partner and Sexual Violence Survey State Report estimated that in the US, from 2010 to 2012, 1 in 3 women (36.3%) and 1 in 6 men (17.1%) had experienced some form of sexual violence during their lifetime (Smith et al., 2017). More than 70% of women that reported having experienced completed rape had their first victimization before they were 24 years old. In most cases (44.9%), an acquaintance was the perpetrator, and around 91% of them were male (Smith et al., 2017). A recent survey estimated that from 2014 to 2015, 1 in 5 women, 1 in 14 men, 1 in 4 transgender students, and 1 in 3 bisexual students had an experience of sexual assault while in college (Krebs et al., 2016). The prevalence of sexual violence varies between universities, states, year of survey implementation, and other factors. However, the real magnitude of sexual violence experienced by college students is unknown since approximately 85-90% of victims do not report (Fisher et al., 2000). One fact remains, a significantly high number of youth and young adults experience sexual violence every day.

The health impacts of sexual violence can be long-term and can increase health risk for the victims. Some of the physical consequences include unwanted pregnancies, chronic pain, gastrointestinal disorders, gynecological complications, sexually transmitted infections, cervical cancer and genital injuries (Jewkes, 2002; Mcfarlane et al., 2005). The victims of sexual violence can experience immediate psychological trauma that can be chronic, including stress, anxiety, depression, and attempted or completed suicide (Littleton et al., 2009). The consequences of trauma experienced by college students coupled with the stresses of their development as adults and the college experience itself can have significant ramifications for their academic and professional success. There is evidence that women who have experienced sexual assault are

more likely to have lower GPA; and that negative academic performance is associated with the severity of the sexually violent experience (Baker et al., 2016; Jordan, 2011).

Sexual violence is a significant public health issue that impacts individuals, institutions, and society as a whole. Although the number of college students experiencing sexual violence today is alarmingly high it is not a new event. The challenge exists in finding ways to engage individuals, communities, institutions, and governments to accept sexual violence as a critical issue and act; change the norms and attitudes about sexual violence and remove the stigma upon reporting acts of sexual violence.

Bystander Intervention as a Campus Wide Prevention Strategy

A bystander is a witness of potential or actual misconduct, emergency, crime, or high-risk situation, who is not the perpetrator or the victim. Specifically, in the case of sexual violence, a bystander is someone who has the opportunity to intervene in the presence of a potential or actual sexually violent situation that is being experienced and perpetrated by others. Thus, the bystander model makes the community part of the solution by centering sexual violence prevention on the bystanders, and their ability to act before, during or after situations where they see there is a risk of violence. Research has found that the bystander intervention strategy for sexual violence prevention is a promising approach to change the culture of violence on college campuses (DeGue et al., 2014; Katz & Moore, 2013).

Banyard et al. (2004) proposed a bystander intervention model based on the premise that by transforming broader community social norms and engaging more people sexual violence can be prevented. Latané and Darley (1970) studied the reasons why bystanders are motivated to intervene, who intervenes, and in which situations bystanders interventions occur. All of these authors work on the bystander model has been applied to sexual violence prevention and has been the basis for the development of bystander intervention programs throughout the US and beyond.

Multiple studies have shown that bystander education programs can be effective in preventing sexual violence on college campuses. A meta-analysis analyzed the effect of bystander education programs to promote positive bystander outcomes among those who participated compared to those who did not. In this study Katz and Moore (2013), found bystander education programs to affect both bystander and rape-related outcomes. These programs had moderate effects in increasing bystander efficacy and intent to help, and smaller effects on bystander behaviors and rape-supported attitudes, like acceptance of rape myths. Not many bystander intervention programs have been rigorously evaluated to identify their effectiveness to increase bystander intervention behaviors, and the intervention components necessary for it to be successful (Anderson & Whiston, 2005; Banyard et al., 2007; DeGue et al., 2014; Katz & Moore, 2013; McMahon, 2015a; Shaw & Janulis, 2016). Evaluations are costly and time-consuming, which makes it an unfeasible feat to accomplish for many colleges that nevertheless, with limited resources, have developed programs for their students.

Although there is evidence of the effectiveness of the bystander model on sexual violence prevention, the theoretical frameworks that guide how bystander behaviors occur are still under study. Some researchers have started modeling bystander behaviors utilizing the Theory of Planned Behavior (TPB; Ajzen, 1985, 1991) as a theoretical framework using cross-sectional and longitudinal data with promising results (Hoxmeier et al., 2016; McMahon, Peterson, et al., 2015). More research is needed to understand the contribution of bystander attitudes, subjective norms and perceived behavioral control to bystander intervention intentions and bystander behaviors. Labhardt et al. (2017) in a literature review of bystander behaviors and sexual assault discussed the apparent relationship between TPB model predictors and bystander behaviors; however, limited research is available. Utilizing a theoretical framework and longitudinal data can provide evidence of the factors to address in prevention using bystander intervention training.

Definition of Sexual Violence

There is a lack of consensus among experts, policies, and institutions on the definition of sexual violence and how it should be measured. For example, from 1927 to 2012 the FBI's Uniform Crime Report Summary Reporting system (FBI UCR) used to define rape as "the carnal knowledge of a female, forcibly and against her will." The new definition of rape was changed to "the penetration, no matter how slight, of the vagina or anus with any body part or object, or oral penetration by a sex organ of another person, without the consent of the victim." The new definition acknowledges that not all victims are male/female and specifies that all people involved need to consent to any sexual act. However, the new definition does not acknowledge other forms of sexual violence, including sexual harassment and touching without penetration.

In 2002, the CDC published a report establishing their definition of sexual violence. The CDC defines sexual violence as "a sexual act that is committed or attempted by another person without freely given consent of the victim or against someone who is unable to consent or refuse. It includes forced or alcohol/ drug facilitated penetration of a victim; forced or alcohol/drug facilitated incidents in which the victim was made to penetrate a perpetrator or someone else; nonphysically pressured unwanted penetration; intentional sexual touching; or non-contact acts of a sexual nature. Sexual violence can also occur when a perpetrator forces or coerces a victim to engage in sexual acts with a third party." (Basile et al., 2014). This definition includes multiple acts of sexual violence and acknowledges the role alcohol and other drugs in giving or asking for consent.

The Clery Act defines sexual assault (sexual offenses) as "any sexual act directed against another person, without the consent of the victim, including instances where the victim is incapable of giving consent" (U.S. Department of Education, Office of Postsecondary Education, 2016). This definition of sexual assault includes rape, fondling, incest, and statutory rape. This definition of sexual assault is very similar to the definition of sexual violence provided by the

CDC. However, the Clery Act utilizes more specific definitions defined by VAWA of 1994 and the FBI UCR, to facilitate classification of offenses. Higher education institutions, colleges, and universities may decide to use other definitions for their purposes, but for classification and count incidents have to be based on the definitions specified by the Clery Act.

In this study, we utilize the definition stated by the CDC aligned with the definition of sexual misconduct of the institution where this study is taking place. They define sexual misconduct as "sexual harassment, non-consensual sexual contact, non-consensual sexual intercourse, non-consensual sexual activity, sexual exploitation, intimate partner violence, and stalking" (Oregon State University, 2017).

Sexual Violence Prevention on College Campuses

The sexual violence prevention programs that have been implemented and evaluated on college campuses vary significantly in length, content, delivery, emphasis on gendered content (e.g., gender-neutral vs. traditional social norms about masculinity), target audience, single vs. mixed gender groups, evaluated outcomes and program efficacy.

Research has found that most of the sexual violence experienced by students on college campuses occurs during the first few months in college. This period is recognized to be the "red zone" by sexual violence preventionists, where some college students engage in high-risk behaviors, in both party and non-party contexts (Flack et al., 2008). Sexual violence does not occur because of the actions of victims, but it is a time where multiple factors play together to provide more opportunities for violence to occur, including parties, alcohol consumption, new environment, and pledging (to any student/non-student organization including fraternity and sororities). Consequently, students participate in most of the sexual violence prevention programs during the first months after college starts, with about 54% of participants being in their first year in college (Katz & Moore, 2013).

Most of the sexual violence prevention programs implemented on college campuses that have been evaluated and published have been delivered to mostly White-American students (DeGue et al., 2014). Thus, it is essential to consider that the evidence provided about the effectiveness of these programs is specific to a cultural context of the homogenous mostly White American population of college students. One example of particular cultures within colleges is fraternities and sororities. They have been found to be groups with a high prevalence of sexual violence experiences (Bannon et al., 2013). These groups are considered high risk since there is a culture of alcohol use, partying and secrecy (Foubert & Perry, 2007). There is also evidence that these groups endorse more hyper-masculine norms and have a higher acceptance of myths about rape, especially fraternity men (Foubert & Perry, 2007; Kalof, 1993). Although these characteristics are known, these are not the only groups or individuals on a college campus with these traits, but these groups have been more targeted due to the evident culture of violence.

Some research in sexual violence prevention on colleges has found that prevention programs that have multiple sessions may be more effective than those that have one (L. A. Anderson & Whiston, 2005; V. L. Banyard et al., 2007); although, more research is needed since the effects are mixed and may be program specific. In a review of bystander prevention programs, Storer (2016) found that brief interventions can be moderately effective in increasing bystander behaviors and change attitudes, although more extended interventions did produce higher effect sizes. Conducting multi-session programs in a college environment is sometimes less feasible and resource intensive. The program I will be evaluating has a duration of 2-hours; although, the implementers of the program plotted a multi-year approach to bystander intervention that includes multiple different points of contact throughout students' academic career and utilizing other varied prevention strategies (e.g., social marketing campaigns). However, this research questions are outside the scope of this study, since not all students will experience all contacts, and BGAD is one touch point that currently has the broadest reach, this will be my focus.

There is some debate about having gender-neutral content or a focus on traditional masculine social norms. Focusing on gender-neutral content provides the opportunity to move from conventional social norms about masculinity to an emphasis on a community approach to prevention. Some programs that have been found useful in increasing bystander intervention behaviors, like Bringing in the Bystander and Green Dot, have a gender neutral and community approach in their curriculum (V. L. Banyard et al., 2007; Coker et al., 2016; Storer et al., 2016). Although the effectiveness of this approach, over the traditional hyper-masculine approach, has not been evaluated, these programs have been able to demonstrate moderate effectiveness over time and in multiple campus settings (Coker et al., 2016). The approach is not to ignore that there are traditional gender norms and a culture of rape that victimizes specific groups over others and that most perpetrators are males. It is expected that students, early in their academic career, are in an excellent position to see sexual violence as a (un) gendered community issue, that victims are from multiple genders, and that the responsibility to end violence is on everyone, not only the female victims or the male perpetrators. In this study, I will utilize measures that are gender-neutral, to capture bystander intervention regardless of the gender of the victim and perpetrator to be consistent with the gender-neutral content of the program under evaluation.

Similarly, some sexual violence programs are single- or mixed-gender groups. There is no evidence that bystander prevention programs implemented on single-gender groups are more effective than mixed-gender groups, or vice versa (Storer et al., 2016). In some bystander intervention focused programs, selecting one approach to delivery versus the other has been justified, although no evidence of their effectiveness exists In line with the argument that bystander intervention in sexual violence situations is a community approach and not focused on one gender, programs may benefit from mixed-gender groups. However, there is no evidence of this, and it is outside of the focus of my study but have considered it since the program under evaluation has been delivered mostly to single-gender groups, to both males and females.

Most bystander intervention programs to prevent sexual violence use different measures for their outcomes, including bystander intervention behaviors (DeGue et al., 2014; McMahon et al., 2014; Storer et al., 2016). Having proper measures is essential for the evaluation of bystander intervention behaviors, since there is evidence that bystander intervention may be situation specific and influenced by multiple factors, like if the victim is a friend or a stranger (Hoxmeier et al., 2016; McMahon, 2015a). Thus, the measures utilized in this study will consistently ask students about their attitudes for the same bystander intervention behaviors.

Theoretical Background of Bystander Strategy to Prevent Sexual Violence

Most sexual violence prevention studies, including those of bystander intervention training programs, do not have clear theoretical frameworks (Anderson & Whiston, 2005; DeGue et al., 2014; Storer et al., 2016). Thus, there are multiple researchers invested in developing theoretically sound models to predict bystander intervention behaviors and guide their development and evaluation (see Banyard, 2015; Hoxmeier et al., 2016; McMahon, 2015). Since the 60's, studies on bystander intervention behaviors have shaped our understanding of the theory behind bystander intervention in the context of sexual violence.

Early Bystander Theories and the Situational Model

The main proponents and researchers of the bystander intervention model, to engage people to intervene to help others, were Latané and Darley (1970). These authors studied what motivates bystanders to intervene, who intervenes, and in which context bystanders intervene, although not related to sexual violence. They found that norms had a significant impact on bystander intervention. The subjective norms, perceptions of what others close to the person or a group think about intervening or not, may be situation specific and affected by students' attitudes towards the person in need, as well as norms specific to their own culture. They also explored how the responsibility of intervening can be diffused in large groups of people, with bystanders being less likely to help due to their expectation that someone else would intervene. From this

research, Latané and Darley (1970) described a situational model of multiple stages, where individuals decide to intervene or not in a situation where someone needs help. The model establishes that before intervening, the bystander needs to identify the event, assess if intervening is warranted, take responsibility for the intervention, decide what the best approach to intervening and taking action is. If the bystanders were able to go through these steps without encountering any barriers, then they would intervene. The situational model of bystander intervention has been utilized by other researchers as a framework and adapted to sexual violence prevention strategies (Banyard, 2011; Burn, 2009).

One important study was done by Shawn Burn (2009), who studied whether barriers identified by the situational model were correlated with bystander intervention in sexually violent situations by undergraduate students. She found that the barriers were associated with fewer reported bystander behaviors. She also found that males encountered more barriers than females, except for the barrier of lacking the skills to intervene, which was not significant for males. She found that women were less likely to intervene if they had lower perceived behavioral control. She also found that both males and females were less likely to intervene if they perceived less responsibility for the situation and intervened more with friends. This is evidence that barriers to intervening are different between males and females. However, the study does not distinguish between those who had the opportunity to intervene and those that did not. Thus, in the event of having the opportunity or experience, will these results hold? Also, the study measures of bystander behaviors presented females as the sole victims and males as the perpetrators, as well as, males and not females being the only ones able to intervene with friends who are engaging in actions that require intervention; with females only protecting those who might be victimized. From this perspective, bystander intervention behaviors are also gendered, although there is no evidence supporting that claim. There is evidence that female students have higher intent to intervene in situations before, during and after an assault (Hoxmeier et al., 2016).

Bystander intention to intervene has been found to be positively associated with bystander behaviors (Brown et al., 2014), although some may have been situation specific (Hoxmeier et al., 2016). Students may overestimate their intention to intervene in situations that they have not experienced before and, once they did experience the situation, did not take action. Researchers have found that attitudes that disapprove of rape (Hahn et al., 2016), perceived behavioral control to intervene (Hahn et al., 2016; Hoxmeier et al., 2016), and peer norms that approve of intervening (Brown et al., 2014) are associated with increased bystander intention to intervene and bystander behaviors of college students over time (McMahon, Peterson, et al., 2015). Also, bystanders that are more likely to intervene have lower acceptance of rape myths, sense of responsibility for the situation, high self-efficacy to intervene, and have been a victim or know someone who has (V. L. Banyard, 2008; Burn, 2009; McMahon, 2010). However, the relationship of all of these factors within a behavioral theoretical framework has not been tested yet, and the contribution of all of these factors collectively is unknown.

The Theory of Planned Behavior and Bystander Intervention Behaviors

The Theory of Planned Behavior (TPB; (Ajzen, 1985, 1991; Ajzen & Fishbein, 1980) utilizes proximal level factors, that are closely related to, and predict individuals' behaviors. This theory is based on the prospect of cognitive self-regulation in the context of dispositional approach, related to behaviors that are under volitional control (Ajzen, 1991). That is that, if given the opportunity and having the appropriate resources, paired with enough motivation or willingness, the behavior will be performed. The TPB explains that to do a behavior there needs to be both an intention to do that specific behavior and perceived control of that behavior. The TPB has been widely used to predict behaviors, including physical exercise, nutrition, sexual behaviors (Steinmetz et al., 2016), and more recently bystander intervention (Hoxmeier et al., 2016). Following this theory, having positive attitudes and subjective norms towards bystander intervention and greater perceived behavioral control predicts stronger intention to intervene if

they witness a potential or actual sexually violent situation. The relative importance of each of these factors varies across behaviors, and for bystander intervention in sexual violence is under study and still unknown. I will explain these predictors in the context of bystander behaviors below.

Bystander Attitudes towards Intervening

Under the TPB, attitudes towards bystander intervention are associated with beliefs about the unfavorable or favorable appraisal of a specific behavior, however positive or negative the bystander perceives them. Bystander attitudes towards intervening have been found associated with bystander behaviors, both before and after bystander training interventions (V. L. Banyard, 2008). Thus, understanding bystanders' perception of how helpful or unhelpful intervening may be can help predict if the bystander will take action.

There are some negative attitudes related to myths about rape that are associated with endorsement of sexual violence behaviors and low bystander behaviors (McMahon, 2010). These rape myth attitudes are beliefs that are stereotyped views about sexual violence that assign the blame to the victim, normalize rape behavior, and excuse sexual assault (Burt, 1980). It has also been defined more specifically as false beliefs that justify sexual violence from men to women (Lonsway & Fitzgerald, 1994). Although sexual violence perpetrated by men against women is very prevalent, rape myths are assigned to people of any gender, beyond the usual binary definitions.

Utilizing the TPB (TPB; Ajzen, 1985) as a framework, rape myths can be considered as beliefs that shape students attitudes toward intervening if they witness an actual or potential sexually violent situation. This is consistent with the expectancy-value model of attitudes (Fishbein & Ajzen, 1975), in that positive or negative beliefs about rape shape the attitudes toward bystander intervention. Although it is expected that rape myths will be directly proportional to attitudes towards bystander intervention (Ajzen, 1991), attitudes may be also

influenced by other beliefs. A study performed with undergraduate students found that higher rape myth acceptance was negatively associated with willingness to intervene when students witnessed sexual violence situations (Banyard & Moynihan, 2011a; McMahon, 2010). Male students have reported higher rape myth acceptance, students in a fraternity or sorority, athletes, students that have not participated in sexual violence education and those who do not know someone that has been sexually assaulted (McMahon, 2010). These findings suggest that there is a role of gender that can be important in sexual violence prevention, and specifically bystander intervention prevention strategies. Thus, rape myth acceptance has become an essential element to include in bystander training and the assessment of the culture of sexual violence.

Bystander Subjective Norms

Subjective norms are perceived social pressures and perceptions individuals have of what friends, or those important to the person, about performing or not a behavior (Ajzen, 1991). Bystander subjective norms have been found to be associated with intention to intervene (Brown et al., 2014; Hoxmeier, 2015); and associated to some bystander behaviors (Hoxmeier, 2015). Previous research has found that students' perceptions of their peers' beliefs influence bystander intervention for men (Brown et al., 2014). Also, studies have found that norms have a big impact on bystander intervention, making intervention dependent on whether the action is accepted or not by peers or people present (Latané & Darley, 1970). The norms associated to the intervention may be situation specific (Hoxmeier et al., 2016) and affected by students' attitudes towards the person in need, as well as norms associated to their own culture (Latané & Darley, 1970).

Bystander Perceived Behavioral Control to Intervene

Perceived behavioral control has been theorized to influence and predict a person's subjective degree of control to perform a specific behavior (Ajzen, 1991, 2002b; Bandura, 1986). Perceived behavioral control, is similar to Bandura's (1986) self-efficacy, in that an individual will take action if they have the confidence to intervene (Ajzen, 2002a). Although perceived

behavioral control also includes perceived difficulty or ease of performing a task (Ajzen, 2002a). There is evidence that students who reported intervening in the past also reported higher perceived behavioral control and greater intention to intervene in the future than those who did not intervene when they had the opportunity (Hoxmeier et al., 2016). Students who are confident in their ability to intervene are more likely to report intervention behaviors (V. L. Banyard, 2008). Banyard (2008) found an association between bystander efficacy and bystander behaviors, after two months, in a sample of college students. Gender differences in self-efficacy to perform bystander behaviors have been mixed, with some finding that females report higher bystander efficacy than males (Amar, Sutherland, & Laughon, 2014b), and others that bystander efficacy is not a barrier to intervene for men and it is for females (Burn, 2009). There has been some debate about the concept of perceived behavioral control. Some researchers have found that efficacy and not control is associated with intentions and behaviors (Trafimow et al., 2002), and others have found that self-efficacy measures are confounded with intentions, and that is why there is a stronger relationship with behavior than control (Rhodes et al., 2006). Thus, in this study, we focused on a measure of perceived behavioral control, as conceptualized in the TPB, and will consider this discussion in the interpretation of my findings.

Bystander Intention to Intervene

The TPB frames intention as the predecessor of behavior, where the person can do the behavior if sufficiently motivated and willing to do so (Ajzen, 1991). Bystander intention to intervene refers to the self-reported willingness to intervene when the person witnessed a potentially high-risk or actual sexual violence situation. Reported bystander willingness to intervene in hypothetical sexual violence situations can be higher than when it is experienced (McMahon et al., 2014). Bystander intention to intervene is influenced by rape myth attitudes, subjective norms, and bystander perceived behavioral control (Hoxmeier et al., 2016; McMahon, Peterson, et al., 2015). Victoria Banyard (2008) found evidence that undergraduate students who

reported higher bystander behaviors had lower rape myth acceptance and higher confidence to intervene. She also found evidence that intention to intervene was a predictor of future self-reported bystander behaviors. These findings are limited by the lack of information on the association of intention to intervene with specific bystander behaviors, as well as no consideration in the analyses of students' opportunities to intervene. Bystanders intention is a predictor of bystander behaviors if the person has positive attitudes towards intervening, high perceived behavioral control or positive subjective norms towards intervening (Ajzen, 1991; Latané & Darley, 1970) . Thus, the intention may not be a sole predictor of behavior and may only be considered with these other factors in consideration (Labhardt, Holdsworth, Brown, & Howat, 2017). This assumption is important to the current evaluation since, following the TPB, it is hypothesized that the program will be effective in increasing bystander behaviors only by affecting the predictors of intention and increasing perceived behavioral control to intervene.

Bystander Intervention Behavior

Bystander intervention behaviors are those actions taken by bystanders to intervene in potentially high-risk or actual sexual violence situations. These interventions can happen before, during or after some sexual violence has occurred (McMahon et al., 2014). If a bystander notices the situation, identifies it as a potential opportunity to intervene, takes responsibility and decides to intervene, they will potentially take action (Latané & John M. Darley, 1970). Any barrier in this process will potentially disrupt bystander intervention (Burn, 2009). Previous research has found that higher bystander intention to intervene and actual bystander behaviors are associated with being a woman and having participated in sexual violence prevention education and if they or someone they know have had a previous experience of sexual violence (Banyard, 2008). These factors are concordant to the TPB model in that there may be residual effects of past experiences may influence behaviors, although, these are attenuated if intentions are strong (Ajzen, 2002b). Also, intervening events may have an effect on intentions and perceived behavioral control

(Ajzen, 1991), thus these variables should be included in the analysis. Thus, while considering these factors, if a student perceives to have control over the situation, has positive subjective norms and attitudes towards intervening, and consequently is willing to intervene, the student will take action (Ajzen, 1991; Banyard & Moynihan, 2011; Latané & Darley, 1970).

Recent Contributions to Research on TPB and Bystander Behaviors

Hoxmeier, Flay, and. Acock (2016) studied differences in perceived behavioral control, subjective norms, attitudes towards intervening and intention to intervene between students that did intervene and those that did not. They developed the Sexual Assault Bystander Behavior Questionnaire (SABBQ), following the TPB (Ajzen, 1985) as a framework. This study was done in a university located in the Pacific Northwest, with a sample of 815 undergraduate students. Multiple papers have been published from the original dissertation (Hoxmeier, Acock, & Flay, 2017; Hoxmeier, Flay, & Acock, 2015; Hoxmeier et al., 2016). One important research question Hoxmeier answered was how different students who intervened were from those that did not when given the opportunity to do so. Her results showed that, in fact, interveners had greater perceived behavioral control, positive subjective norms and positive attitudes towards intervening than non-interveners (Hoxmeier et al., 2016). However, this was not true for all the bystander behaviors that were measured, evidencing that these predictors may be situation specific. For example, for the bystander behavior to "confront your friend who says he plans to get a girl drunk to have sex," perceived behavioral control, subjective norms and intent were associated to interveners, compared to non-interveners, although no significant differences in attitudes were found (Hoxmeier et al., 2016). Thus, for some behaviors the TPB framework was consistent, and for others, it was not. Therefore, these studies also provided evidence that although the TPB may be consistent for some behaviors, it may not be for others. Students that had the opportunity to intervene, and did intervene, did not necessarily have higher perceived behavioral control, positive subjective norms and positive attitudes towards intervening for the same behaviors

(Hoxmeier et al., 2015). Future research utilizing longitudinal data is needed to establish causal relationships between the predictors of the TPB and bystander behaviors, which is one of the objectives of my research. These studies also provided evidence that students were more likely to intervene in situations where their friends were the victim and before a sexually violent situation happened, and less likely to intervene when their friend was the perpetrator and during an actual sexually violent situation (Hoxmeier et al., 2016); which is consistent with previous studies (Banyard & Moynihan, 2011; Burn, 2009). Also, they found that more students did not intervene when the victim was intoxicated. Alcohol is involved in many violent situations, and it is definitively involved in sexual violence. Understanding how bystanders intervene if the victim or perpetrator is intoxicated is an important contribution to the bystander literature. The association of bystander intervention or bystander attitudes towards intervening, with acceptance of rape myths was not explored, although there is evidence that increased acceptance of rape myths and norms, including those related to alcohol use, may be preventing bystander intervention in certain situations (Katz & Moore, 2013). For example, someone may have the belief that if a girl gets drunk, it is her responsibility if she is a victim of sexual violence since she is at least somewhat responsible for letting things out of hand (Payne, Lonsway, & Fitzgerald, 1999), and consequently the bystander may have the belief that it is not their responsibility to intervene and find it unhelpful, then does not intervene.

Hoxmeier (2015) found that the theory of planned behavior explained greater variance than the situational model, as measured by Burn (2009) and that all variables were associated with intent to intervene, although not with actual behaviors. This research has provided great contributions to the literature and understanding of interveners. However, the cross-sectional nature of the study limits causal inferences and makes it difficult to provide a model of how all of these variables fit in a framework of bystander behavior to prevent sexual violence.

Katz and Moore (2013) did a meta-analysis looking at the effects of bystander prevention programs in increasing bystander intervention related outcomes. They found that bystander intervention programs have provided evidence of moderate effects increasing bystander perceived behavioral control to intervene and bystander intentions to intervene, and small effects on bystander behaviors. Also, they found that very few program evaluations included bystander behavior measures and provided evidence of effects over time.

Labhardt and colleagues (2017) did a literature review to identify factors associated to bystander intervention. They found that the variables considered under the TPB (Ajzen, 1985) were not all measured in any of the studies included in the review. McMahon et al. (2015) did study the relationship between bystander efficacy and bystander intent in the evaluation of a bystander intervention program that utilizes theater for peer education. They provided evidence of an autoregressive relationship between these variables, meaning that there is a complex association of perceived behavioral control and intention more than linear causal pathways as explained by the TPB. However, the models included in this study did not account for the contributions of bystander attitudes and rape myth acceptance, and bystander subjective norms towards intervening. Another limitation of this study is that their efficacy measures had different items than the bystander intention and behavior scales. Thus, the causal relationship of these variables may be associated to different bystander behaviors, as explained by Hoxmeier's research (Hoxmeier, 2015). Also, although McMahon's study utilized an experimental randomized design, they did not have a true control group. Thus, all students participated in some type of training related to sexual violence. Research and outcome evaluations utilizing a longitudinal design are needed, with true control groups to understand bystander intervention and the impact of prevention programs over time.