DEFLECTION AND STRESSES IN A UNIFORMLY LOADED, SIMPLY SUPPORTED, RECTANGULAR SANDWICH PLATE

Original report dated December 1955

Information Reviewed and Reaffirmed

September 1962

No. 1847

This Report is One of a Series Issued in Cooperation with the ANC-23 PANEL ON SANDWICH CONSTRUCTION of the Departments of the AIR FORCE, NAVY, AND COMMERCE

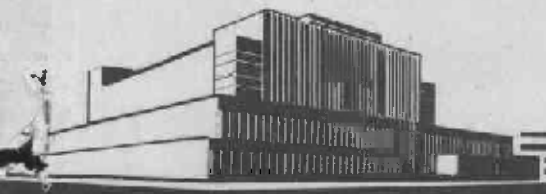

FOREST PRODUCTS LABORATORY
MADISON 5, WISCONSIN

UNITED STATES DEPARTMENT OF AGRICULTURE
FOREST SERVICE
In Cooperation with the University of Wisconsin

DEFLECTION AND STRESSES IN A UNIFORMLY LOADED, SIMPLY SUPPORTED, RECTANGULAR SANDWICH PLATE[1]

By

MILTON E. RAVILLE, Engineer

Forest Products Laboratory,[2] Forest Service
U. S. Department of Agriculture

Summary

A theoretical solution is presented for the deflection and stresses in a uniformly loaded, simply supported, rectangular sandwich plate. The solution is applicable to sandwich plates having an orthotropic core of arbitrary thickness and isotropic facings. The facings may be of equal or unequal thickness. Numerical results and curves are included.

Introduction

The purpose of this report is to obtain formulas from which the deflection and stresses in a uniformly loaded, simply supported, rectangular sandwich plate may be computed. The sandwich plate is assumed to consist of isotropic facings separated by and bonded to an

---

[1]This report is one of a series (ANC-23, Item A-7) prepared and distributed by the Forest Products Laboratory under U. S. Navy Bureau of Aeronautics Order No. NAer 01684 and U. S. Air Force No. AF-18(600)-102, Amendment A6(55-286). Results here reported are preliminary and may be revised as additional data become available. Original report dated December 1955.

[2]Maintained at Madison, Wis., in cooperation with the University of Wisconsin.

orthotropic core. The core is considered to have such a small load-carrying capacity in the plane of the plate as compared to that of the facings that the normal stresses in the core in the plane of the plate and the shear stresses in the core on planes perpendicular to the facings and in directions parallel to the facings may be neglected. The analysis of the facings is based on the usual small deflection theory of laterally loaded plates.

Notation

x, y, z	rectangular coordinates (fig. 1)
a	width of sandwich plate
b	length of sandwich plate
ρ	$\frac{a}{b}$
c	thickness of core
t_1	thickness of upper facing
t_2	thickness of lower facing
E	modulus of elasticity of facings
ν	Poisson's ratio of facings
E_c	modulus of elasticity of core in z direction
G_{xz}	modulus of rigidity of core in xz plane
G_{yz}	modulus of rigidity of core in yz plane
q	intensity of uniform external lateral loading
σ_z	normal stress in core in z direction
τ_{xz}, τ_{yz}	shear stresses in core

ϵ_z	normal strain in core in z direction
γ_{xz}, γ_{yz}	shear strains in core
u_c, v_c, w_c	displacements of core in x, y, and z directions
N_x, N_y, N_{xy}	normal forces and shear force per unit length of upper facing
N'_x, N'_y, N'_{xy}	normal forces and shear force per unit length of lower facing
M_x, M_y, M_{xy}	bending moments and twisting moment per unit length of upper facing
M'_x, M'_y, M'_{xy}	bending moments and twisting moment per unit length of lower facing
Q_x, Q_y	transverse shear forces per unit length of upper facing
Q'_x, Q'_y	transverse shear forces per unit length of lower facing
u, v, w	displacements of upper facing in x, y, and z directions, respectively
u', v', w'	displacements of lower facing in x, y, and z directions, respectively
ϵ_x, ϵ_y, γ_{xy}	normal strains and shear strains in upper facing
ϵ'_x, ϵ'_y, γ'_{xy}	normal strains and shear strains in lower facing
m, n	integers
A_{mn}, B_{mn}, C_{mn}, F_{mn}, H_{mn}, K_{mn}, L_{mn}	constants

k $$\frac{16qa^4 (1-\nu^2)}{\pi^6 EI}$$

I $$\left(\frac{t_1 t_2}{t_1 + t_2}\right)\left(c + \frac{t_1 + t_2}{2}\right)^2$$

S_x $$\frac{\pi^2 Ect_1 t_2}{G_{xz} a^2 (1-\nu^2) (t_1 + t_2)}$$

S_y $$\frac{\pi^2 Ect_1 t_2}{G_{yz} a^2 (1-\nu^2) (t_1 + t_2)}$$

Theoretical Analysis

The dimensions of the sandwich plate and the coordinate system used in the analysis are illustrated in figure 1. The method of analysis consists of determining expressions for the core displacements that satisfy the core equilibrium equations and the boundary conditions. The arbitrary constants that appear in these expressions for the core displacements are then evaluated from consideration of the equilibrium of the facings in conjunction with the requirement that the displacements of the core and facings be equal at their mutual interfaces.

Equilibrium of the Core

A differential element of the core is shown in figure 2. In accordance with the assumptions outlined in the Introduction, σ_x, σ_y, and τ_{xy} in the core are assumed to be zero. From the summation of forces in the x, y, and z directions, respectively, the following three equilibrium equations of the core are obtained:

$$\frac{\partial \tau_{xz}}{\partial z} = 0 \tag{1}$$

$$\frac{\partial \tau_{yz}}{\partial z} = 0 \tag{2}$$

and

$$\frac{\partial \sigma_z}{\partial z} + \frac{\partial \tau_{xz}}{\partial x} + \frac{\partial \tau_{yz}}{\partial y} = 0 \tag{3}$$

On the basis of Hooke's law, the following stress-strain equations are applicable:

$$\sigma_z = E_c \epsilon_z \tag{4}$$

$$\tau_{xz} = G_{xz} \gamma_{xz} \tag{5}$$

and

$$\tau_{yz} = G_{yz} \gamma_{yz} \tag{6}$$

Also, the strains and displacements are related as follows:

$$\epsilon_z = \frac{\partial w_c}{\partial z} \tag{7}$$

$$\gamma_{xz} = \frac{\partial u_c}{\partial z} + \frac{\partial w_c}{\partial x} \tag{8}$$

and

$$\gamma_{yz} = \frac{\partial v_c}{\partial z} + \frac{\partial w_c}{\partial y} \tag{9}$$

Equations (4) through (9) enable the equilibrium equations of the core, equations (1), (2), and (3), to be expressed as follows:

$$\frac{\partial^2 w_c}{\partial x \partial z} + \frac{\partial^2 u_c}{\partial z^2} = 0 \tag{10}$$

$$\frac{\partial^2 w_c}{\partial y \partial z} + \frac{\partial^2 v_c}{\partial z^2} = 0 \tag{11}$$

and

$$E_c \frac{\partial^2 w_c}{\partial z^2} + G_{xz} \left(\frac{\partial^2 w_c}{\partial x^2} + \frac{\partial^2 u_c}{\partial x \partial z}\right) + G_{yz} \left(\frac{\partial^2 w_c}{\partial y^2} + \frac{\partial^2 v_c}{\partial y \partial z}\right) = 0 \tag{12}$$

The expressions for the core displacements are assumed to be of the following form:

$$u_c = \sum_{m=1}^{\infty} \sum_{n=1}^{\infty} f_1(z) \cos \frac{m\pi x}{a} \sin \frac{n\pi y}{b} \tag{13}$$

$$v_c = \sum_{m=1}^{\infty} \sum_{n=1}^{\infty} f_2(z) \sin \frac{m\pi x}{a} \cos \frac{n\pi y}{b} \tag{14}$$

and

$$w_c = \sum_{m=1}^{\infty} \sum_{n=1}^{\infty} f_3(z) \sin \frac{m\pi x}{a} \sin \frac{n\pi y}{b} \tag{15}$$

It is noted that the above expressions satisfy the boundary conditions that $\underline{w_c = 0}$ at all boundaries and that $\underline{(M_x)_{\substack{x=0\\x=a}} = 0}$, $\underline{(M_y)_{\substack{y=0\\y=b}} = 0}$, $\underline{(u_c)_{\substack{y=0\\y=b}} = 0}$, and $\underline{(v_c)_{\substack{x=0\\x=a}} = 0}$. The three functions of $\underline{z}$ in equations (13), (14), and (15) are determined, as follows, from the requirement that

these equations satisfy equilibrium equations (10), (11), and (12). If equations (13), (14), and (15) are substituted into equations (10), (11), and (12) and it is specified that the resulting equations be valid for all values of x and y, the following equations are obtained:

$$f_1''(z) + \frac{m\pi}{a} f_3'(z) = 0 \tag{16}$$

$$f_2''(z) + \frac{n\pi}{b} f_3'(z) = 0 \tag{17}$$

and

$$E_c f_3''(z) - G_{xz}\left[\frac{m^2\pi^2}{a^2} f_3(z) + \frac{m\pi}{a} f_1'(z)\right] - G_{yz}\left[\frac{n^2\pi^2}{b^2} f_3(z) + \frac{n\pi}{b} f_2'(z)\right] = 0 \tag{18}$$

where the primes denote derivatives with respect to z. From equations (16) and (17)

$$f_1'(z) = -\frac{m\pi}{a} f_3(z) + A_{mn} \tag{19}$$

and

$$f_2'(z) = -\frac{n\pi}{b} f_3(z) + B_{mn} \tag{20}$$

where A_{mn} and B_{mn} are constants of integration. The substitution of the above values of $f_1'(z)$ and $f_2'(z)$ into equation (18) yields the following differential equation:

$$f_3''(z) = \frac{G_{xz}}{E_c}\frac{m\pi}{a} A_{mn} + \frac{G_{yz}}{E_c}\frac{n\pi}{b} B_{mn}$$

Integration of the above equation yields:

$$f_3(z) = \frac{\pi}{2}\left(\frac{G_{xz}}{E_c}\frac{m}{a}A_{mn} + \frac{G_{yz}}{E_c}\frac{n}{b}B_{mn}\right) z^2 + C_{mn}\, z + F_{mn}\, c \quad (21)$$

The functions $f_1(z)$ and $f_2(z)$ can now be determined by substituting the above value of $f_3(z)$ into equations (19) and (20) and performing the indicated integrations. The results are:

$$f_1(z) = A_{mn}\left[z - \frac{\pi^2}{6}\frac{m^2}{a^2}\frac{G_{xz}}{E_c}z^3\right] - B_{mn}\frac{\pi^2}{6}\frac{mn}{ab}\frac{G_{yz}}{E_c}z^3$$

$$- \frac{\pi}{2}\frac{m}{a}C_{mn}\, z^2 - \pi\frac{mc}{a}F_{mn}\, z + H_{mn}\, c$$

and

$$f_2(z) = - A_{mn}\frac{\pi^2}{6}\frac{mn}{ab}\frac{G_{xz}}{E_c}z^3 + B_{mn}\left[z - \frac{\pi^2}{6}\frac{n^2}{b^2}\frac{G_{yz}}{E_c}z^3\right]$$

$$- \frac{\pi}{2}\frac{n}{b}C_{mn}\, z^2 - \pi\frac{nc}{b}F_{mn}\, z + L_{mn}\, c$$

The functions of z that appear in equations (13), (14), and (15) having been determined, it is possible by redefining the arbitrary constants to express the core displacements as follows:

$$u_c = \sum_{m=1}^{\infty}\sum_{n=1}^{\infty}\left[\left(-\frac{m\pi c}{a}\right)\left(\frac{4}{3}A_{mn}\frac{z^3}{c^3} + B_{mn}\frac{z^2}{c^2} + C_{mn}\frac{z}{c}\right)\right.$$

$$\left. + F_{mn}\frac{z}{c} + H_{mn}\right]\cos\frac{m\pi x}{a}\sin\frac{n\pi y}{b} \quad (24)$$

$$v_c = \sum_{m=1}^{\infty} \sum_{n=1}^{\infty} \left[\left(- \frac{n\pi c}{b}\right) \left(\frac{4}{3} A_{mn} \frac{z^3}{c^3} + B_{mn} \frac{z^2}{c^2} + C_{mn} \frac{z}{c}\right) \right.$$

$$\left. + K_{mn} \frac{z}{c} + L_{mn} \right] \sin \frac{m\pi x}{a} \cos \frac{n\pi y}{b} \tag{25}$$

$$w_c = \sum_{m=1}^{\infty} \sum_{n=1}^{\infty} \left[4 A_{mn} \frac{z^2}{c^2} + 2 B_{mn} \frac{z}{c} \right.$$

$$\left. + C_{mn} \right] \sin \frac{m\pi x}{a} \sin \frac{n\pi y}{b} \tag{26}$$

The above expressions for the core displacements satisfy the equilibrium equations of the core if

$$G_{xz}\, m\, F_{mn} + G_{yz}\, n\rho\, K_{mn} = \frac{-8a}{\pi c} E_c A_{mn} \tag{27}$$ *

where $\rho = \frac{a}{b}$.

Thus it is seen that there are actually only six arbitrary constants present in the expressions for the core displacements.

Since, from equations (4) through (9),

$$\sigma_z = E_c \frac{\partial w_c}{\partial z}$$

$$\tau_{xz} = G_{xz} \left(\frac{\partial u_c}{\partial z} + \frac{\partial w_c}{\partial x}\right)$$

and

$$\tau_{yz} = G_{yz} \left(\frac{\partial v_c}{\partial z} + \frac{\partial w_c}{\partial y}\right)$$

the core stresses may be expressed as follows:

$$\sigma_z = \frac{E_c}{c} \sum_{m=1}^{\infty} \sum_{n=1}^{\infty} \left(8 A_{mn} \frac{z}{c} + 2 B_{mn}\right) \sin \frac{m\pi x}{a} \sin \frac{n\pi y}{b} \tag{28}$$

$$\tau_{xz} = \frac{G_{xz}}{c} \sum_{m=1}^{\infty} \sum_{n=1}^{\infty} F_{mn} \cos \frac{m\pi x}{a} \sin \frac{n\pi y}{b} \tag{29}$$

and

$$\tau_{yz} = \frac{G_{yz}}{c} \sum_{m=1}^{\infty} \sum_{n=1}^{\infty} K_{mn} \sin \frac{m\pi x}{a} \cos \frac{n\pi y}{b} \tag{30}$$

In the analysis which follows it is shown that the displacements and stresses in the facings may be expressed in terms of these same arbitrary constants and that these constants can be evaluated from consideration of the equilibrium of the facings.

Equilibrium of the Facings

A differential element of the upper facing of the plate is shown in figure 3; the forces in the plane of the facing are shown in figure 3(a), and the remainder of the forces and the moments are shown in figure 3(b). The summation of forces in the x, y, and z directions yields the following three equations, respectively:

$$\frac{\partial N_x}{\partial x} + \frac{\partial N_{xy}}{\partial y} = - \tau_{xz} \tag{31}$$

$$\frac{\partial N_y}{\partial y} + \frac{\partial N_{xy}}{\partial x} = - \tau_{yz} \tag{32}$$

and

$$\frac{\partial Q_x}{\partial x} + \frac{\partial Q_y}{\partial y} = - q - (\sigma_z)_{z = - \frac{c}{2}} \tag{33}$$

Also, the summation of moments about the $\underline{x}$ and $\underline{y}$ axes, respectively, yields

$$\frac{\partial M_y}{\partial y} - \frac{\partial M_{xy}}{\partial x} - Q_y = - \tau_{yz} \left(\frac{t_1}{2}\right) \tag{34}$$

and, since $\underline{M_{yx} = - M_{xy}}$,

$$\frac{\partial M_x}{\partial x} - \frac{\partial M_{xy}}{\partial y} - Q_x = - \tau_{xz} \left(\frac{t_1}{2}\right) \tag{35}$$

If equations (34) and (35) are solved for $\underline{Q_y}$ and $\underline{Q_x}$ and these values are substituted into equation (33), the result is:

$$\frac{\partial^2 M_x}{\partial x^2} - 2 \frac{\partial^2 M_{xy}}{\partial x \partial y} + \frac{\partial^2 M_y}{\partial y^2} = - q - (\sigma_z)_{z = - \frac{c}{2}}$$

$$- \frac{t_1}{2} \left(\frac{\partial \tau_{xz}}{\partial x} + \frac{\partial \tau_{yz}}{\partial y}\right) \tag{36}$$

The equilibrium equations of the upper facing are thus reduced to equations (31), (32), and (36).

The equilibrium equations that apply to the lower facing are obtained in a similar manner on the basis of figure 4. The summation of forces in the $\underline{x}$, $\underline{y}$, and $\underline{z}$ directions yields

$$\frac{\partial N_x'}{\partial x} + \frac{\partial N_{xy}'}{\partial y} = \tau_{xz} \tag{37}$$

$$\frac{\partial N_y'}{\partial y} + \frac{\partial N_{xy}'}{\partial x} = \tau_{yz} \tag{38}$$

and

$$\frac{\partial Q_x'}{\partial x} + \frac{\partial Q_y'}{\partial y} = (\sigma_z)_{z = \frac{c}{2}} \tag{39}$$

The summation of moments around the $\underline{x}$ and $\underline{y}$ axes yields

$$\frac{\partial M_y'}{\partial y} - \frac{\partial M_{xy}'}{\partial x} - Q_y' = - \tau_{yz} \left(\frac{t_2}{2}\right) \tag{40}$$

and, since $M_{yx}' = - M_{xy}'$,

$$\frac{\partial M_x'}{\partial x} - \frac{\partial M_{xy}'}{\partial y} - Q_x' = - \tau_{xz} \left(\frac{t_2}{2}\right) \tag{41}$$

The substitution of the values of $\underline{Q_y'}$ and $\underline{Q_x'}$ obtained from equations (40) and (41) into equation (39) results in:

$$\frac{\partial^2 M_x'}{\partial x^2} - 2 \frac{\partial^2 M_{xy}'}{\partial x \partial y} + \frac{\partial^2 M_y'}{\partial y^2} = (\sigma_z)_{z = \frac{c}{2}}$$

$$- \frac{t_2}{2} \left(\frac{\partial \tau_{xz}}{\partial x} + \frac{\partial \tau_{yz}}{\partial y}\right) \tag{42}$$

The forces and moments per unit length of the facings are related to the displacements of their respective middle surfaces by the following equations:

$$N_x = \frac{Et_1}{1-\nu^2}\left(\frac{\partial u}{\partial x} + \nu\frac{\partial v}{\partial y}\right) \qquad N'_x = \frac{Et_2}{1-\nu^2}\left(\frac{\partial u'}{\partial x} + \nu\frac{\partial v'}{\partial y}\right)$$

$$N_y = \frac{Et_1}{1-\nu^2}\left(\frac{\partial v}{\partial y} + \nu\frac{\partial u}{\partial x}\right) \qquad N'_y = \frac{Et_2}{1-\nu^2}\left(\frac{\partial v'}{\partial y} + \nu\frac{\partial u'}{\partial x}\right)$$

$$N_{xy} = \frac{Et_1}{2(1+\nu)}\left(\frac{\partial u}{\partial y} + \frac{\partial v}{\partial x}\right) \qquad N'_{xy} = \frac{Et_2}{2(1+\nu)}\left(\frac{\partial u'}{\partial y} + \frac{\partial v'}{\partial x}\right)$$

$$M_x = -\frac{Et_1^3}{12(1-\nu^2)}\left(\frac{\partial^2 w}{\partial x^2} + \nu\frac{\partial^2 w}{\partial y^2}\right) \qquad M'_x = -\frac{Et_2^3}{12(1-\nu^2)}\left(\frac{\partial^2 w'}{\partial x^2} + \nu\frac{\partial^2 w'}{\partial y^2}\right)$$

$$M_y = -\frac{Et_1^3}{12(1-\nu^2)}\left(\frac{\partial^2 w}{\partial y^2} + \nu\frac{\partial^2 w}{\partial x^2}\right) \qquad M'_y = -\frac{Et_2^3}{12(1-\nu^2)}\left(\frac{\partial^2 w'}{\partial y^2} + \nu\frac{\partial^2 w'}{\partial x^2}\right)$$

$$M_{xy} = \frac{Et_1^3}{12(1+\nu)}\left(\frac{\partial^2 w}{\partial x\partial y}\right) \qquad M'_{xy} = \frac{Et_2^3}{12(1+\nu)}\left(\frac{\partial^2 w'}{\partial x\partial y}\right) \tag{43}$$

When the foregoing expressions for the forces and moments in the facings are substituted into the equilibrium equations of the facings, the equilibrium equations of the upper facing become

$$\frac{Et_1}{1-\nu^2}\left[\frac{\partial^2 u}{\partial x^2} + \left(\frac{1-\nu}{2}\right)\frac{\partial^2 u}{\partial y^2} + \left(\frac{1+\nu}{2}\right)\frac{\partial^2 v}{\partial x\partial y}\right] = -\tau_{xz} \tag{44}$$

$$\frac{Et_1}{1-\nu^2}\left[\frac{\partial^2 v}{\partial y^2} + \left(\frac{1-\nu}{2}\right)\frac{\partial^2 v}{\partial x^2} + \left(\frac{1+\nu}{2}\right)\frac{\partial^2 u}{\partial x \partial y}\right] = -\tau_{yz} \tag{45}$$

and

$$\frac{Et_1^3}{12(1-\nu^2)}(\nabla^4 w) = q + (\sigma_z)_z = -\frac{c}{2} + \frac{t_1}{2}\left(\frac{\partial \tau_{xz}}{\partial x} + \frac{\partial \tau_{yz}}{\partial y}\right) \tag{46}$$

and the equilibrium equations of the lower facing become

$$\frac{Et_2}{1-\nu^2}\left[\frac{\partial^2 u'}{\partial x^2} + \left(\frac{1-\nu}{2}\right)\frac{\partial^2 u'}{\partial y^2} + \left(\frac{1+\nu}{2}\right)\frac{\partial^2 v'}{\partial x \partial y}\right] = \tau_{xz} \tag{47}$$

$$\frac{Et_2}{1-\nu^2}\left[\frac{\partial^2 v'}{\partial y^2} + \left(\frac{1-\nu}{2}\right)\frac{\partial^2 v'}{\partial x^2} + \left(\frac{1+\nu}{2}\right)\frac{\partial^2 u'}{\partial x \partial y}\right] = \tau_{yz} \tag{48}$$

and

$$\frac{Et_2^3}{12(1-\nu^2)}(\nabla^4 w') = -(\sigma_z)_{z=\frac{c}{2}} + \frac{t_2}{2}\left(\frac{\partial \tau_{xz}}{\partial x} + \frac{\partial \tau_{yz}}{\partial y}\right) \tag{49}$$

Matching Displacements at the Boundaries Between the Core and the Facings

The equilibrium equations of the facings, equations (44) through (49), may be expressed in terms of the core displacements by equating the interface displacements of the facings to the corresponding interface displacements of the core and then expressing the middle surface displacements of the facings in terms of the interface displacements. In so doing, it is assumed that $\underline{w}$ and $\underline{w'}$ are constant through the facing thicknesses and that $\underline{u}$, $\underline{u'}$, $\underline{v}$, and $\underline{v'}$ vary linearly through the thicknesses. Thus,

$$u = (u_c)_{z=-\frac{c}{2}} + \frac{t_1}{2}\left(\frac{\partial w_c}{\partial x}\right)_{z=-\frac{c}{2}} \qquad u' = (u_c)_{z=\frac{c}{2}} - \frac{t_2}{2}\left(\frac{\partial w_c}{\partial x}\right)_{z=\frac{c}{2}}$$

$$v = (v_c)_{z=-\frac{c}{2}} + \frac{t_1}{2}\left(\frac{\partial w_c}{\partial y}\right)_{z=-\frac{c}{2}} \qquad v' = (v_c)_{z=\frac{c}{2}} - \frac{t_2}{2}\left(\frac{\partial w_c}{\partial y}\right)_{z=\frac{c}{2}} \tag{50}$$

$$w = (w_c)_{z=-\frac{c}{2}} \qquad w' = (w_c)_{z=\frac{c}{2}}$$

When the above expressions for the middle surface displacements of the facings are substituted in equations (44) through (49), the result is

$$\frac{Et_1}{1-\nu^2}\left[\frac{\partial^2 u_c}{\partial x^2} + \left(\frac{1-\nu}{2}\right)\frac{\partial^2 u_c}{\partial y^2} + \left(\frac{1+\nu}{2}\right)\frac{\partial^2 v_c}{\partial x \partial y} + \frac{t_1}{2}\frac{\partial}{\partial x}(\nabla^2 w_c)\right]_{z=-\frac{c}{2}} = -\tau_{xz} \tag{51}$$

$$\frac{Et_1}{1-\nu^2}\left[\frac{\partial^2 v_c}{\partial y^2} + \left(\frac{1-\nu}{2}\right)\frac{\partial^2 v_c}{\partial x^2} + \left(\frac{1+\nu}{2}\right)\frac{\partial^2 u_c}{\partial x \partial y} + \frac{t_1}{2}\frac{\partial}{\partial y}(\nabla^2 w_c)\right]_{z=-\frac{c}{2}} = -\tau_{yz} \tag{52}$$

$$\frac{Et_1^3}{12(1-\nu^2)} (\nabla^4 w_c)_{z=-\frac{c}{2}} = q + (\sigma_z)_{z=-\frac{c}{2}} + \frac{t_1}{2}\left(\frac{\partial \tau_{xz}}{\partial x} + \frac{\partial \tau_{yz}}{\partial y}\right) \tag{53}$$

$$\frac{Et_2}{1-\nu^2}\left[\frac{\partial^2 u_c}{\partial x^2} + \left(\frac{1-\nu}{2}\right)\frac{\partial^2 u_c}{\partial y^2} + \left(\frac{1+\nu}{2}\right)\frac{\partial^2 v_c}{\partial x \partial y} - \frac{t_2}{2}\frac{\partial}{\partial x}(\nabla^2 w_c)\right]_{z=\frac{c}{2}} = \tau_{xz} \tag{54}$$

$$\frac{Et_2}{1-\nu^2}\left[\frac{\partial^2 v_c}{\partial y^2} + \left(\frac{1-\nu}{2}\right)\frac{\partial^2 v_c}{\partial x^2} + \left(\frac{1+\nu}{2}\right)\frac{\partial^2 u_c}{\partial x \partial y} - \frac{t_2}{2}\frac{\partial}{\partial y}(\nabla^2 w_c)\right]_{z=\frac{c}{2}} = \tau_{yz} \tag{55}$$

and

$$\frac{Et_2^3}{12(1-\nu^2)} (\nabla^4 w_c)_{z=\frac{c}{2}} = -(\sigma_z)_{z=\frac{c}{2}} + \frac{t_2}{2}\left(\frac{\partial \tau_{xz}}{\partial x} + \frac{\partial \tau_{yz}}{\partial y}\right) \tag{56}$$

If the expressions for the core displacements and stresses given by equations (24) through (29) are substituted in equations (51) through (56), there results a system of six simultaneous equations from which, in conjunction with equation (27), the constants $\underline{A_{mn}}$, $\underline{B_{mn}}$,

C_{mn}, F_{mn}, H_{mn}, K_{mn}, and L_{mn} may be evaluated in terms of the intensity of lateral loading, q. In making this substitution, q in equation (53) is replaced by its double Fourier sine series expansion, that is,

$$q = \frac{16\,q}{\pi^2} \sum_{m=1}^{\infty} \sum_{n=1}^{\infty} \frac{1}{mn} \sin\frac{m\pi x}{a} \sin\frac{n\pi y}{b} \qquad m \text{ and } n \text{ are odd}$$

As a result of the above representation of q, the integers m and n are restricted to odd values throughout the remainder of the report. The six simultaneous equations are:

$$\frac{m\pi c}{a}(m^2 + n^2\rho^2)\left[-A_{mn}\left(\frac{1}{6}+\frac{t_1}{2c}\right) + B_{mn}\left(\frac{1}{4}+\frac{t_1}{2c}\right) - C_{mn}\left(\frac{1}{2}+\frac{t_1}{2c}\right)\right] + \left[m^2 + \left(\frac{1-\nu}{2}\right)n^2\rho^2\right]\left(\frac{F_{mn}}{2} - H_{mn}\right) + \left(\frac{1-\nu}{2}\right) mn\rho\left(\frac{K_{mn}}{2} - L_{mn}\right) = -\frac{G_{xz}a^2(1-\nu^2)}{\pi^2 E t_1 c} F_{mn} \tag{57}$$

$$\frac{n\rho\pi c}{a}(m^2 + n^2\rho^2)\left[-A_{mn}\left(\frac{1}{6}+\frac{t_1}{2c}\right) + B_{mn}\left(\frac{1}{4}+\frac{t_1}{2c}\right) - C_{mn}\left(\frac{1}{2}+\frac{t_1}{2c}\right)\right] + \left[\left(\frac{1-\nu}{2}\right)m^2 + n^2\rho^2\right]\left(\frac{K_{mn}}{2} - L_{mn}\right) + \left(\frac{1+\nu}{2}\right) mn\rho\left(\frac{F_{mn}}{2} - H_{mn}\right) = -\frac{G_{yz}a^2(1-\nu^2)}{\pi^2 E t_1 c} K_{mn} \tag{58}$$

$$(m^2 + n^2 \rho^2)^2 (A_{mn} - B_{mn} + C_{mn}) - \frac{12 E_c a^4 (1-\nu^2)}{\pi^4 E t_1^3 c} (-4 A_{mn} + 2 B_{mn})$$

$$+ \frac{6 G_{xz} a^3 (1-\nu^2)}{\pi^3 E t_1^2 c} m F_{mn} + \frac{6 G_{yz} a^3 (1-\nu^2)}{\pi^3 E t_1^2 c} n\rho K_{mn} = \frac{192 qa^4 (1-\nu^2)}{\pi^6 E t_1^3 mn} \qquad (59)$$

$$\left(\frac{m\pi c}{a}\right) (m^2 + n^2 \rho^2) \left[A_{mn} \left(\frac{1}{6} + \frac{t_2}{2c}\right) + B_{mn} \left(\frac{1}{4} + \frac{t_2}{2c}\right) + C_{mn} \left(\frac{1}{2} + \frac{t_2}{2c}\right)\right] - \left[m^2 + \left(\frac{1-\nu}{2}\right) n^2 \rho^2\right] \left(\frac{F_{mn}}{2}\right.$$

$$\left. + H_{mn}\right) - \left(\frac{1+\nu}{2}\right) mn\rho \left(\frac{K_{mn}}{2} + L_{mn}\right) = \frac{G_{xz} a^2 (1-\nu^2)}{\pi^2 E t_2 c} F_{mn} \qquad (60)$$

$$\frac{n\rho\pi c}{a} (m^2 + n^2 \rho^2) \left[A_{mn} \left(\frac{1}{6} + \frac{t_2}{2c}\right) + B_{mn} \left(\frac{1}{4} + \frac{t_2}{2c}\right) + C_{mn} \left(\frac{1}{2} + \frac{t_2}{2c}\right)\right] - \left[\left(\frac{1-\nu}{2}\right) m^2 + n^2 \rho^2\right] \left(\frac{K_{mn}}{2}\right.$$

$$\left. + L_{mn}\right) - \left(\frac{1+\nu}{2}\right) mn\rho \left(\frac{F_{mn}}{2} + H_{mn}\right) = \frac{G_{yz} a^2 (1-\nu^2)}{\pi^2 E t_2 c} K_{mn} \qquad (61)$$

$$(m^2 + n^2 \rho^2)^2 (A_{mn} + B_{mn} + C_{mn}) + \frac{12 E_c a^4 (1-\nu^2)}{\pi^4 E t_2^3 c} (4 A_{mn}$$

$$+ 2 B_{mn}) + \frac{6 G_{xz} a^3 (1-\nu^2)}{\pi^3 E t_2^2 c} m F_{mn}$$

$$+ \frac{6 G_{yz} a^3 (1-\nu^2)}{\pi^3 E t_2^2 c} np K_{mn} = 0 \tag{62}$$

A literal solution for the constants A_{mn}, B_{mn}, C_{mn}, F_{mn}, K_{mn}, H_{mn}, and L_{mn} obtained on the basis of equation (27) and equations (57) through (62) is very lengthy and contains too many parameters to be of practical value for design purposes. These equations can be simplified enough to render a practical solution possible if certain additional assumptions are made. The amount of error introduced by making further simplifying assumptions can be determined in any particular case by obtaining a numerical solution based on the foregoing general system of equations.

To obtain the aforementioned simplification, it is assumed that the flexural stiffnesses of the individual facings are negligible and that the modulus of elasticity of the core in the z direction (E_c) is infinite. This additional assumption in regard to the core results in a core analysis that is identical with that obtained on the basis of the so-called "tilting" method commonly used in sandwich analysis. The neglect of the flexural stiffnesses of the facings is known to be justifiable for most practical sandwich constructions. As a result of these assumptions, the system of equations, equations (27) and (57) through (62), reduces to the following:

$$G_{xz} m F_{mn} + G_{yz} np K_{mn} = \frac{8a}{\pi c} E_c A_{mn} \tag{27'}$$

$$\frac{m\pi c}{a}(m^2 + n^2\rho^2)\left[-\frac{C_{mn}}{2}\left(1 + \frac{t_1}{c}\right)\right] + \left[m^2 + \left(\frac{1-\nu}{2}\right) n^2\rho^2\right]\left(\frac{F_{mn}}{2} - H_{mn}\right)$$

$$+ \left(\frac{1+\nu}{2}\right) mn\rho\left(\frac{K_{mn}}{2} - L_{mn}\right) = -\frac{G_{xz}\, a^2 (1-\nu^2)}{\pi^2 E t_1\, c} F_{mn} \qquad (57')$$

$$\frac{n\rho\pi c}{a}(m^2 + n^2\rho^2)\left[-\frac{C_{mn}}{2}\left(1 + \frac{t_1}{c}\right)\right] + \left[\left(\frac{1-\nu}{2}\right) m^2 + n^2\rho^2\right]\left(\frac{K_{mn}}{2} - L_{mn}\right)$$

$$+ \left(\frac{1+\nu}{2}\right) mn\rho\left(\frac{F_{mn}}{2} - H_{mn}\right) = -\frac{G_{yz}\, a^2 (1-\nu^2)}{\pi^2 E t_1\, c} K_{mn} \qquad (58')$$

$$\frac{2 E_c\, a}{\pi t_1}(4 A_{mn} - 2 B_{mn}) + G_{xz}\, m F_{mn} + G_{yz}\, n\rho K_{mn} = \frac{32\, qac}{\pi^3 t_1\, mn} \qquad (59')$$

$$\frac{m\pi c}{a}(m^2 + n^2\rho^2)\left[\frac{C_{mn}}{2}\left(1 + \frac{t_2}{c}\right)\right] - \left[m^2 + \left(\frac{1-\nu}{2}\right) n^2\rho^2\right]\left(\frac{F_{mn}}{2} + H_{mn}\right)$$

$$- \left(\frac{1+\nu}{2}\right) mn\rho\left(\frac{K_{mn}}{2} + L_{mn}\right) = \frac{G_{xz}\, a^2 (1-\nu^2)}{\pi^2 E t_2\, c} F_{mn} \qquad (60')$$

$$\frac{n\rho\pi c}{a}(m^2 + n^2\rho^2)\left[\frac{C_{mn}}{2}\left(1 + \frac{t_2}{c}\right)\right] - \left[\left(\frac{1-\nu}{2}\right) m^2 + n^2\rho^2\right]\left(\frac{K_{mn}}{2} + L_{mn}\right)$$

$$- \left(\frac{1+\nu}{2}\right) mn\rho\left(\frac{F_{mn}}{2} + H_{mn}\right) = \frac{G_{yz}\, a^2 (1-\nu^2)}{\pi^2 E t_2\, c} K_{mn} \qquad (61')$$

$$\frac{2 E_c\, a}{\pi t_2}(4 A_{mn} + 2 B_{mn}) + G_{xz}\, m F_{mn} + G_{yz}\, n\rho K_{mn} = 0 \qquad (62')$$

where, in equations (59') and (62'), $\underline{E_c = \infty}$ and $\underline{A_{mn} = B_{mn} = 0}$ but $\underline{E_c A_{mn}}$ and $\underline{E_c B_{mn}}$ are finite quantities.

From equations (27'), (59'), and (62')

$$E_c A_{mn} = \frac{2\,qc}{\pi^2\, mn \left(1 + \frac{t_1 + t_2}{2\,c}\right)} \tag{63}$$

$$E_c B_{mn} = -\frac{4\,qc}{\pi^2\, mn} \left(\frac{1 + \frac{t_2}{c}}{1 + \frac{t_1 + t_2}{2\,c}}\right) \tag{64}$$

and, from equations (27'), (57'), (58'), (60'), and (61')

$$C_{mn} = k \left\{ \frac{1 + \left[m^2 + \left(\frac{1-\nu}{2}\right) n^2 \rho^2\right] S_x + \left[\frac{1-\nu}{2}\, m^2 + n^2 \rho^2\right] S_y + \left(\frac{1-\nu}{2}\right) \left(m^2 + n^2 \rho^2\right)^2 S_x S_y}{mn \left(m^2 + n^2 \rho^2\right)^2 \left[1 + \left(\frac{1-\nu}{2}\right) \left(m^2 S_y + n^2 \rho^2 S_x\right)\right]} \right\} \tag{65}$$

$$F_{mn} = \frac{16\,qa}{\pi^3\, G_{xz} \left(1 + \frac{t_1 + t_2}{2\,c}\right)} \left\{ \frac{1 + \left(\frac{1-\nu}{2}\right) \left(m^2 + n^2 \rho^2\right) S_y}{n \left(m^2 + n^2 \rho^2\right) \left[1 + \left(\frac{1-\nu}{2}\right) \left(m^2 S_y + n^2 \rho^2 S_x\right)\right]} \right\} \tag{66}$$

$$K_{mn} = \frac{16\, qa\rho}{\pi^3\, G_{yz}\left(1 + \frac{t_1 + t_2}{2\,c}\right)} \left\{ \frac{1 + \left(\frac{1-\nu}{2}\right)\left(m^2 + n^2\rho^2\right) S_x}{m\left(m^2 + n^2\rho^2\right)\left[1 + \left(\frac{1-\nu}{2}\right)\left(m^2 S_y + n^2\rho^2 S_x\right)\right]} \right\} \tag{67}$$

$$H_{mn} = -\frac{1}{(1-\nu)\, S_x}\left(\frac{t_1 - t_2}{t_1 + t_2}\right)\frac{F_{mn}}{m^2 + n^2\rho^2} - \frac{m\pi}{a}\left(\frac{t_1 - t_2}{4}\right) C_{mn} + \left(\frac{1+\nu}{1-\nu}\right)\left(\frac{k\pi}{2a}\right)\left(\frac{t_1 - t_2}{t_1 + t_2}\right)\left(c + \frac{t_1 + t_2}{2}\right)\frac{1}{n\left(m^2 + n^2\rho^2\right)^2} \tag{68}$$

$$L_{mn} = -\frac{1}{(1-\nu)\, S_y}\left(\frac{t_1 - t_2}{t_1 + t_2}\right)\frac{K_{mn}}{m^2 + n^2\rho^2} - \frac{n\rho\pi}{a}\left(\frac{t_1 - t_2}{4}\right) C_{mn} + \left(\frac{1+\nu}{1-\nu}\right)\left(\frac{\pi k\rho}{2\,a}\right)\left(\frac{t_1 - t_2}{t_1 + t_2}\right)\left(c + \frac{t_1 + t_2}{2}\right)\frac{1}{m\left(m^2 + n^2\rho^2\right)^2} \tag{69}$$

where

$$k = \frac{16\, qa^4\, (1-\nu^2)}{\pi^6\, EI}$$

$$I = \left(\frac{t_1\, t_2}{t_1 + t_2}\right)\left(c + \frac{t_1 + t_2}{2}\right)^2$$

$$S_x = \frac{\pi^2\, E\, c\, t_1\, t_2}{G_{xz}\, a^2\, (1-\nu^2)\, (t_1 + t_2)}$$

$$S_y = \frac{\pi^2\, E\, c\, t_1\, t_2}{G_{yz}\, a^2\, (1-\nu^2)\, (t_1 + t_2)}$$

Lateral Deflection

Since, under the assumptions used in obtaining equations (63) through (69), A_{mn} and B_{mn} are equal to zero, the expression for the deflection given by equation (26) becomes

$$w_c = w = w' = \sum_{m=1}^{\infty} \sum_{n=1}^{\infty} C_{mn} \sin \frac{m\pi x}{a} \sin \frac{n\pi y}{b} \qquad (70)$$

m and n are odd

The maximum deflection occurs at the center of the plate, and, with the substitution of the expression for C_{mn} given by equation (65), it may be expressed as

$$w_{max} = k \sum_{m=1}^{\infty} \sum_{n=1}^{\infty} (-1)^{\frac{m+n}{2} - 1} \left\{ \frac{1 + \left[m^2 + \left(\frac{1-\nu}{2}\right) n^2 \rho^2\right] S_x}{mn \left(m^2 + n^2 \rho^2\right)^2 \left[1 + \left[\left(\frac{1-\nu}{2}\right) m^2 + n^2 \rho^2\right] S_y + \left(\frac{1-\nu}{2}\right) \left(m^2 + n^2 \rho^2\right)^2 S_x S_y \right.}{\left. + \left(\frac{1-\nu}{2}\right) \left(m^2 S_y + n^2 \rho^2 S_x\right)\right]} \right\} \tag{71}$$

$\underline{m}$ and $\underline{n}$ are odd

If the moduli of rigidity of the core are set equal to infinity, $\underline{S_x}$ and $\underline{S_y}$ are zero, and the above solution reduces to the classical Navier solution for the deflection of a homogeneous plate provided that the moment of inertia is taken to be that of the spaced facings of the sandwich plate.

Core Stresses

The expressions for the core stresses are obtained by substituting the values of the constants given by equations (63), (64), (66), and (67) into equations (28), (29), and (30). These expressions are:

$$\sigma_z = - \frac{8 q \left(c + t_2 - 2 z\right)}{\pi^2 \left(c + \frac{t_1 + t_2}{2}\right)} \sum_{m=1}^{\infty} \sum_{n=1}^{\infty} \frac{1}{mn} \sin \frac{m\pi x}{a} \sin \frac{n\pi y}{b} \tag{72}$$

$\underline{m}$ and $\underline{n}$ are odd

$$\tau_{xz} = \frac{16\,qa}{\pi^3 \left(c + \frac{t_1 + t_2}{2}\right)} \sum_{m=1}^{\infty} \sum_{n=1}^{\infty} \left\{ \frac{1 + \left(\frac{1-\nu}{2}\right)(m^2 + n^2\rho^2) S_y}{n\,(m^2 + n^2\rho^2)\left[1 + \left(\frac{1-\nu}{2}\right)(m^2 S_y + n^2\rho^2 S_x)\right]} \right\} \cos\frac{m\pi x}{a} \sin\frac{n\pi y}{b} \qquad \underline{m} \text{ and } \underline{n} \text{ are odd} \tag{73}$$

$$\tau_{yz} = \frac{16\,qa\rho}{\pi^3 \left(c + \frac{t_1 + t_2}{2}\right)} \sum_{m=1}^{\infty} \sum_{n=1}^{\infty} \left\{ \frac{1 + \left(\frac{1-\nu}{2}\right)(m^2 + n^2\rho^2) S_x}{m\,(m^2 + n^2\rho^2)\left[1 + \left(\frac{1-\nu}{2}\right)(m^2 S_y + n^2\rho^2 S_x)\right]} \right\} \sin\frac{m\pi x}{a} \cos\frac{n\pi y}{b} \qquad \underline{m} \text{ and } \underline{n} \text{ are odd} \tag{74}$$

Since the series in equation (72) sums to $\underline{\frac{\pi^2}{16}}$,

$$\sigma_z = -\frac{q}{2}\left(\frac{c + t_2 - 2z}{c + \frac{t_1 + t_2}{2}}\right) \tag{72'}$$

It is seen that $(\sigma_z)_{max}$ occurs at $z = -\frac{c}{2}$ and is slightly smaller than q in absolute value. This slight difference is due to the fact that the facings are transmitting a small amount of transverse shear.

The maximum value of τ_{xz} occurs at the center of the sides $x = 0$ and $x = a$, and the maximum value of τ_{yz} occurs at the center of the sides $y = 0$ and $y = b$. The expressions for these maximum shear stresses are:

$$(\tau_{xz})_{max} = \frac{16\,qa}{\pi^3 \left(c + \frac{t_1 + t_2}{2}\right)} \sum_{m=1}^{\infty} \sum_{n=1}^{\infty} (-1)^{\frac{n-1}{2}} \left\{ \frac{1 + \left(\frac{1-\nu}{2}\right)(m^2 + n^2\rho^2)\, S_y}{n\,(m^2 + n^2\rho^2)\left[1 + \left(\frac{1-\nu}{2}\right)(m^2 + n^2\rho^2)\, S_x\right]} \right\} \qquad \underline{m} \text{ and } \underline{n} \text{ are odd} \tag{75}$$

and

$$(\tau_{yz})_{max} = \frac{16\,qa}{\pi^3 \left(c + \frac{t_1 + t_2}{2}\right)} \sum_{m=1}^{\infty} \sum_{n=1}^{\infty} (-1)^{\frac{m-1}{2}} \left\{ \frac{\rho\left[1 + \left(\frac{1-\nu}{2}\right)(m^2 + n^2\rho^2)\, S_x\right]}{m\,(m^2 + n^2\rho^2)\left[1 + \left(\frac{1-\nu}{2}\right)(m^2 + n^2\rho^2)\, S_x\right]} \right\} \qquad \underline{m} \text{ and } \underline{n} \text{ are odd} \tag{76}$$

Facing Stresses

The expressions for the forces and moments per unit length of the facings are given by equations (43). Under the present assumption that the flexural stiffnesses of the individual facings are zero, the six moment expressions are zero. The forces per unit length of the facings may be evaluated by first expressing them in terms of the core displacements by means of equations (50) and then substituting in the values of the core displacements given by equations (24), (25), and (26), remembering that $\underline{A_{mn}}$ and $\underline{B_{mn}}$ are zero. The results of these substitutions may be expressed as

$$N_x = \frac{Et_1}{1-\nu^2}(\epsilon_x + \nu\epsilon_y) \qquad N_x' = \frac{Et_2}{1-\nu^2}(\epsilon_x' + \nu\epsilon_y')$$

$$N_y = \frac{Et_1}{1-\nu^2}(\nu\epsilon_x + \epsilon_y) \qquad N_y' = \frac{Et_2}{1-\nu^2}(\nu\epsilon_x' + \epsilon_y') \qquad (77)$$

$$N_{xy} = \frac{Et_1}{2(1+\nu)}(\gamma_{xy}) \qquad N_{xy}' = \frac{Et_2}{2(1+\nu)}(\gamma_{xy}')$$

where

$$\epsilon_x = \sum_{m=1}^{\infty} \sum_{n=1}^{\infty} \left[\left(-\frac{m^2 \pi^2}{a^2}\right) \left(\frac{c + t_1}{2}\right) C_{mn} + \frac{m\pi}{2a} F_{mn} - \frac{m\pi}{a} H_{mn} \right] \sin \frac{m\pi x}{a} \sin \frac{n\pi y}{b}$$

$$\epsilon_y = \sum_{m=1}^{\infty} \sum_{n=1}^{\infty} \left[\left(-\frac{n^2 \rho^2 \pi^2}{a^2}\right) \left(\frac{c + t_1}{2}\right) C_{mn} + \frac{m\pi}{2a} K_{mn} - \frac{m\pi}{a} L_{mn} \right] \sin \frac{m\pi x}{a} \sin \frac{n\pi y}{b}$$

$$\epsilon'_x = \sum_{m=1}^{\infty} \sum_{n=1}^{\infty} \left[\left(\frac{m^2 \pi^2}{a^2}\right) \left(\frac{c + t_2}{2}\right) C_{mn} - \frac{m\pi}{2a} F_{mn} - \frac{m\pi}{a} H_{mn} \right] \sin \frac{m\pi x}{a} \sin \frac{n\pi y}{b}$$

$$\epsilon'_y = \sum_{m=1}^{\infty} \sum_{n=1}^{\infty} \left[\left(\frac{n^2 \rho^2 \pi^2}{a^2}\right) \left(\frac{c + t_2}{2}\right) C_{mn} - \frac{m\pi}{2a} K_{mn} - \frac{m\pi}{a} L_{mn} \right] \sin \frac{m\pi x}{a} \sin \frac{n\pi y}{b}$$

$$\gamma_{xy} = \sum_{m=1}^{\infty} \sum_{n=1}^{\infty} \left[\frac{mn\rho\pi^2}{a^2} (c + t_1) C_{mn} - \frac{n\rho\pi}{a} \left(\frac{F_{mn}}{2} - H_{mn}\right) - \frac{m\pi}{a} \left(\frac{K_{mn}}{2} - L_{mn}\right) \right] \cos \frac{m\pi x}{a} \cos \frac{n\pi y}{b}$$

In above equations m and n are odd

and

$$\gamma'_{xy} = \sum_{m=1}^{\infty} \sum_{n=1}^{\infty} \left[- \frac{mn\rho\pi^2}{a^2} (c + t_2) C_{mn} + \frac{n\rho\pi}{a} \left(\frac{F_{mn}}{2} + H_{mn}\right) + \frac{m\pi}{a} \left(\frac{K_{mn}}{2} + L_{mn}\right) \right] \cos \frac{m\pi x}{a} \cos \frac{n\pi y}{b} \qquad \underline{m} \text{ and } \underline{n} \text{ are odd}$$

After the expressions for the constants $\underline{C_{mn}}$, $\underline{F_{mn}}$, $\underline{K_{mn}}$, $\underline{H_{mn}}$, and $\underline{L_{mn}}$ given by equations (65) through (69) are substituted into the foregoing strain equations, the results are:

$$\epsilon_x = - k \frac{\pi^2}{a^2} \left(\frac{t_2}{t_1 + t_2}\right) \left(c + \frac{t_1 + t_2}{2}\right) \sum_{m=1}^{\infty} \sum_{n=1}^{\infty} \psi_{mn} \sin \frac{m\pi x}{a} \sin \frac{n\pi y}{b} \qquad \underline{m} \text{ and } \underline{n} \text{ are odd}$$

$$\epsilon_y = - k \frac{\pi^2 \rho^2}{a^2} \left(\frac{t_2}{t_1 + t_2}\right) \left(c + \frac{t_1 + t_2}{2}\right) \sum_{m=1}^{\infty} \sum_{n=1}^{\infty} \Omega_{mn} \sin \frac{m\pi x}{a} \sin \frac{n\pi y}{b} \qquad \underline{m} \text{ and } \underline{n} \text{ are odd}$$

$$\epsilon'_x = k \frac{\pi^2}{a^2} \left(\frac{t_1}{t_1 + t_2}\right) \left(c + \frac{t_1 + t_2}{2}\right) \sum_{m=1}^{\infty} \sum_{n=1}^{\infty} \psi_{mn} \sin \frac{m\pi x}{a} \sin \frac{n\pi y}{b} \qquad \underline{m} \text{ and } \underline{n} \text{ are odd}$$

$$\epsilon_y' = k \frac{\pi^2 \rho^2}{a^2} \left(\frac{t_1}{t_1 + t_2}\right) \left(c + \frac{t_1 + t_2}{2}\right) \sum_{m=1}^{\infty} \sum_{n=1}^{\infty} \Omega_{mn} \sin \frac{m\pi x}{a} \sin \frac{n\pi y}{b} \qquad \underline{m} \text{ and } \underline{n} \text{ are odd}$$

$$\gamma_{xy} = k \frac{\pi^2}{a^2} \rho \left(\frac{t_1}{t_1 + t_2}\right) \left(c + \frac{t_1 + t_2}{2}\right) \sum_{m=1}^{\infty} \sum_{n=1}^{\infty} \Phi_{mn} \cos \frac{m\pi x}{a} \cos \frac{n\pi y}{b} \qquad \underline{m} \text{ and } \underline{n} \text{ are odd}$$

$$\gamma_{xy}' = - k \frac{\pi^2}{a^2} \rho \left(\frac{t_2}{t_1 + t_2}\right) \left(c + \frac{t_1 + t_2}{2}\right) \sum_{m=1}^{\infty} \sum_{n=1}^{\infty} \Phi_{mn} \cos \frac{m\pi x}{a} \cos \frac{n\pi y}{b} \qquad \underline{m} \text{ and } \underline{n} \text{ are odd}$$

where

$$\psi_{mn} = \frac{m \left\{ 1 + \left[\left(\frac{1-\nu}{2}\right) m^2 + n^2 \rho^2 \right] S_y - \left(\frac{1+\nu}{2}\right) n^2 \rho^2 S_x \right\}}{n \left(m^2 + n^2 \rho^2\right)^2 \left[1 + \left(\frac{1-\nu}{2}\right) \left(m^2 S_y + n^2 \rho^2 S_x\right) \right]}$$

$$\Omega_{mn} = \frac{n\rho^2 \left\{ 1 + \left[m^2 + \left(\frac{1-\nu}{2}\right) n^2 \rho^2 \right] S_x - \left(\frac{1+\nu}{2}\right) m^2 S_y \right\}}{m \left(m^2 + n^2 \rho^2\right)^2 \left[1 + \left(\frac{1-\nu}{2}\right) \left(m^2 S_y + n^2 \rho^2 S_x\right) \right]}$$

and

$$\Phi_{mn} = \frac{2 + (m^2 - \nu n^2 \rho^2) S_x + (-\nu m^2 + n^2 \rho^2) S_y}{(m^2 + n^2 \rho^2)^2 \left[1 + (\frac{1-\nu}{2}) (m^2 S_y + n^2 \rho^2 S_x)\right]}$$

As would be expected, the absolute values of N_x and N_x', N_y and N_y', N_{xy} and N_{xy}' are equal, respectively, as shown by equations (77) and the subsequent expressions for the strains. The maximum values of N_x and N_y occur at the center of the plate, and these values may be obtained from the following:

$$(N_x)_{max} = \frac{Et_1}{1-\nu^2} (\epsilon_{x_{max}} + \nu \epsilon_{y_{max}}) \tag{78}$$

$$(N_y)_{max} = \frac{Et_1}{1-\nu^2} (\nu \epsilon_{x_{max}} + \epsilon_{y_{max}}) \tag{79}$$

where

$$\epsilon_{x_{max}} = -k \frac{\pi^2}{a^2} \left(\frac{t_2}{t_1 + t_2}\right) \left(c + \frac{t_1 + t_2}{2}\right) \sum_{m=1}^{\infty} \sum_{n=1}^{\infty} (-1)^{\frac{m+n}{2} - 1} \psi_{mn}$$

m and n are odd

$$\epsilon_{y_{max}} = -k \frac{\pi^2 \rho^2}{a^2} \left(\frac{t_2}{t_1 + t_2}\right) \left(c + \frac{t_1 + t_2}{2}\right) \sum_{m=1}^{\infty} \sum_{n=1}^{\infty} (-1)^{\frac{m+n}{2} - 1} \Omega_{mn}$$

m and n are odd

N_{xy} is zero at the center of the plate and reaches a maximum at the corners. No attempt was made to calculate values of N_{xy} since such values would be of little importance for design purposes.

Numerical Computations

Calculations were made for the maximum deflection, the maximum shear stresses in the core, and the maximum normal forces per unit length of the facings. For purposes of calculation, equations (71), (78), (79), (75), and (76) were expressed as follows:

Defl

$$(w)_{max} = k\, C_1 \tag{80}$$

$$(N_x)_{max} = k_1\, (C_2 + \nu C_3) \tag{81}$$

$$(N_y)_{max} = k_1\, (C_3 + \nu C_2) \tag{82}$$

$$(\tau_{xz})_{max} = k_2\, C_4 \tag{83}$$

and

$$(\tau_{yz})_{max} = k_2\, C_5 \tag{84}$$

where

$$k = \frac{16\, qa^4\, (1-\nu^2)}{\pi^6\, EI}$$

$$k_1 = -\left(\frac{\pi^2 k}{a^2}\right) \frac{E\, t_1\, t_2}{(1-\nu^2)\,(t_1 + t_2)} \left(c + \frac{t_1 + t_2}{2}\right) = -\frac{16\, qa^2}{\pi^4 \left(c + \frac{t_1 + t_2}{2}\right)}$$

and

$$k_2 = \frac{16\,qa}{\pi^3 \left(c + \frac{t_1 + t_2}{2}\right)}$$

The coefficients C_1 through C_5 represent the corresponding double infinite series in equations (71), (78), (79), (75), and (76). Since the series represented by C_1, C_2, and C_3 in equations (80), (81), and (82) are alternating in sign when summed over either the n's or the m's, the values of these coefficients can be obtained with sufficient accuracy by summing a finite number of terms and using Euler's transformation on the last few terms in cases where convergence is slow. In obtaining the values of C_1, C_2, and C_3 given in table 1, the first 21 terms of the double infinite series were used. The double infinite series that appear in the expressions for the core shear stresses, represented by C_4 and C_5, are more difficult to sum because C_4 alternates only when summed over the n's and C_5 alternates only when summed over the m's. The nonalternating part of these series was summed by the method suggested by Gumowski[3] and the resulting partial sums could then be summed using Euler's transformation. In all of the numerical work, the value of Poisson's ratio of the facings was taken as 0.3.

It is of interest to note that the values for $S_x = S_y = 0$ in table 1 represent the deflection, moment, and shear coefficients for a uniformly loaded homogeneous plate with a moment of inertia equal to that of the spaced facings of the sandwich plate. Thus, if the proper conversion factor is used in each case, these values may be shown to agree with those given by Timoshenko for the homogeneous plate problem.[4]

---

[3] Gumowski, Igor. Summation of Slowly Converging Series. Journal of Applied Physics Vol. 24, No. 8, p. 1068. 1953.

[4] Timoshenko, S. Theory of Plates and Shells. p. 133. New York. 1940.

Conclusions

A general solution for the deflections and stresses in a uniformly loaded, simply supported, rectangular sandwich plate is contained in this report. This solution, based on the assumptions outlined in the Introduction, consists of expressions for the deflections and stresses in the form of double Fourier series in which the coefficients must be obtained from equations (27) and (57) through (62).

In order to reduce the amount of numerical work necessary for the preparation of design curves, certain additional simplifying assumptions are made. On the basis of these additional assumptions the necessary Fourier coefficients may be expressed as shown in equations (63) through (69). The solution for the deflections and stresses is then represented by equations (70), (72'), (73), (74), and (77); and the expressions for the maximum deflection, the maximum shear stresses in the core, and the maximum forces per unit length in the facings are given by equations (71), (75), (76), (78), and (79). Numerical results based on equations (71), (75), (76), (78), and (79) are given in table 1, and design curves based on these values are shown in figures 5 through 16.

Table 1. --Stress and deflection coefficients for uniformly loaded sandwich plate

$$(w)_{max} = kC_1 \; ; \; (N_x)_{max} = k_1 (C_2 + \nu C_3) \; ; \; (N_y)_{max} = k_1 (C_3 + \nu C_2) \; ; \; (\tau_{xz})_{max} = k_2 C_4 \; ; \; (\tau_{yz})_{max} = k_2 C_5$$

$$\text{where: } k = \frac{16\, qa^4 (1-\nu^2)}{\pi^6 EI} \; ; \; k_1 = -\left(\frac{\pi^2 k}{a^2}\right)\left(\frac{E}{1-\nu^2}\right)\left(\frac{t_1 t_2}{t_1 + t_2}\right)\left(c + \frac{t_1 + t_2}{2}\right) ; \text{ and } k_2 = \frac{16\, qa}{\pi^3 \left(c + \frac{t_1 + t_2}{2}\right)}$$

ρ	S_y	$S_x = S_y$					$S_x = 0.4\, S_y$					$S_x = 2.5\, S_y$				
		C_1	C_2	C_3	C_4	C_5	C_1	C_2	C_3	C_4	C_5	C_1	C_2	C_3	C_4	C_5
0	0	0.782	0.761	0	0.969	0.719	0.782	0.761	0	0.969	0.719	0.782	0.761	0	0.969	0.719
0	.50	1.162	.761	0	.969	.719	.934	.761	0	.969	.671	1.735	.761	0	.969	.798
0	1.00	1.540	.761	0	.969	.719	1.086	.761	0	.969	.626	2.687	.761	0	.969	.858
0	1.50	1.921	.761	0	.969	.719	1.238	.761	0	.969	.589	3.634	.761	0	.969	.900
0	2.00	2.302	.761	0	.969	.719	1.390	.761	0	.969	.559	4.586	.761	0	.969	.926
.25	0	.770	.749	.0088	.966	.719	.770	.749	.0088	.966	.719	.770	.749	.0088	.966	.719
.25	.50	1.148	.749	.0088	.966	.719	.924	.752	.0060	.967	.671	1.710	.741	.0168	.962	.798
.25	1.00	1.526	.749	.0088	.966	.719	1.079	.754	.0042	.967	.626	2.645	.733	.0250	.959	.858
.25	1.50	1.905	.749	.0088	.966	.719	1.232	.755	.0028	.968	.589	3.576	.726	.0320	.957	.899
.25	2.00	2.288	.749	.0088	.966	.719	1.386	.756	.0015	.968	.559	4.504	.719	.0392	.955	.925
.50	0	.609	.587	.106	.902	.717	.609	.587	.1056	.902	.717	.609	.587	.106	.902	.717
.50	.50	.951	.587	.106	.902	.717	.774	.617	.0756	.909	.669	1.370	.519	.174	.873	.796
.50	1.00	1.299	.587	.106	.902	.717	.940	.636	.0571	.914	.625	2.118	.462	.231	.856	.854
.50	1.50	1.646	.587	.106	.902	.717	1.099	.652	.0412	.919	.588	2.849	.424	.269	.844	.893
.50	2.00	1.996	.587	.106	.902	.717	1.258	.665	.0273	.923	.559	3.557	.396	.297	.836	.917
.75	0	.398	.377	.193	.777	.694	.398	.377	.193	.777	.694	.398	.377	.193	.777	.694
.75	.50	.681	.377	.193	.777	.694	.565	.429	.142	.796	.656	.926	.260	.311	.726	.758
.75	1.00	.969	.377	.193	.777	.694	.725	.462	.109	.811	.612	1.444	.203	.368	.694	.807
.75	1.50	1.255	.377	.193	.777	.694	.880	.489	.082	.822	.585	1.952	.167	.404	.675	.842
.75	2.00	1.543	.377	.193	.777	.694	1.032	.509	.061	.830	.558	2.452	.147	.424	.662	.860
1.00	0	.244	.224	.224	.654	.654	.244	.224	.224	.654	.654	.244	.224	.224	.654	.654
1.00	.50	.468	.224	.224	.654	.654	.395	.279	.169	.685	.622	.608	.117	.332	.586	.706
1.00	1.00	.692	.224	.224	.654	.654	.539	.317	.131	.708	.592	.946	.066	.382	.545	.750
1.00	1.50	.917	.224	.224	.654	.654	.677	.345	.104	.728	.568	1.274	.037	.411	.524	.772
1.00	2.00	1.141	.224	.224	.654	.654	.813	.366	.082	.739	.557	1.598	.018	.430	.511	.781

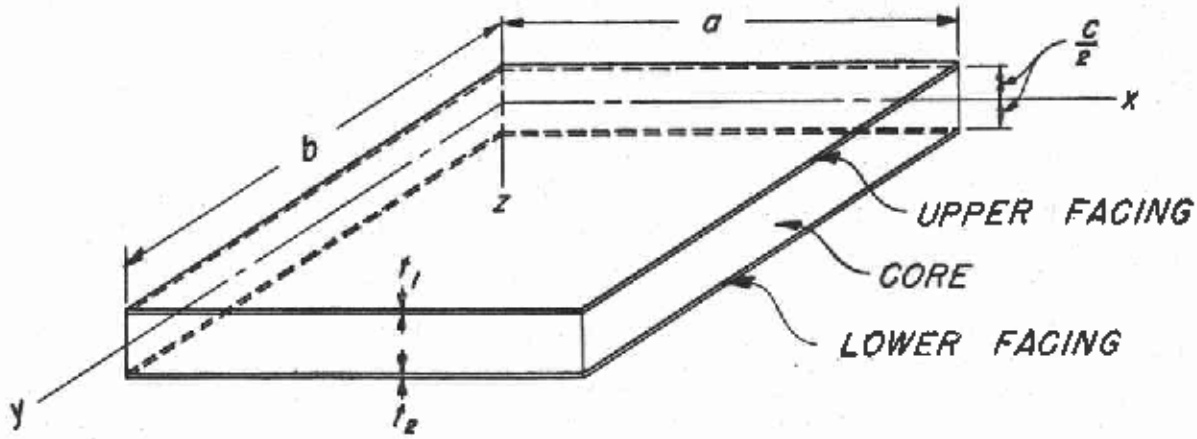

Figure 1. --Isometric drawing of a sandwich plate.

M 107 199

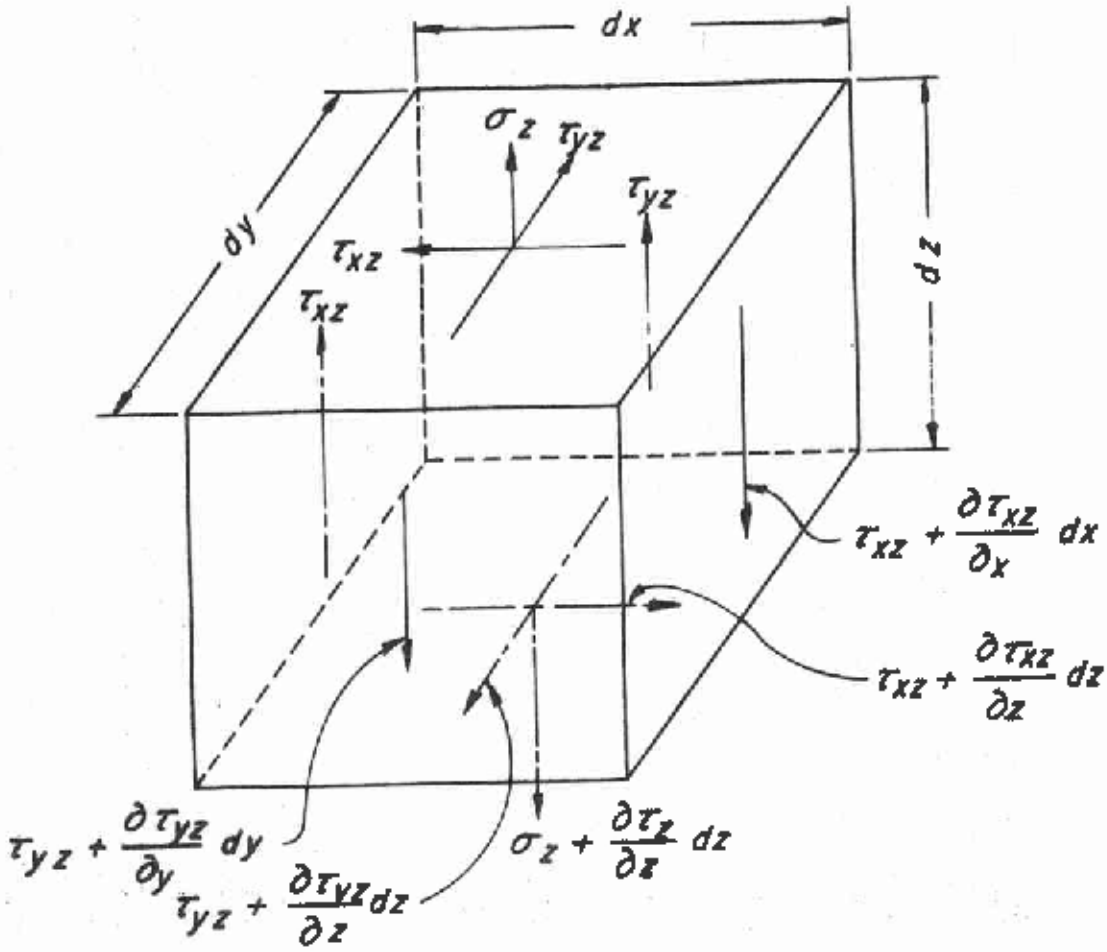

Figure 2. --Differential element of the core.

N 107 800

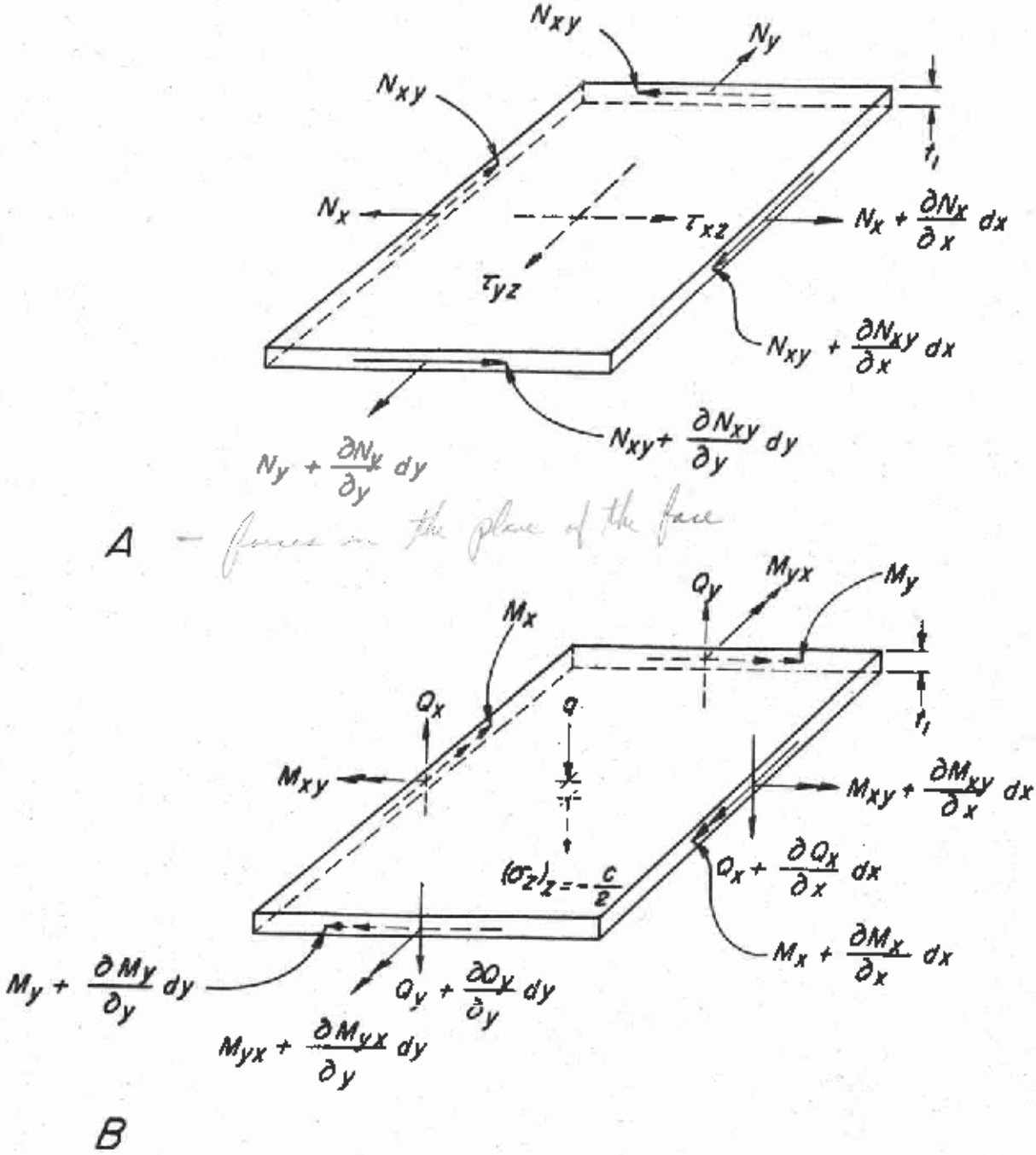

Figure 3. --Differential element of upper facing.

N 107 201

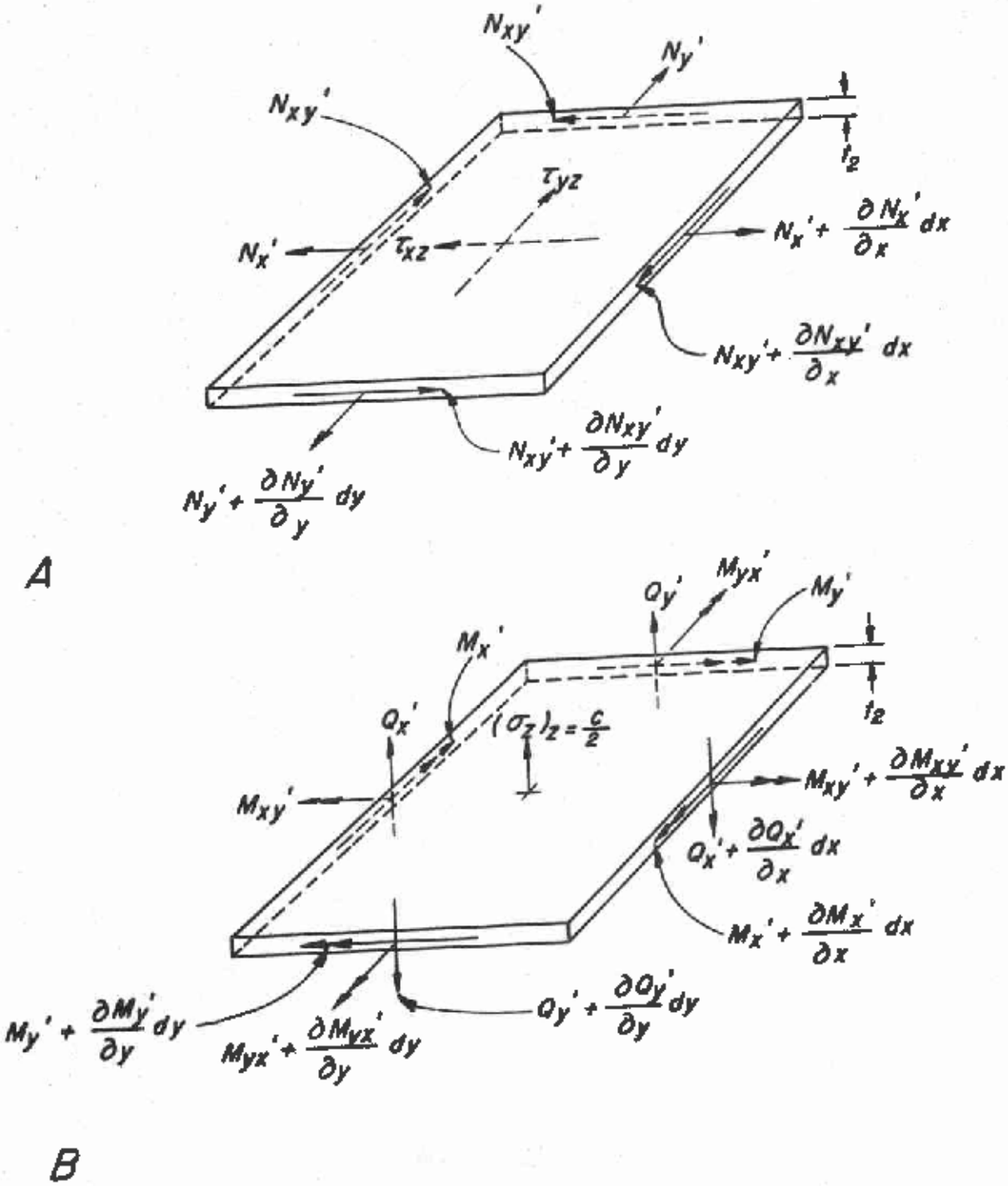

Figure 4. --Differential element of lower facing.

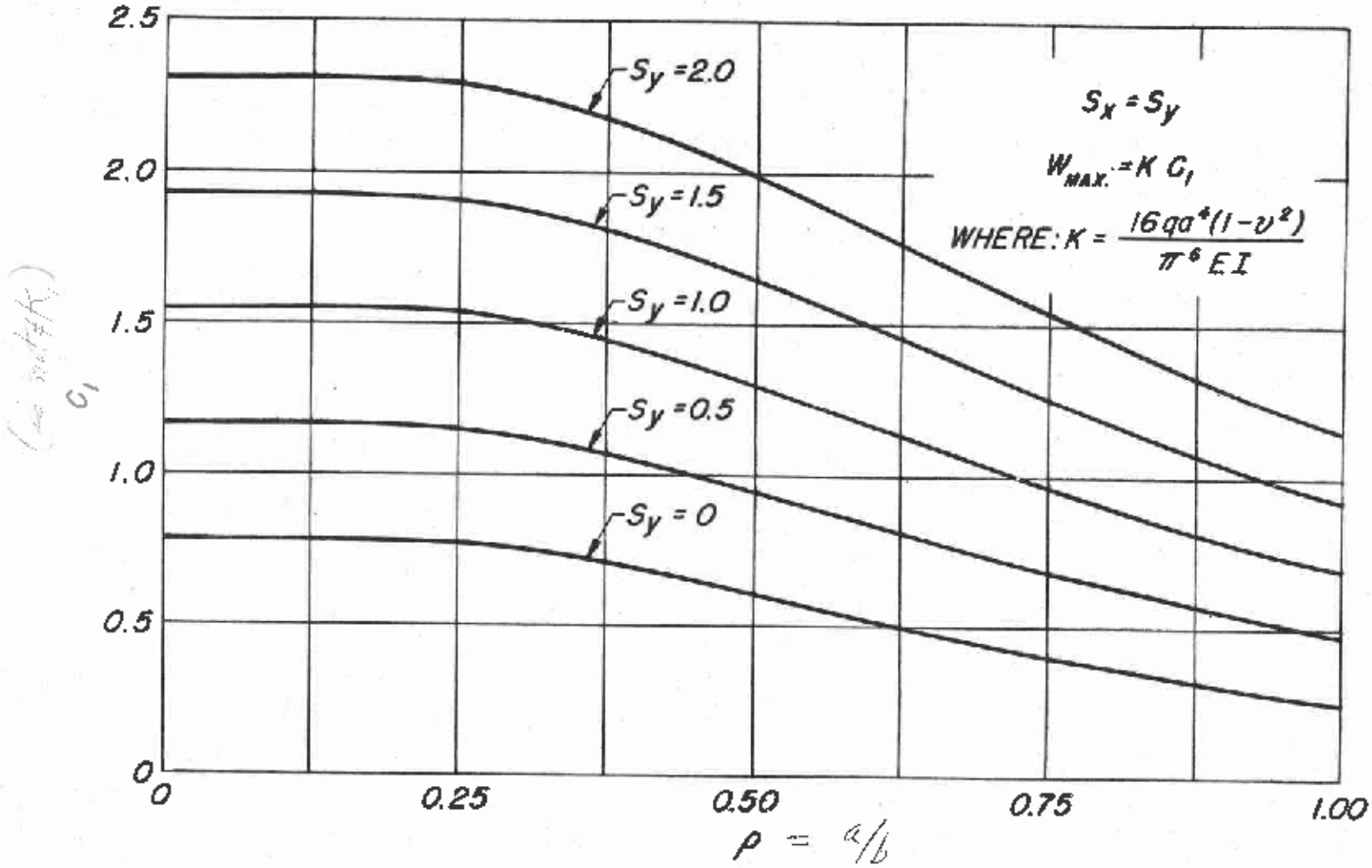

Figure 5. --Deflection coefficients versus length-width ratio for various values of S_y

107 203

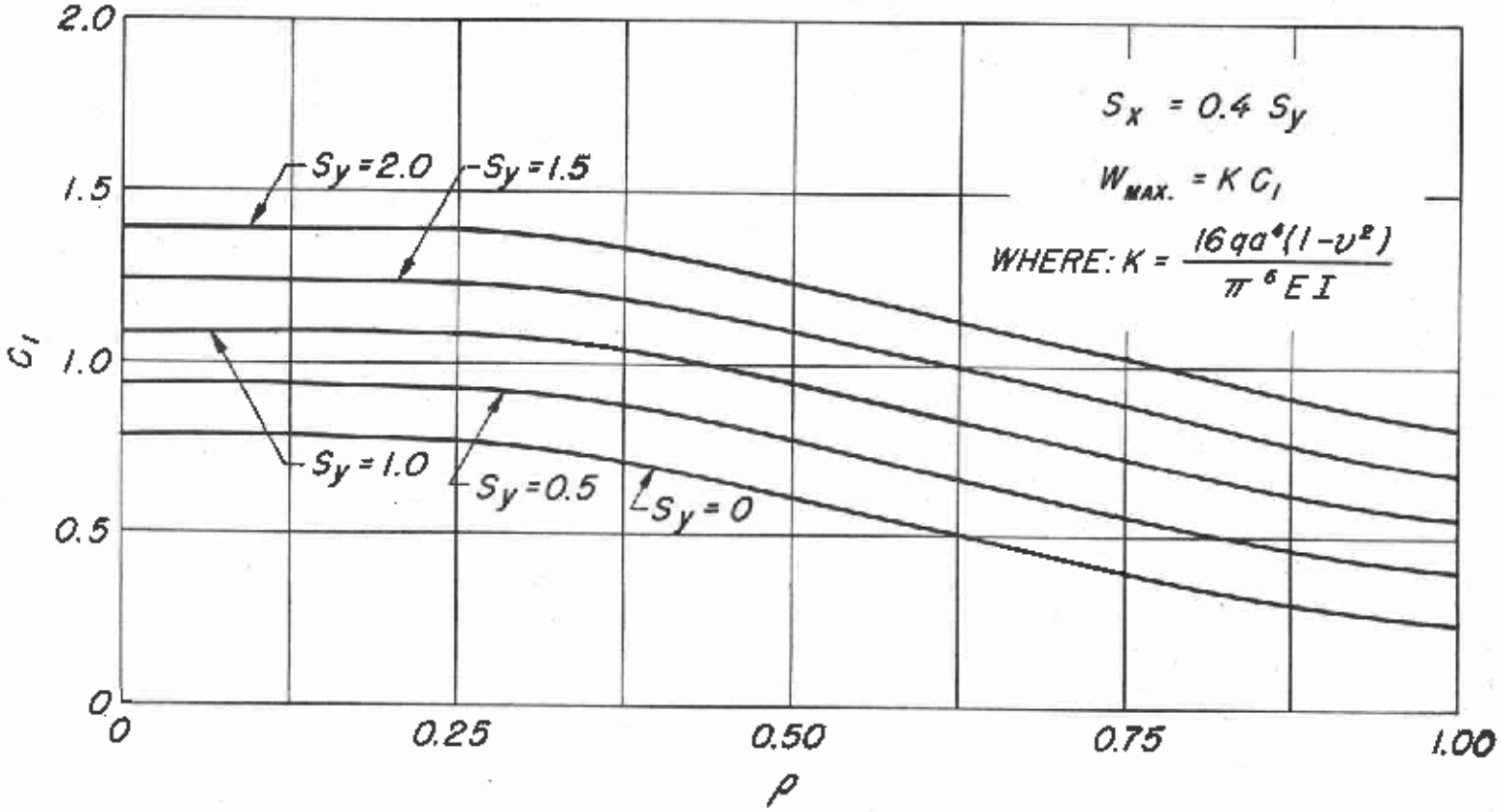

Figure 6. --Deflection coefficients versus length-width ratio for various values of S_y

N 107 204

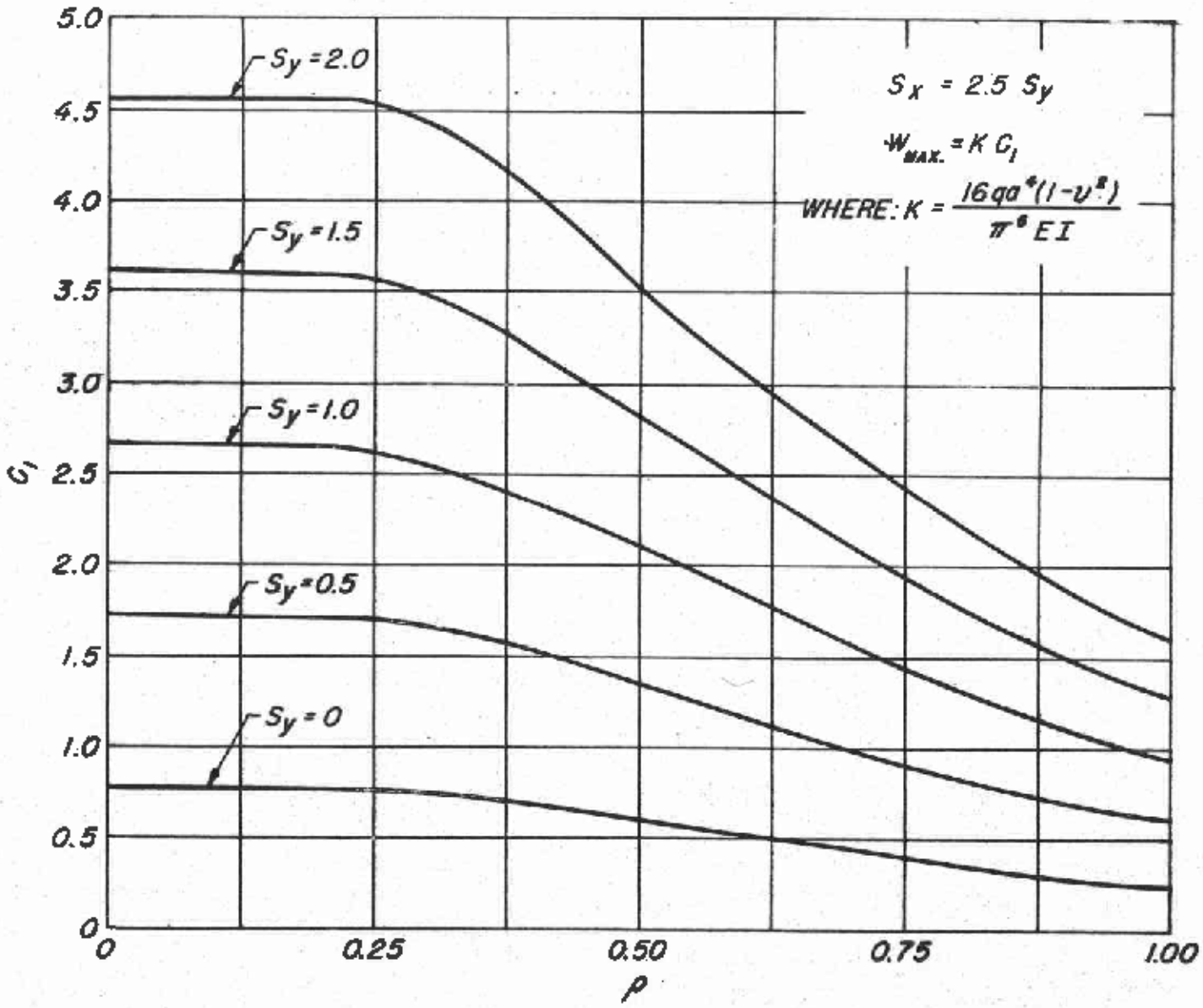

Figure 7. --Deflection coefficients versus length-width ratio for various values of S_y.

N 107 205

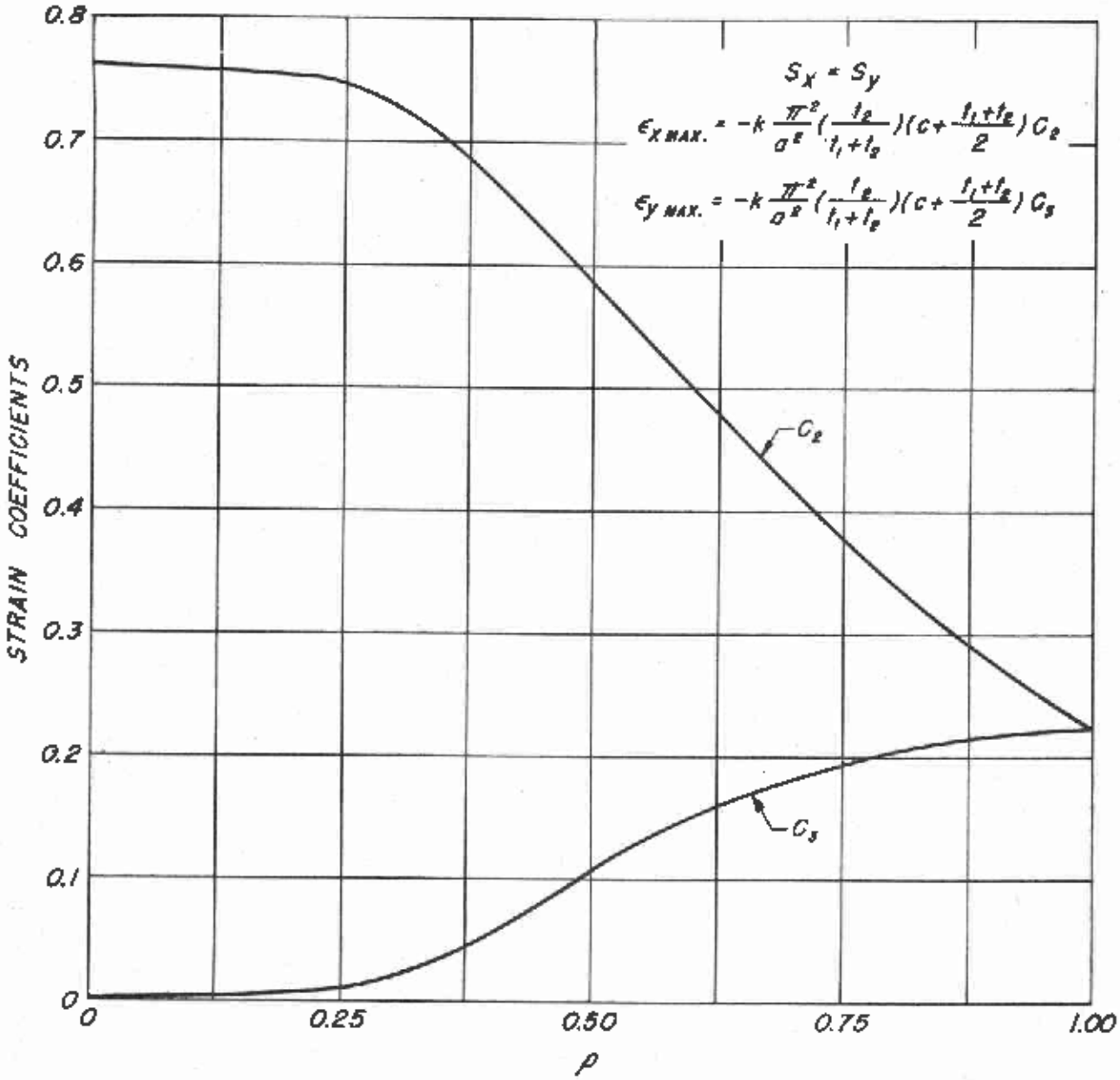

Figure 8. --Coefficients for determination of maximum normal strains in facings versus length-width ratio. When $S_x = S_y$, the strains are not dependent on the values of S_x and S_y.

K 107 206

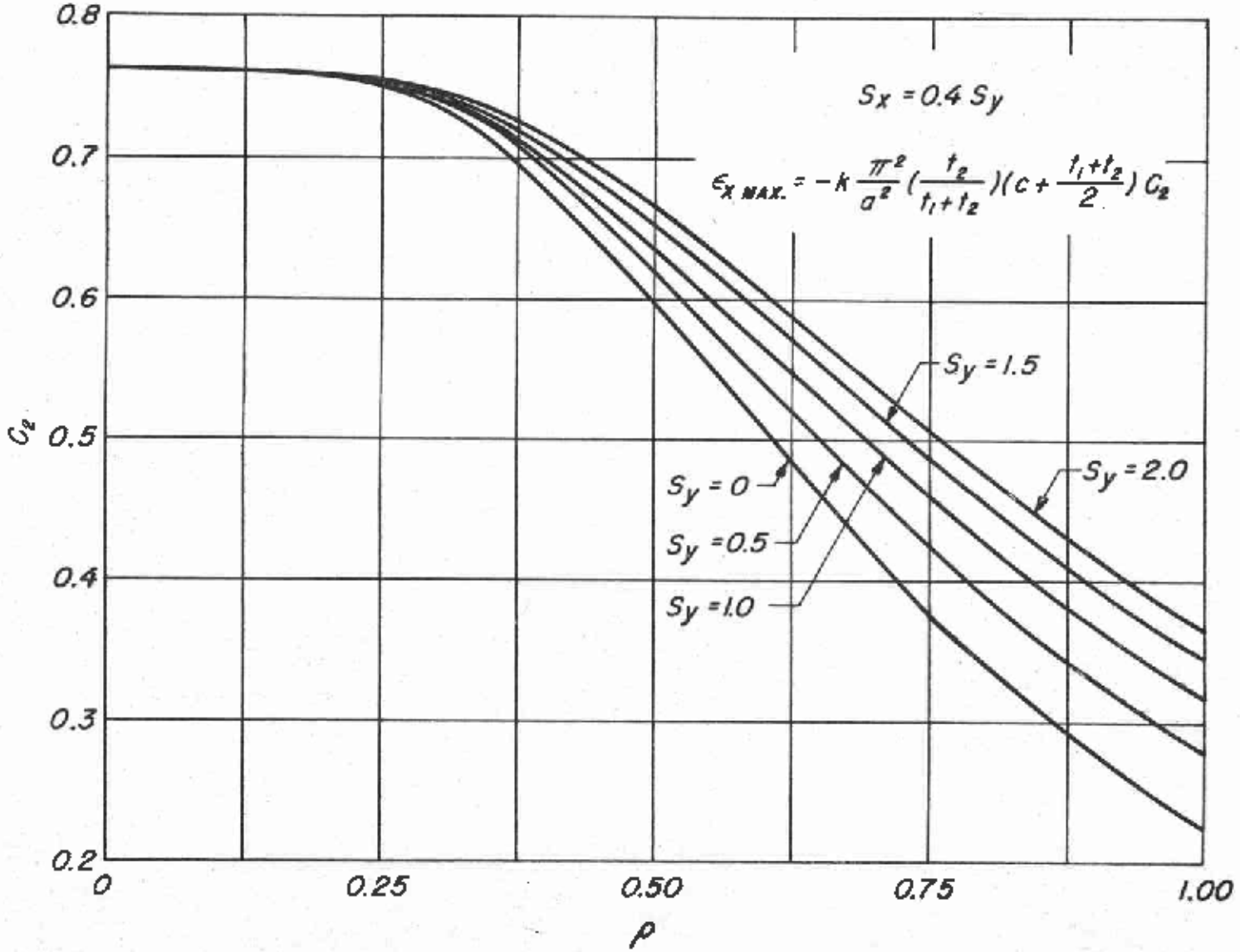

Figure 9. --Coefficient for strain in facings in x-direction versus length-width ratio for various values of S_y.

K 107 267

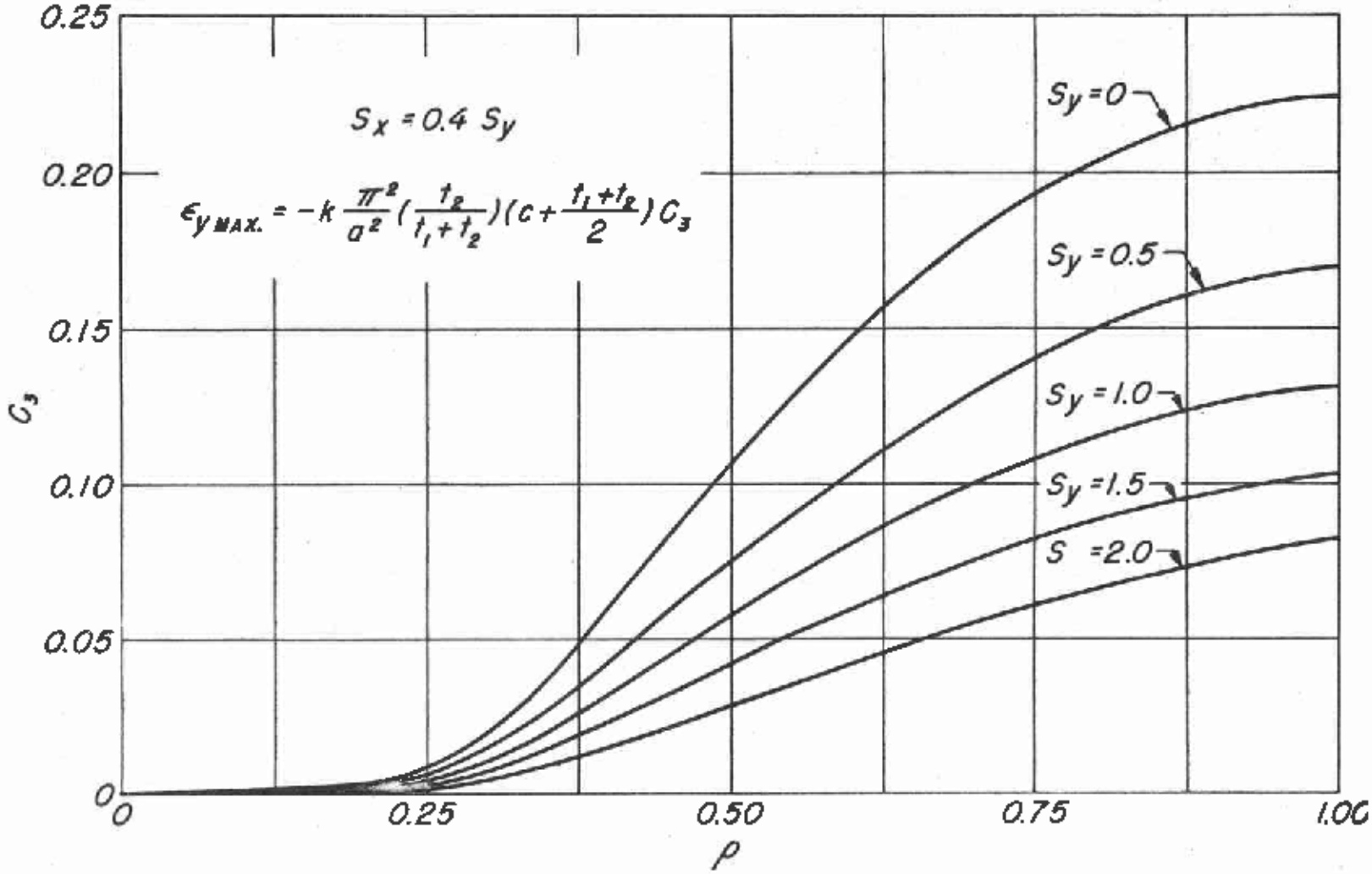

Figure 10. --Coefficient for strain in facings in y-direction versus length-width ratio for various values of S_y.

M 107 208

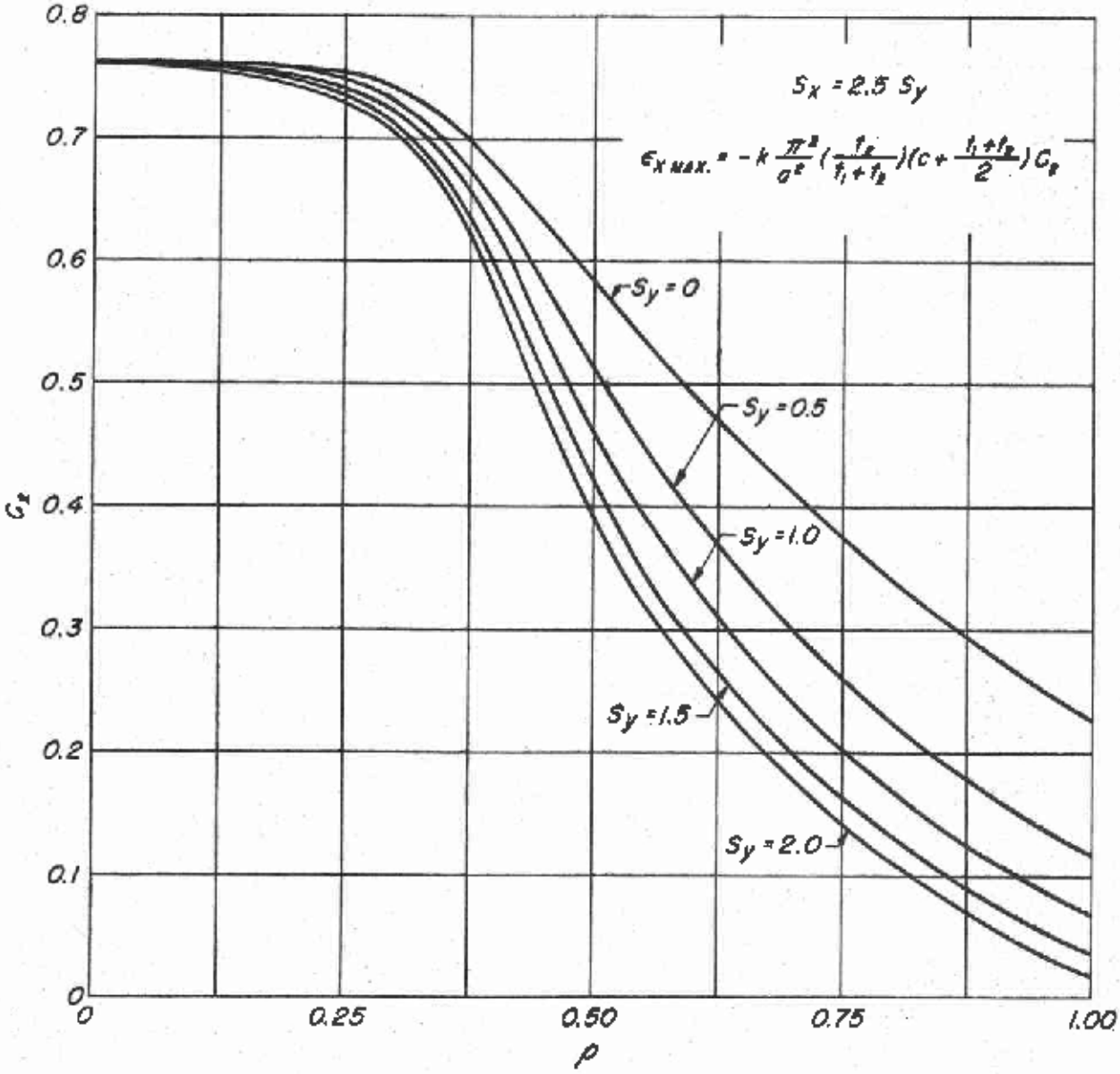

Figure 14. --Coefficient for strain in facings in x-direction versus length-width ratio for various values of S_y.

N 107 209

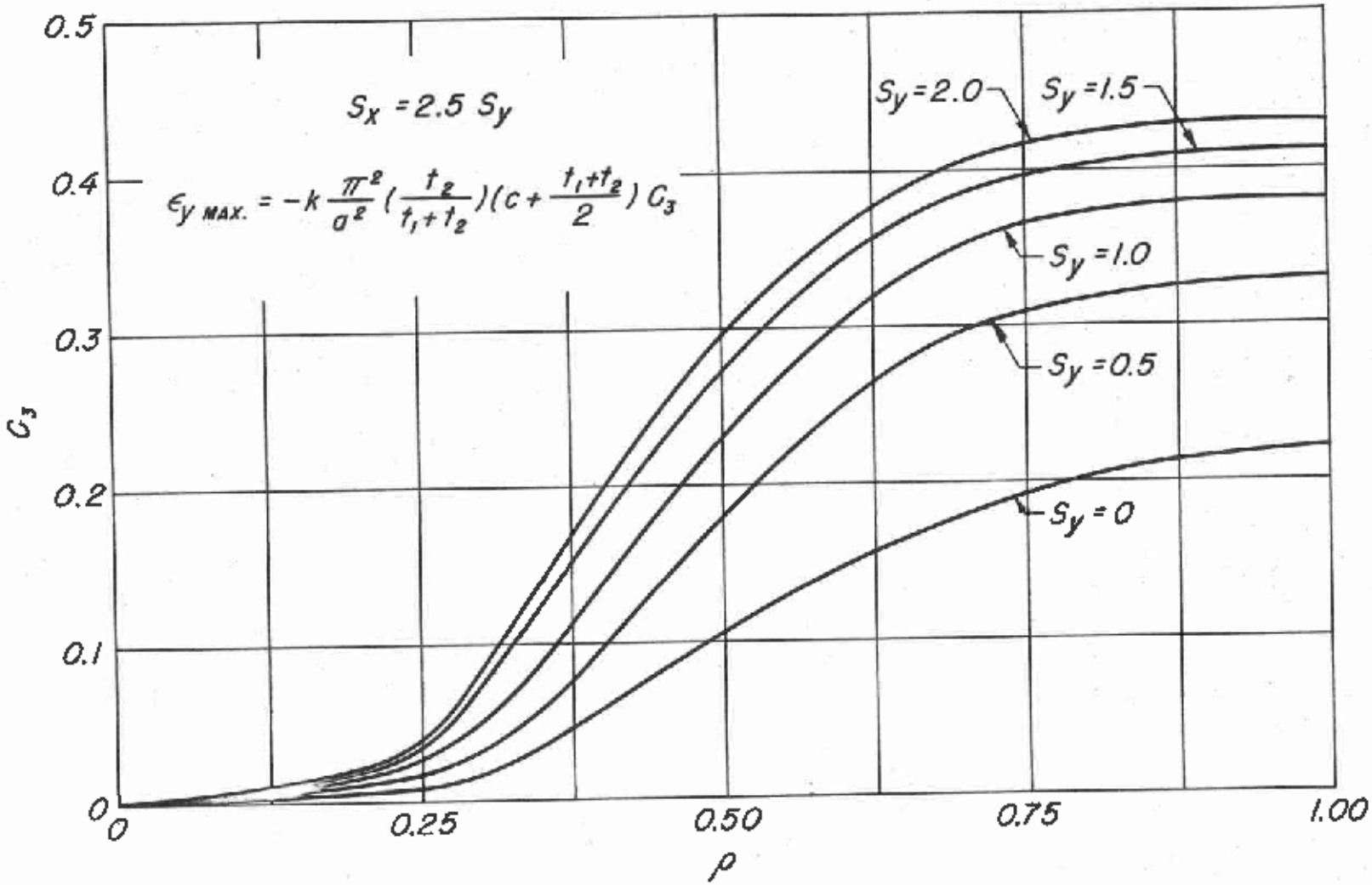

Figure 12. --Coefficient for strain in facings in y-direction versus length-width ratio for various values of S_y.

K 107 210

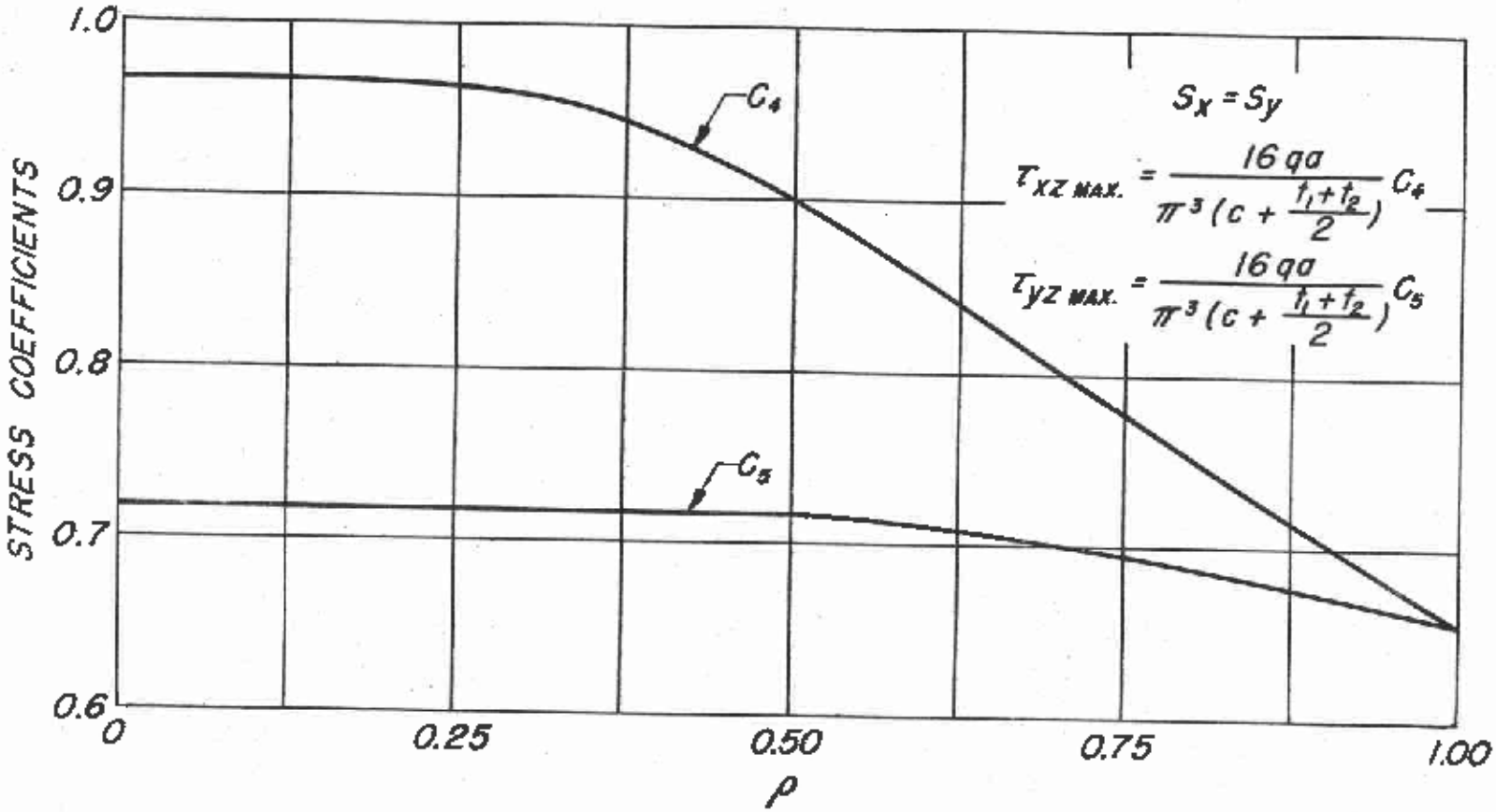

Figure 13. --Coefficients for shear stress in core versus length-width ratio. Shear stresses in core are independent of S_x and S_y when $S_x = S_y$.

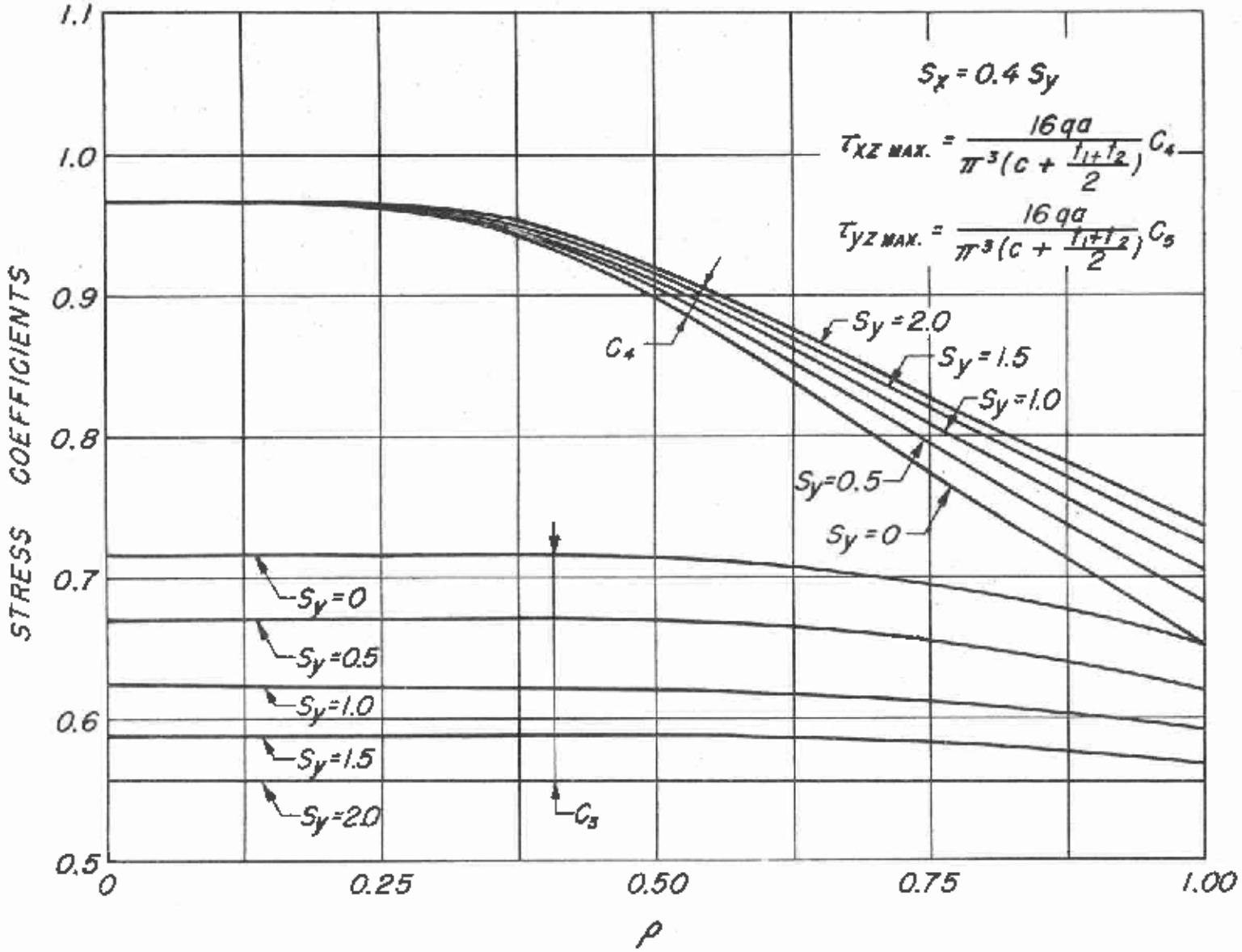

Figure 14. --Coefficients for shear stress in core versus length-width ratio.

M 107 212

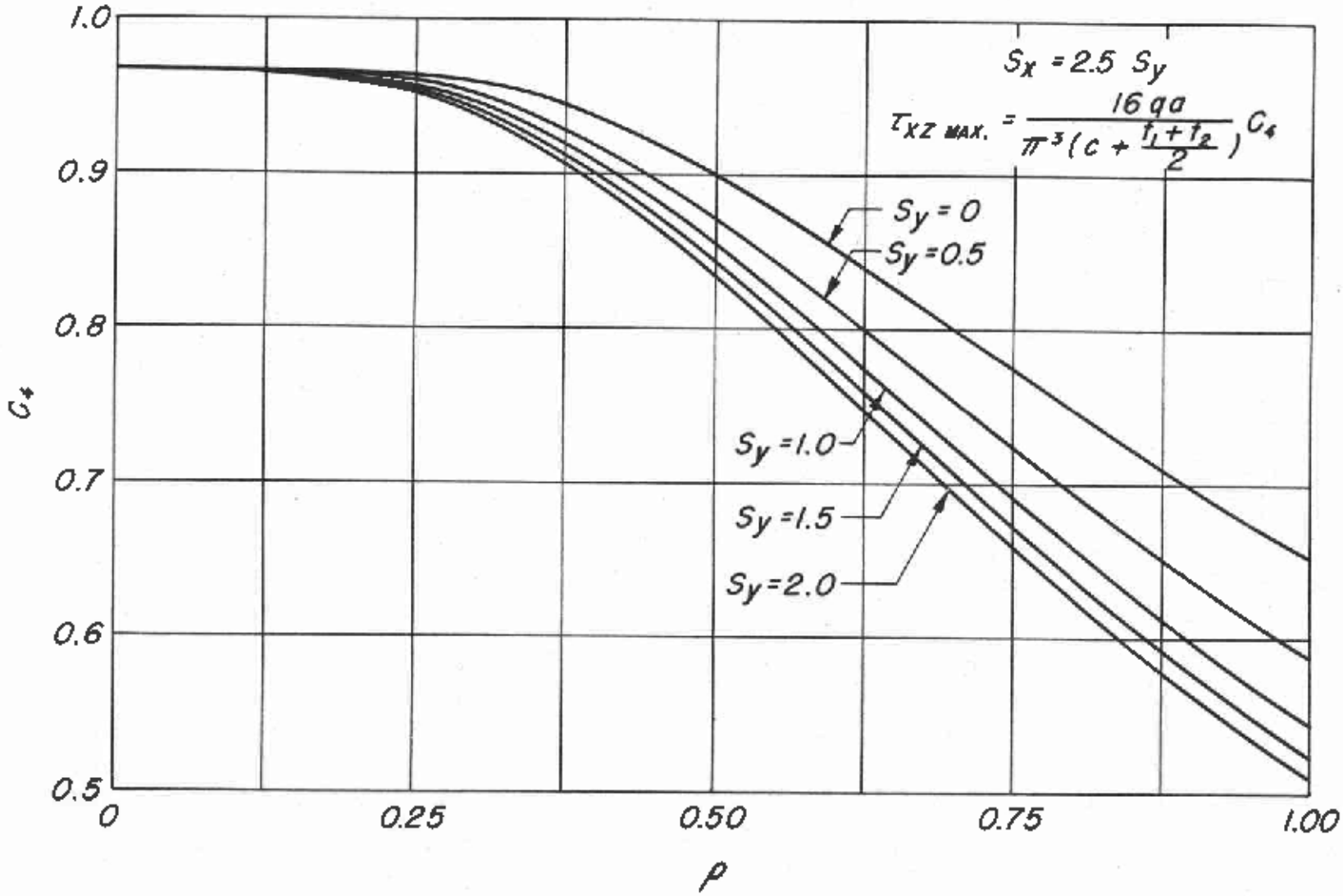

Figure 15.--Coefficients for shear stress, τ_{xz}, in core versus length-width ratio for various values of S_y.

N 107 213

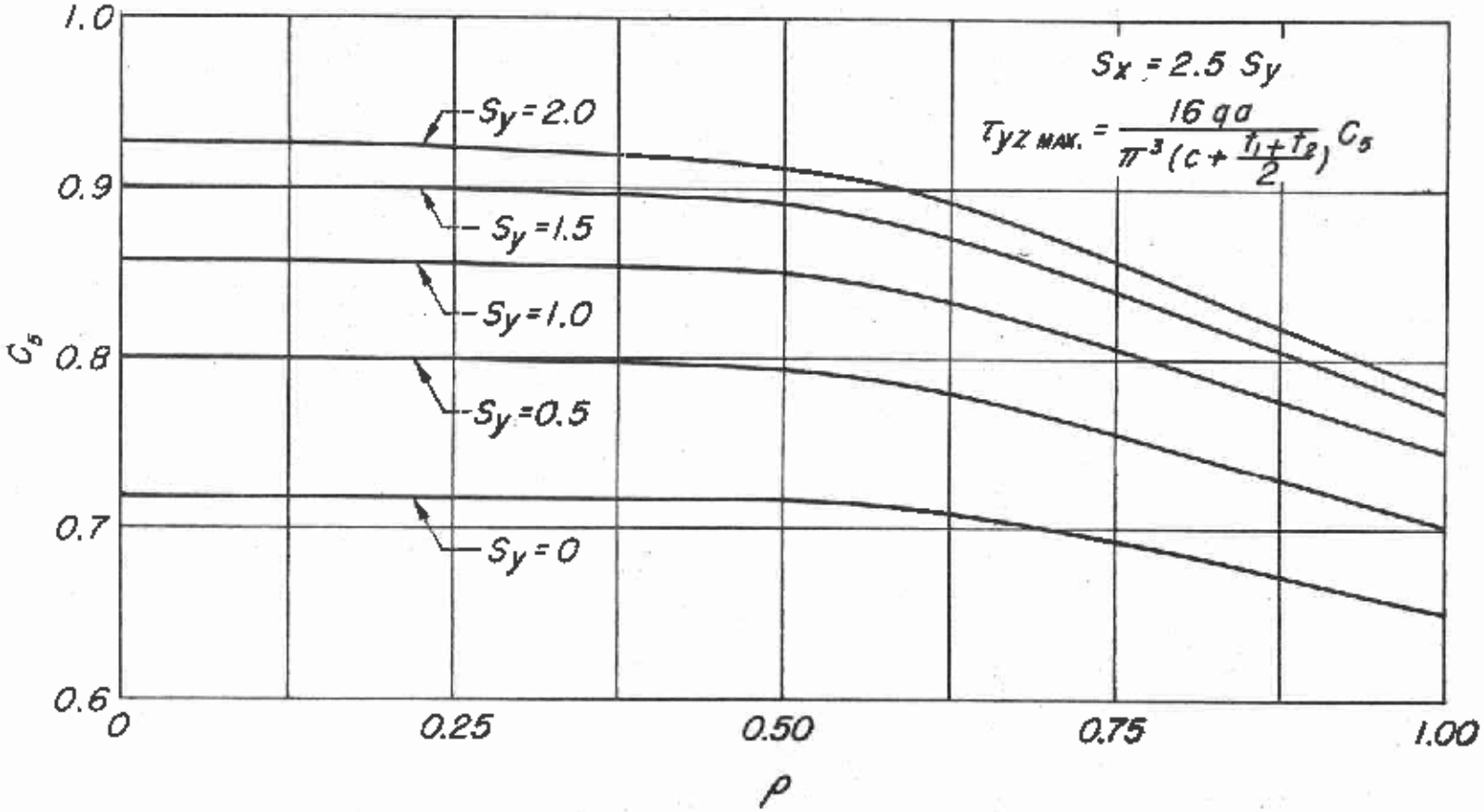

Figure 16. --Coefficients for shear stress, τ_{yz}, in core versus length-width ratio for various values of S_y.

N 107 214

FPL FILING SYSTEM DESIGNATION--S-5-4

Raville, Milton E.
Deflection and stresses in a uniformly loaded, simply supported rectangular sandwich plate. 2d ed. Madison, Wis., U.S. Forest Products Laboratory, 1962.
35 p., illus. (F.P.L. rpt. no. 1847)

Presents a theoretical solution for the deflection and stresses in a uniformly loaded, simply supported, rectangular sandwich plate.

Raville, Milton E.
Deflection and stresses in a uniformly loaded, simply supported rectangular sandwich plate. 2d ed. Madison, Wis., U.S. Forest Products Laboratory, 1962.
35 p., illus. (F.P.L. rpt. no. 1847)

Presents a theoretical solution for the deflection and stresses in a uniformly loaded, simply supported, rectangular sandwich plate.

Raville, Milton E.
Deflection and stresses in a uniformly loaded, simply supported rectangular sandwich plate. 2d ed. Madison, Wis., U.S. Forest Products Laboratory, 1962.
35 p., illus. (F.P.L. rpt. no. 1847)

Presents a theoretical solution for the deflection and stresses in a uniformly loaded, simply supported, rectangular sandwich plate.

Raville, Milton E.
Deflection and stresses in a uniformly loaded, simply supported rectangular sandwich plate. 2d ed. Madison, Wis., U.S. Forest Products Laboratory, 1962.
35 p., illus. (F.P.L. rpt. no. 1847)

Presents a theoretical solution for the deflection and stresses in a uniformly loaded, simply supported, rectangular sandwich plate.